GENERAL NOTES

GENERAL REQUIREMENTS

A.

1. ALL WORK SHALL CONFORM TO THE REQUIREMENTS OF THE 2001 EDITION OF THE CALIFORNIA BUILDING CODE (TITLE 24) WHICH ADOPTS THE 1997 UNIFORM BUILDING CODE (UBC) UNIFORM MECHANICAL CODE (UMC) AND UNIFORM PLUMBING CODE (UPC) 1996 NATIONAL ELECTRICAL CODE (NEC).

1A. SUBMITTAL DOCUMENTS FOR DEFERRED SUBMITTAL ITEMS SHALL BE SUBMITTED TO THE ARCHITECT OR ENGINEER OF RECORD, WHO SHALL REVIEW THEM AND FORWARD THEM TO THE BUILDING OFFICIAL WITH A NOTATION INDICATING THAT THE DEFERRED SUBMITTAL DOCUMENTS HAVE BEEN REVIEWED AND THAT THEY HAVE BEEN FOUND TO BE IN GENERAL CONFORMANCE WITH THE DESIGN OF THE BUILDING.

THE DEFERRED SUBMITTAL ITEMS SHALL NOT BE INSTALLED UNTIL THEIR DESIGN AND SUBMITTAL DOCUMENTS HAVE BEEN APPROVED BY THE BUILDING OFFICIAL.

LIST OF DEFERRED SUBMITTAL ITEMS:
1. STOREFRONT GLAZING. 3. MECH. UNIT ANCHORAGE
2. FIRE SPRINKLERS 4. ALUMINUM SUNSCREEN.

1B. SOILS COMPACTION REPORT AND THE SOILS ENGINEER'S ROUGH GRADING CERTIFICATE SHALL BE ON FILE WITH THE BUILDING AND SAFETY DIVISION PRIOR TO THE ISSUANCE OF A BUILDING PERMIT.

1C. VERIFICATION OF LOCAL CITY WATER DISTRICT APPROVAL SHALL BE SUBMITTED TO THE BUILDING AND SAFETY DIVISION PRIOR TO THE ISSUANCE OF A PLUMBING PERMIT FOR THIS PROJECT.

1D. N/A

1E. APPROVAL OF THESE PLANS BY THE BUILDING DEPARTMENT DOES NOT INCLUDE APPROVAL FOR ANY TYPE OF ALARM SYSTEM THAT MAY BE SHOWN OR REQUIRED. SEPARATE APPROVALS FOR ANY ALARM SYSTEM MUST BE OBTAINED.

2. SPECIFICATIONS, BOUND SEPARATELY, ARE PART OF THESE CONTRACT DOCUMENTS.

3. CONTRACTOR SHALL VERIFY AND BE RESPONSIBLE FOR ALL DIMENSIONS AND CONDITIONS ON THE JOB SITE AND SHALL NOTIFY THE ARCHITECT OF ANY DISCREPANCIES IMMEDIATELY BEFORE COMMENCING ANY WORK. IN NO CASE SHALL DIMENSIONS BE SCALED FROM DRAWINGS.

4. CONTRACTOR SHALL CHECK AND VERIFY SIZE AND LOCATION OF DUCT OPENINGS AND PLUMBING RUNS WITH MECHANICAL CONTRACTOR BEFORE FRAMING WALLS, FLOORS, ETC.

5. DIMENSIONS ON DRAWINGS ARE SHOWN TO CENTER LINES OF COLUMNS AND TO FINISH FACE OF WALLS AND PARTITIONS UNLESS NOTED OTHERWISE.

6. ALL SYMBOLS AND ABBREVIATIONS USED ON THE DRAWINGS ARE CONSIDERED TO BE CONSTRUCTION STANDARDS. IF THE CONTRACTOR HAS QUESTIONS REGARDING SAME OR THEIR EXACT MEANING, THE ARCHITECT SHALL BE NOTIFIED FOR CLARIFICATION.

7. CEILING HEIGHT DIMENSIONS ARE TO FINISHED SURFACES, UNLESS OTHERWISE NOTED.

8. FINISH FLOOR ELEVATIONS ARE TO TOP OF CONCRETE, UNLESS OTHERWISE NOTED.

9. DETAILS MARKED "TYPICAL" SHALL APPLY IN ALL CASES UNLESS SPECIFICALLY INDICATED OTHERWISE.

10. THE OWNER SHALL HAVE AN INDEPENDENT ROOFING INSPECTOR CONDUCT A PRE-ROOFING MEETING AND VERIFY JOB CONDITIONS AND MANUFACTURER'S REQUIREMENTS PRIOR TO INSTALLATION OF ROOFING. THE ROOFING INSPECTOR SHALL ISSUE A REPORT ON THEIR FINDINGS AND RECOMMENDATIONS TO THE ARCHITECT, GENERAL CONTRACTOR AND OWNER. THE ROOFING INSPECTOR SHALL MEET PERIODICALLY WITH THE GENERAL CONTRACTOR, ROOFING SUB-CONTRACTOR AND MANUFACTURER'S REPRESENTATIVES DURING THE ROOFING INSTALLATION TO VERIFY THAT THE ROOFING IS BEING INSTALLED ON ACCEPTABLE SUBSTRAIT AND THE ROOFING ASSEMBLY IS BEING INSTALLED IN ACCORDANCE TO THE MANUFACTURER'S REQUIREMENTS AND RECOMMENDATIONS.

11. A SEPARATE PERMIT MAY BE REQUIRED FOR SITE WALLS/ RETAINING WALLS TRASH ENCLOSURES, LANDSCAPE WALLS, FENCES/GATES, EXTERIOR STAIRS, LIGHT POLE BASES AND SIGNS, VERIFY WITH LOCAL GOVERNING AGENCY.

B. MISCELLANEOUS

1. GLASS DOORS, ADJACENT PANELS, AND ALL GLAZED OPENINGS WITHIN 18 INCHES OF THE ADJACENT FLOOR SHALL BE OF GLASS APPROVED FOR IMPACT HAZARD.
2. ALL REQUIRED RE-WORK AND REPAIR OF DAMAGE ON AND OFF PUBLIC PROPERTY (ALLEY, SIDEWALKS, DRIVEWAYS, CURBS, STREETS, ETC.) SHALL BE DONE ACCORDING TO GOVERNING REGULATIONS. MATCH AND PATCH THIS WORK CONSISTENT WITH APPLICABLE REGULATIONS AND BLEND INTO EXISTING ADJOINING CONDITIONS.
3. STORAGE, DISPENSING, OR USE OF ANY FLAMMABLE LIQUIDS, FLAMMABLE GASES, OR HAZARDOUS CHEMICALS SHALL COMPLY WITH UNIFORM FIRE CODE REQUIREMENTS.
4. PRIOR TO THE POURING OF CONCRETE, A REPRESENTATIVE OF THE CONSULTING GEOTECHNICAL ENGINEER SHALL INSPECT AND APPROVE OF THE FOOTING EXCAVATIONS.
5. ALL DOOR SIZES SHOWN ON THE DOOR SCHEDULE ARE DOOR OPENING SIZES. ALLOWANCE FOR THRESHOLDS AND STOPS SHALL BE TAKEN INTO CONSIDERATION PRIOR TO DOOR FABRICATION AND INSTALLATION. ALL DOORS AND FRAMES SHALL BE REINFORCED AS REQUIRED FOR CLOSURES, STOPS AND HARDWARE , AS SPECIFIED OR REQUIRED FOR THE PROPER INSTALLATION OF THE DOOR ASSEMBLY. NO THRU BOLTING OF DOORS IS PERMITTED.
6. DOOR OPENINGS IN GYPSUM BOARD PARTITIONS NOT DIMENSIONED ARE TO BE LOCATED IN THE CENTER OF THE SPACE OR WITHIN 6" OF ADJOINING PARTITIONS. MAINTAIN MIN. REQUIRED LATCH SIDE CLEARANCE REQUIRED BY CACT-24.
7. IDENTIFICATION OR POSTING OF REQUIRED FIRE ACCESS SHALL BE PROVIDED AS DIRECTED BY FIRE DEPT.

C. PARTITIONS

1. GYPSUM BOARD USED IN THE TOILET ROOMS, JANITOR CLOSETS AND MECHANICAL EQUIPMENT ROOMS SHALL BE WATER RESISTANT.
2. CONTRACTOR SHALL PROVIDE AND INSTALL ALL STIFFENERS, BRACING, BACK-UP PLATES AND SUPPORTING BRACKETS REQUIRED FOR THE INSTALLATION OF ALL CASEWORK, STAIR RAILINGS, TOILET ROOM ACCESSORIES AND PARTITIONS AND OF ALL WALL MOUNTED OR SUSPENDED MECHANICAL, ELECTRICAL OR MISCELLANEOUS EQUIPMENT.
3. OFFSET STUDS WHERE REQUIRED SO THAT FINISH WALL SURFACE WILL BE FLUSH.
4. ALL FRAMING MEMBERS SHALL BE ARRANGED AND SPACED AS REQUIRED TO PERMIT INSTALLATION OF PIPE, CONDUITS AND DUCTWORK WITH A MINIMUM OF CUTTING.
5. INSTALL METAL CORNER BEADS AT ALL EXPOSED WALLBOARD EDGES. INSTALL CASING BEADS WHEREVER WALLBOARD, PLASTER, ETC. ABUTS A DISSIMILIAR FINISH MATERIAL AND PROVIDE SEALANT AS REQUIRED.
6. FURNISH AND INSTALL ACCESS DOORS AND PANELS, FIRE DAMPERS, ETC. IN CEILING AND WALL CONSTRUCTION AS REQUIRED FOR THE INSTALLATION OF AND ACCESS TO MECHANICAL, PLUMBING, AND ELECTRICAL WORK. PROVIDE RATED ASSEMBLIES IN RATED WALLS AND CEILINGS. LOCATION OF ACCESS PANELS SHALL BE SUBMITTED TO THE ARCHITECT FOR REVIEW AND APPROVAL PRIOR TO INSTALLATION.
7. ALL EQUIPMENT RECESSED INTO FIRE RATED WALLS SHALL BE PROVIDED WITH BACKING AS REQUIRED TO MAINTAIN THE FIRE RATING OF THAT WALL.

D. STAIRS, EXITS AND OCCUPANT LOADS

1. ALL EXIT DOORS SHALL BE OPERABLE FROM INSIDE WITHOUT USE OF A KEY OR ANY SPECIAL KNOWLEDGE.
2. ILLUMINATED EXIT SIGNS SHALL HAVE 6" LETTERS ON CONTRASTING BACKGROUND.
3. CONTRACTOR SHALL PROVIDE TEMPORARY EXIT SIGNS TO ASSURE A MEANS OF EGRESS DURING CONSTRUCTION.
4. EXIT DOORS MUST OPEN OVER A LANDING NOT MORE THAN 1/2" BELOW THE TOP OF THE THRESHOLD.
5. ALL EXIT DOORS SHALL SWING IN THE DIRECTION OF EXIT TRAVEL WHEN SERVING MORE THAN 50 OCCUPANTS.
6. PANIC HARDWARE SHALL BE PROVIDED ON EXIT DOORS SERVING ROOMS, CORRIDORS, OR STAIRWAYS HANDLING AN OCCUPANT LOAD OF 50 OR MORE PERSONS AND FROM ASSEMBLY AREAS.
7. EMERGENCY LIGHTING SHALL BE PROVIDED GIVING A VALUE OF ONE FOOT-CANDLE AT FLOOR LEVEL.
8. DOORS EQUIPPED WITH PANIC HARDWARE SHALL BE OPERABLE WITH MAXIMUM FORCE OF 15 LBS. APPLIED IN THE DIRECTION OF EGRESS TO THE BAR.
9. DOORS IN RATED WALLS SHALL CONSIST OF SELF-CLOSING, SELF-LATCHING, ASSEMBLIES WITH SMOKE AND DRAFT SEALS AT HEAD AND JAMBS. DOOR ASSEMBLY RATINGS SHALL BE AS INDICATED ON THE DOOR FINISH SCHEDULE. HOLD OPEN DEVICES ON RATED ASSEMBLIES SHALL BE MAGNETICALLY OPERATED AND ACTIVATED BY SMOKE DETECTORS.

E. FIRE RESISTIVE STANDARDS

1. ALL FIRE RATED ASSEMBLIES SHALL BE I.C.B.O. OR U.L. APPROVED AND PROVIDED AS INDICATED ON THE APPROVED DRAWINGS.
2. FIRE DAMPERS SHALL BE PROVIDED WHERE AIR DUCTS PENETRATE RATED WALL ASSEMBLIES.

FIRE DAMPERS WILL BE INSTALLED IN ALL DUCTS PENETRATING THE CORRIDOR WALLS AND/OR CEILING. DAMPERS SHALL COMPLY CBC SECTION 713.10.

F. FIRE EXTINGUISHING SYSTEMS AND REQUEST FOR INSPECTIONS

1. THIS BUILDING SHALL BE FULLY SPRINKLED. PROVIDE AN AUTOMATIC FIRE SPRINKLER SYSTEM. SPRINKLER SYSTEM PLANS SHALL BE SUBMITTED TO ARCHITECT, MECHANICAL ENGINEER AND FIRE DEPT. FOR APPROVAL PRIOR TO INSTALLATION. ANY CHANGES TO ACCOMODATE FIELD CONDITIONS SHALL BE RESUBMITTED TO ALL PARTIES FOR APPROVAL AND INCORPORATED WITH NO ADDITIONAL CHARGE TO OWNER. THE AUTOMATIC FIRE SPRINKLER SYSTEM IS REQUIRED TO BE MONITORED BY A U.L. OR F.M. APPROVED CENTRAL STATION.
2. FURNISH PORTABLE FIRE EXTINGUISHER WITH A RATING OF NOT LESS THAN 3A-40BC WITHIN 75 FEET TRAVEL DISTANCE TO ALL PORTIONS OF THE BUILDING ON EACH FLOOR, OR AS REQUIRED BY THE FIRE MARSHALL. FURNISH AND INSTALL PORTABLE FIRE EXTINGUISHER WITH A RATING NOT LESS THAN 20BC IN ALL MECHANICAL AND ELECTRICAL ROOMS OR AS REQUIRED BY THE FIRE MARSHALL.
3. SPRINKLER PLANS SHALL BE SUBMITTED TO AND APPROVED BY THE FIRE PREVENTION BUREAU UNDER SEPARATE PERMIT.
4. FINAL FIRE DEPARTMENT APPROVAL OF THE SHELL BUILDING DOES NOT CONSTITUTE AN APPROVAL FOR OCCUPANCY.

G. MECHANICAL/PLUMBING

1. SPRINKLER SYSTEM SHALL BE APPROVED BY THE LOCAL FIRE AUTHORITY PRIOR TO INSTALLATION.
2. CONTRACTOR SHALL VERIFY SIZES AND LOCATIONS OF ALL MECHANICAL EQUIPMENT PADS AND BASES AS WELL AS POWER AND WATER OR DRAIN INSTALLATIONS WITH EQUIPMENT MANUFACTURERS BEFORE PROCEEDING WITH THE WORK (MECHANICAL DRAWINGS ARE SCHEMATIC IN NATURE).
3. FOR LOCATION OF MECHANICAL EQUIPMENT PADS, SEE MECHANICAL DRAWINGS.
4. FOR LOCATION OF FLOOR DRAINS, FLOOR SINKS, MANHOLES AND SUMPS, SEE MECHANICAL DRAWINGS.
5. ALL DIFFUSERS AND GRILLES SHALL BE LOCATED TO FIT EXACTLY IN THE ACOUSTIC TILE MODULE.
6. EXPOSED LAVATORY PIPING SHALL BE INSULATED.

H. ELECTRICAL

1. FURNISH AND INSTALL EMERGENCY LIGHTING AS SPECIFIED AND INDICATED BUT IN NO CASE SHALL THE LIGHT LEVEL BE LESS THAN ONE FOOT-CANDLE AT FLOOR LEVEL IN ALL EXIT CORRIDORS AND STAIR SHAFTS.
2. LIGHTED EXIT SIGNS WITH MINIMUM OF 6 INCH HIGH LETTERS SHALL BE POSTED ABOVE EXITS IN ACCORDANCE WITH LOCAL CODES OR SHALL CONFORM TO THE U.B.C. LOW LEVEL EXIT SIGNS SHALL BE INSTALLED IN ACCORDANCE WITH STATE OF CALIFORNIA BUILDING CODE.

ABBREVIATIONS

STANDARD ABBREVIATIONS

ACT	acoustical tile	JT	joint
ADD	addendum	KO	knockout
AGG	aggregate	LAB	laboratory
A/C	air conditioning	LAM	laminate (d)
ALT	alternate	LAV	lavatory
ALUM	aluminum	LT	light
AB	anchor bolt	LTWT	lightweight
ANOD	anodized	LL	live load
ARCH	architect (ural)	MFR	manufacture (er)
AD	area drain	MAS	masonry
AUTO	automatic	MO	masonry opening
BMST	basement	MAX	maximum
BM	bench mark	MECH	mechanical
BLK	block	MED	medium
BLKG	blocking	MET, MTL	metal
BD	board	MM	millimeter (s)
BOT	bottom	MIN	minimum
BLDG	building	MISC	miscellaneous
BUR	built-up roofing	MULL	mullion
CAB	cabinet	NAT	natural
CPT	carpet (ed)	NOM	nominal
CI	cast iron	NIC	not in contact
CIPC	cast-in-place concrete	NTS	not to scale
CB	catch basin	OC	on center (s)
CLG	ceiling	OPG	opening
CEM	cement	OPP	opposite
CM	centimeter	OPH	opposite hand
CT	ceramic tile	OD	outside diameter
CLR	clear (ance)	OA	overall
COL	column	OH	overhead
CONC	concrete	PATT	pattern
CMU	concrete masonry unit	PNT	paint (ed)
CONST	construction	PNL	panel
CONT	continuous or continue	PVMT	pavement
CONTR	contract (or)	PERF	perforate (d)
CJT	control joint	PLAS	plaster or plastic
CTR	counter or center	PLWD	plywood
DPR	damper	PT	point
DL	dead load	PCC	precast concrete
DTL	detail	PL	property line
DIAG	diagonal	P-LAM.	plastic laminate
DIAM	diameter	QT	quarry tile
DIM	dimension	R	rise
DR	door	RAD	radius
DWG	drawing	REF	reference
DF	drinking fountain	RCP	reinf. concrete pipe
ELEC	electric (al)	RET	return
EWC	electric water cooler	RA	return air
EL	elevation	REV	revision (s), (revised)
ELEV	elevator	RD	roof drain
EMER	emergency	RFG	roofing
EQ	equal	RM	room
EST	estimate	RO	rough opening
EXH	exhaust	RF	rubber floor
EXP	exposed	RB	rubber base
EXT	exterior	SECT	section
FOC	face of concrete	SHT	sheet
FOF	face of finish	SIM	similar
FOM	face of masonry	SC	solid core
FOS	face of studs	SPEC	specification (s)
FF	factory finish	SQ	square
FIN	finish (ed)	SS	stainless steel
FFE	finished floor elevation	STD	standard
FFL	finished floor line	STA	station
FE	fire extinguisher	ST	steel
FEC	fire extinguisher cabinet	SD	storm drain
FHS	fire hose station	STRUCT	structural
FLR	floor (ing)	SA	supply air
FD	floor drain	SUSP	suspended
FLUR	fluorescent	SYM	symmetry (ical)
FTG	footing	SYS	system
FND	foundation	TEL	telephone
FUR	furred (ing)	THK	thick (ness)
FUT	future	T&G	tongue & groove
GA	gauge	TOP	top of parapet
GALV	galvanized	TOSB	top of slab
GI	galvanized iron	TOS	top of steel
GC	general contract	TOW	top of wall
GL	glass, glazing	T	tread
GD	grade (ing)	TYP	typical
GYP	gypsum	UR	urinal
HDW	hardware	VERT	vertical
HDR	header	VF	vinyl fabric
HVAC	heating/ventilating	VT	vinyl tile
HT	height	VCT	vinyl composition tile
HC	hollow core	VWF	vinyl wall fabric
HM	hollow metal	VWC	vinyl wall covering
HORIZ	horizontal	WST	wainscot
HB	hose bibb	WC	water closet
INCL	include (d), (ing)	WP	water proofing
ID	inside diameter	WWM	welded wire mesh
		WO	without
		WD	wood
		WIN	window

SPECIAL INSPECTIONS

A. REQUIRED SPECIAL INSPECTIONS

1. IN ADDITION TO THE REGULAR INSPECTIONS, THE FOLLOWING ITEMS WILL ALSO REQUIRE SPECIAL INSPECTIONS IN ACCORDANCE WITH SECTION 1701 OF THE UNIFORM BUILDING CODE:

SOILS:
1. FOOTINGS.
2. BACKFILL AND COMPACTION OF UTILITY TRENCHES.

STRUCTURAL:
1. CONCRETE OVER 2500 PSI.
2. FIELD WELDING.
3. MASONRY

PROJECT DATA

OWNER :

CITY OF FONTANA
8353 SIERRA AVE.
FONATANA, CA. 92335

PROJECT ADDRESS:

8353 SIERRA AVE.
FONTANA, CALIFORNIA

BUILDING DATA :

BUILDING CODE : 2001 CALIFORNIA BUILDING CODE (CBC)
2004 CEC (2002 NEC)
2005 ENERGY STANDARDS CBC SECTION 106.3.3

CONSTRUCTION: V - N
OCCUPANCY: B: OFFICE
SPRINKLERED: YES

Basic Allowable Areas:

UBC TABLE 5-B BASIC ALLOW. AREA:	8,000 S.F.
MULTISTORY INCREASE (100%)	16,000 S.F.
AREA INCREASE 3 SIDE YARDS (100%)	32,000 S.F.
AREA INCREASE SPRINKLERS (100%)	72,000 S.F.

PROPOSED AREA:

EXISTING CITY HALL	30,600 S.F.
PROPOSED ADDITION:	27,052 S.F.
TOTAL AREA:	57,652 S.F.

Fire Resistive Construction Per Table 6A

Exterior Bearing Walls	NR	Permanent Partitions	NR
Interior Bearing Walls	NR	Shafts	1HR
Exterior non-Bearing Walls	NR	Floors	NR
Structural Frame	NR	Roof	NR

PARKING ANALYSIS

EXISTING CITY HALL:	30,600 S.F.
NEW DSO BUILDING:	27,052 S.F.
TOTAL:	57,652 S.F.
PARKING REQUIRED:	1/200 S.F. = 289 CARS
PARKING PROVIDED:	143 CARS
Site:	143 CARS
HC Stalls:	6 (Included in total)

CONSULTANTS

ARCHITECT
LANGDON WILSON ARCHITECTURE
18800 Von Karman Avenue # 200
Irvine, CA 92612
(949) 833-9193

STRUCTURAL
KPFF
18400 Von Karman Ave., Suite 100
Irvine, CA 92618
(949) 252-1022

MECHANICAL / PLUMBING
TKSC ENGINEERING
17911 Von Karman Ave., Suite 250
Irvine, CA 92614
Tel. (949) 756-0565

ELECTRICAL
GLP ENGINEERING
1751 E. Garry Ave.
Newport Beach, CA 92660
Tel. (949) 852-9995

LANDSCAPE
Frank Radmacher Associates
14841 Yorba Street, Suite 204
Tustin, CA 92780
(714) 832-1774

CIVIL
INCLEDON KIRK ENGINEERS
3621 S. Harbor Blvd., Suite 100
Santa Ana, CA 92704
(949) 472-3505

AUDIO / VISUAL
VENEKLASEN ASSOCIATES
1711 Sixteenth Street
Santa Monica, Ca 90404
(310) 450-1733

DATA / TELEPHONE
PLANNET CONSULTING
3040 Saturn Street
Brea, Ca 92821
(714) 982-5800

ACOUSTICAL ENGINEER
PURCELL + NOPPE + ASSOCIATES
21408 Devonshire Street
Chatsworth, Ca 91311
(818) 882-7820

COST ESTIMATOR
ISKANDER ASSOCIATES, INC.
17821 E. Seventeenth Street
Tustin, Ca 92780
(714) 544-4214

SYMBOLS

- 4 — STRUCTURAL GRID NUMBER
- SECTION — 1: SECTION NUMBER; A4.00: SHEET WHERE SECTION IS DRAWN
- DETAIL — 1: DETAIL NUMBER; A4.12: SHEET WHERE DETAIL IS DRAWN (TYP.)
- INTERIOR ELEVATION — A, B, C, D: IDENTIFY ELEVATION BY ARROW; 1: ELEVATION NUMBER; A6.11: SHEET WHERE ELEVATION IS DRAWN
- WALL TYPES — 2A: WALL NUMBER
- FINISH SYMBOL — PT-10: FINISH NUMBER
- ACCESSORY SYMBOL — A: ACCESSORY NUMBER
- KEY NOTE SYMBOL — 1: KEYNOTE NUMBER
- DOOR SYMBOL — 1: DOOR NUMBER
- +100' T.O.S. — ELEVATION HEIGHT.
- WORK, CONTROL, OR DATUM POINT
- PROPERTY LINE
- +10'-0" — CEILING ELEVATION FROM FINISH FLOOR
- SP — START POINT OF CEILING GRID

MATERIALS LIST

- EARTH
- ROCK FILL
- SAND/MORTAR/PLASTER
- CONCRETE
- METAL — OMIT INDICATION IN THIN MATERIAL
- METAL LATH
- WOOD, FINISH
- WOOD, FRAMING — THROUGH MEMBER
- WOOD, FRAMING — INTERRUPTED MEMBER
- PLYWOOD
- GLASS — OMIT INDICATION IN THIN MATERIAL
- GYPSUM BOARD — OMIT DOUBLE LINES IN THIN MATERIAL
- ACOUSTICAL TILE
- BATT INSULATION
- RIGID INSULATION
- CERAMIC TILE
- NON-COMBUSTIBLE PARTITION
- 1-HOUR PARTITION

THESE PLANS ARE NOT VALID FOR LANDSCAPE IMPROVEMENTS (IRRIGATION SYSTEMS, ETC.) SEE APPROVED LANDSCAPE PLANS FROM THE LANDSCAPE DIVISION.

SHEET INDEX

ARCHITECTURAL
A001 GENERAL NOTES AND DATA
A101 OVERALL SITE PLAN
A102 NOT USED
A103 DEMOLITION PLAN
A104 TRASH ENCLOSURE / SECTIONS
A105 ENTRY CANOPY / SECTIONS
A106 PATIO PLAN
A201 FIRST FLOOR PLAN
A202 SECOND FLOOR PLAN
A203 ROOF PLAN
A221 FIRST FLOOR REFLECTED CEILING PLAN
A222 SECOND FLOOR REFLECTED CEILING PLAN
A231 FIRST FLOOR FURNITURE PLAN
A232 SECOND FLOOR FURNITURE PLAN
A241 FIRST FLOOR FINISH PLAN
A242 SECOND FLOOR FINISH PLAN
A310 EXTERIOR ELEVATIONS
A410 BUILDING SECTIONS
A411 BUILDING SECTIONS
A420 WALL SECTIONS
A421 WALL SECTIONS
A422 WALL SECTIONS
A423 WALL SECTIONS
A424 WALL SECTIONS
A430 EXTERIOR WALL DETAILS
A431 EXTERIOR WALL DETAILS
A432 MISC. DETAILS
A440 ROOF DETAILS
A510 ENLARGED FLOOR PLANS
A511 ENLARGED FLOOR PLANS
A610 ENLARGED STAIR PLANS/SECTIONS/DETAILS
A611 ENLARGED STAIR PLANS/SECTIONS/DETAILS
A630 ELEVATOR PLAN/ ENLARGED/ DETAILS
A710 INTERIOR ELEVATIONS
A711 INTERIOR ELEVATIONS
A712 INTERIOR ELEVATIONS
A713 INTERIOR ELEVATIONS
A714 INTERIOR ELEVATIONS
A715 INTERIOR ELEVATIONS
A720 CASEWORK ELEVATIONS
A721 CASEWORK ELEVATIONS
A722 CASEWORK DETIALS
A810 ROOM FINISH SCHEDULE
A820 DOOR SCHEDULE
A830 PARTITON TYPES / DETAILS
A910 TYP. CEILING DETAILS
A911 WALL DETAILS
A920 INTERIOR DETAILS

STRUCTURAL
S0.1 GENERAL NOTES, TYPICAL DETAILS.
S0.2 ABBREVIATIONS AND SYMBOLS
S2.1 FOUNDATION PLAN
S2.2 SECOND FLOOR FRAMING PLAN
S2.3 ROOF FRAMING PLAN
S3.1 PRECAST TILT-UP PANEL ELEVATIONS
S4.1 TYPICAL CONCRETE DETAILS
S4.2 TYPICAL CONCRETE DETAILS
S5.1 TYPICAL STEEL DETAILS
S5.2 TYPICAL STEEL DETAILS
S5.3 TYPICAL STEEL DETAILS
S5.4 TYPICAL STEEL DETAILS
S5.5 STEEL DETAILS
S5.6 STEEL BRACED FRAME ELEVATIONS & DETAILS
S6.1 TYPICAL PRECAST TILT-UP PANEL DETAILS
S6.2 TYPICAL PRECAST TILT-UP PANEL DETAILS
S7.1 TYPICAL METAL STUD DETAILS
S8.1 STAIR FRAMING PLAN
S8.2 STAIR DETAILS
S8.3 STAIR DETAILS

MECHANICAL
M0-1 LEGENDS, SCHEDULES AND NOTES
M2-1 FIRST FLOOR MECHANICAL PLAN
M2-2 SECOND FLOOR MECHANICAL PLAN
M2-3 ROOF PLAN
M5-1 DETAILS
M5-2 DETAILS
M6-1 WIRING
M6-2 CONTROLS

PLUMBING
P0-1 LEGEND, SCHEDULES AND NOTES
P1-1 SITE PLAN
P2-1 FIRST FLOOR PLUMBING PLAN
P2-2 SECOND FLOOR PLUMBING PLAN
P2-3 ROOF PLAN
P2-4 EXISTING BLDG PLUMBING PLAN
P3-1 ENLARGED PLUMBING PLAN
P5-1 DETAILS

ELECTRICAL
E001 SYMBOLS LIST
E002 FIXTURE SCHEDULE AND GENERAL NOTES
E003 SINGLE LINE DIAGRAM
E004 PANEL SCHEDULES
E005 ELEVATOR PLANS AND NOTES
E006 LIGHTING CONTROL DIAGRAM
E101 ELECTRICAL SITE PLAN
E102 ELECTRICAL DEMOLITION SITE PLAN
E201 FIRST FLOOR LIGHTING PLAN
E202 SECOND FLOOR LIGHTING PLAN
E301 FIRST FLOOR POWER AND SIGNAL PLAN
E302 SECOND FLOOR POWER & SIGNAL PLAN
E401 ROOF ELECTRICAL PLAN
E501 TITLE 24 DOCUMENTS

TELECOMMUNICATION
T001 TELECOMMUNICATIONS GENERAL NOTES
T101 TELECOMMUNICATIONS SITE PLAN
T201 TELECOMMUNICATIONS PLAN - GROUND FLOOR PLAN
T202 TELECOMMUNICATIONS PLAN - SECOND FLOOR PLAN
T301 TELECOMUNICATIONS - IDF ROOM PLAN
T401 TELECOMMUNICATIONS DETAILS

AUDIO/VISUAL
AV001 GENERAL NOTES, BOX SCHEDULE
AV002 ABBREVIATIONS, NOTES & SYMBOLS
AV101 AV GROUND FLOOR PLAN
AV102 AV SECOND FLOOR PLAN
AV201 FIRST FLOOR AV REFLECTED CEILING PLAN
AV202 SECOND FLOOR AV REFLECTED CEILING PLAN
AV001P GENERAL NOTES, BOX SCHEDULE
AV002P ABBREVIATIONS, NOTES & SYMBOLS
AV101P AV GROUND FLOOR PLAN
AV102P AV SECOND FLOOR PLAN
AV201P FIRST FLOOR AV REFLECTED CEILING PLAN
AV202P SECOND FLOOR AV REFLECTED CEILING PLAN

LANDSCAPE
L001 TITLE
L002 GRADING PLAN
L003 CONSTRUCTION PLAN
L004 CONSTRUCTION PLAN
L005 CONSTRUCTION DETAILS
L006 IRRIGATION PLAN
L007 IRRIGATION DETAILS
L008 IRRIGATION SPECIFICATIONS
L009 PLANTING PLAN

CIVIL
C1.1 TITLE SHEET
C1.2 NOTES
C2.1 EXISTING CONDITIONS - DEMO PLAN
C2.2 EXISTING CONDITIONS - DEMO PLAN
C3.1 GRADING PLAN
C3.2 GRADING PLAN
C3.3 GRADING DETAILS
C3.4 GRADING DETAILS CONT.
C4.1 HORIZONTAL CONTROL
C4.2 HORIZONTAL CONTROL
C5.1 UTILITY PLAN
C5.2 UTILITY PLAN
C5.3 SD PLAN AND PROFILE
C5.4 SEWER LATERAL PLAN AND PROFILE
C5.5 SEWER MAIN PLAN AND PROFILE

ADDRESS: 8353 Sierra Ave
PERMIT #: PMT06-04217-04220-04222
APN: 0192031230000
BUILD PERMIT TYPE: Building Plan
COMMENT: City Hall addition

BUILDING PERMITS ARE NOT VALID FOR "OFF-SITE" IMPROVEMENTS SEPARATE CONSTRUCTION PERMITS ARE REQUIRED FROM THE PUBLIC WORKS DEPARTMENT

THE ISSUANCE OR GRANTING OF A PERMIT BASED ON THE APPROVAL OF THESE PLANS SHALL NOT BE CONSTRUED TO PERMIT OR APPROVE ANY VIOLATION OF THE APPLICABLE CODES OR ORDINANCES. NO PERMIT PRESUMED TO GIVE AUTHORITY TO VIOLATE OR CANCEL THE PROVISIONS OF SUCH CODES SHALL BE VALID.

REVIEWED BY
APPROVED
REVIEWED BY: [signature] DATE: 4/24/06

Approved ... construed to be a permit for ... approval of any violation of any of the provisions of the state or local laws. One set of approved plans must be kept on the job until completion
WILLDAN

IT IS THE ARCHITECT'S AND OWNER'S RESPONSIBLITY TO COMPLY WITH THE "AMERICANS WITH DISABILITIES ACT". FOR INFORMATION CONTACT THE U.S. DEPARTMENT OF JUSTICE, AT (800) 514-0301.
CITY OF FONTANA

VICINITY MAP

NOT TO SCALE

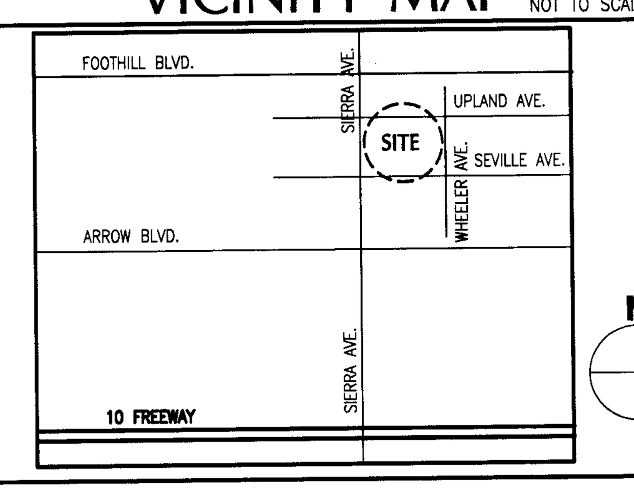

N

LANGDON WILSON
ARCHITECTURE PLANNING INTERIORS
18800 VON KARMAN AVENUE, SUITE 200
IRVINE, CALIFORNIA 92612-1517
949 - 833 - 9193

STRUCTURAL
KPFF 949 - 252 - 1022
MECHANICAL
TKSC 949 - 756 - 0565
ELECTRICAL
GLP 714 - 751 - 1851
LANDSCAPE
FRANK RADMACHER 714 - 832 - 1774
CIVIL ENGINEER
IKE CONSULTING 714 - 241 - 0606
AUDIO / VISUAL
VENEKLASEN ASSOCIATES 310 - 450 - 1733
DATA TELEPHONE
PLANNET CONSULTING 714 - 982 - 5800

Date Issued:
Description: PERMIT FOR THE TWO STORY, 27,052 SF EXTENSION OF FONTANA CITY HALL, CONSISTING OF OFFICES FOR BUILDING & PLANNING DEPARTMENTS, & WITH ENTRY CANOPY. EXTENSION @ SOUTH SIDE OF EXISTING CITY HALL & CONSTRUCTED PER CONSTRUCTION DOCUMENTS.
Address: 8353 SIERRA AVE
PMT06-04217

PC 05-11058

APPROVED
APPLICANT
JOB COPY

CITY OF FONTANA
DEVELOPMENT SERVICES
ORGANIZATION BUILDING
8353 SIERRA AVENUE FONTANA, CALIFORNIA

Date Issued:
Description: PERMIT FOR 104 LF @ 8 FT. HIGH BLOCK WALL & 32 LF. @ 8 FT. HIGH METAL FENCING FOR A OPEN PATIO @ FONTANA CITY HALL EXTENSION EAST SIDE OF BUILDING PER CONSTRUCTION DOCUMENTS.
Address: 8353 SIERRA AVE
PMT06-04220

Date Issued:
Description: PERMIT FOR 38' x 14.67' TRASH & TRANSFORMER ENCLOSURE @ EAST SIDE OF FONTANA CITY HALL PER CONSTRUCTION DOCUMENTS.
Address: 8353 SIERRA AVE
PMT06-04222

CITY OF FONTANA CALIFORNIA

REV.	DATE	ISSUED FOR	REV.	DATE	ISSUED FOR
	08-12-05	SCHEMATICS			
	10-17-05	DD PACKAGE			
	12-05-05	PLAN CHECK			
	02-06-06	PC RESUBMIT.			
	04-17-06	PERMIT SET			
	04-17-06	BID SET			

Stamp
LICENSED ARCHITECT
JON PATRICK ALLEN
NO. C7181
REN. 03-31-07
STATE OF CALIFORNIA

PERMIT SET / BID SET 04-17-06

DATE: 11/01/05 SCALE: AS SHOWN
DRAWN BY:
JOB NO. L454-000 CADD TITLE: A001
SHEET TITLE:
GENERAL NOTES AND DATA
SHEET NUMBER:
A001

©Copyright 2005 Langdon Wilson

SITE NOTES

1. NEW CONC. SIDEWALK – SEE CIVIL
2. NEW CURB/GUTTER – SEE CIVIL
3. TRAFFIC PAINT STRIPING
4. CONCRETE PAVING – SEE LANDSCAPE DRAWINGS
5. FOUNTAIN – SEE LANDSCAPE
6. CMU WALL W/ SMOOTH PLASTER FINISH
7. TILT-UP CONC. PANEL ENCLOSURE
8. PROTECT EXISTING TREES IN PLACE
9. NEW CONC. CURB TO MATCH EXISTING
10. NEW CONC. CURB

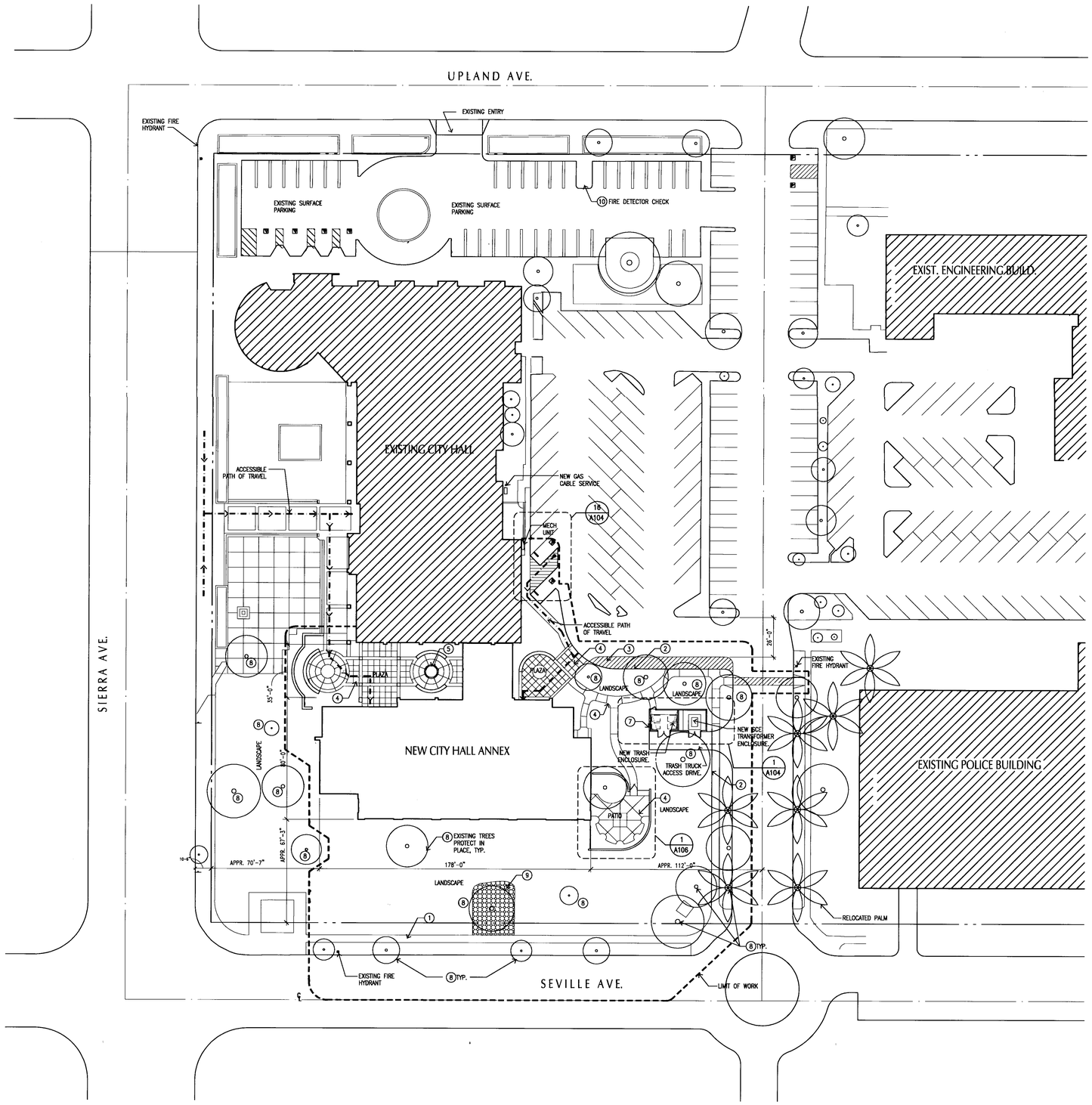

APPROVED
MAY 01 2006
BUILDING & SAFETY
CITY OF FONTANA

APPROVED
REVIEWED BY _____ DATE

Approval of these plans shall not be construed to be a permit for, or an approval of any violation of any of the provisions of the state or local laws. One set of approved plans must be kept on the job until completion.
WILLDAN

N

OVERALL SITE PLAN
1" = 30'-0"

LANGDON WILSON
ARCHITECTURE
PLANNING
INTERIORS

18800 VON KARMAN AVENUE, SUITE 200
IRVINE, CALIFORNIA 92612-1517
949 · 833 · 9193

STRUCTURAL
KPFF 949 · 252 · 1022
MECHANICAL
TKSC 949 · 756 · 0565
ELECTRICAL
GLP 714 · 751 · 1851
LANDSCAPE
FRANK RADMACHER 714 · 832 · 1774
CIVIL ENGINEER
IKE CONSULTING 714 · 241 · 0606
AUDIO / VISUAL
VENEKLASEN ASSOCIATES 310 · 450 · 1733
DATA TELEPHONE
PLANNET CONSULTING 714 · 982 · 5800

CITY OF FONTANA
DEVELOPMENT SERVICES ORGANIZATION BUILDING

8353 SIERRA AVENUE FONTANA, CALIFORNIA

CITY OF FONTANA CALIFORNIA

REV.	DATE	ISSUED FOR	REV.	DATE	ISSUED FOR
	08-12-05	SCHEMATICS			
	09-08-05	SCHEMATICS REV.			
	10-17-05	DD PACKAGE			
	12-05-05	PLAN CHECK			
	02-06-06	PC RESUBMIT.			
	04-17-06	PERMIT SET			
	04-17-06	BID SET			

Stamp

LICENSED ARCHITECT JAY PATRICK LEE NO. C7181 REN. 03-31-06 STATE OF CALIFORNIA

DATE: 11/01/05 SCALE: 1" = 30'-0"
DRAWN BY:
JOB NO. L454-000 CADD TITLE: A101

SHEET TITLE:
OVERALL SITE PLAN

SHEET NUMBER:
A101

© Copyright 2005 Langdon Wilson

PERMIT SET / BID SET 04-17-06

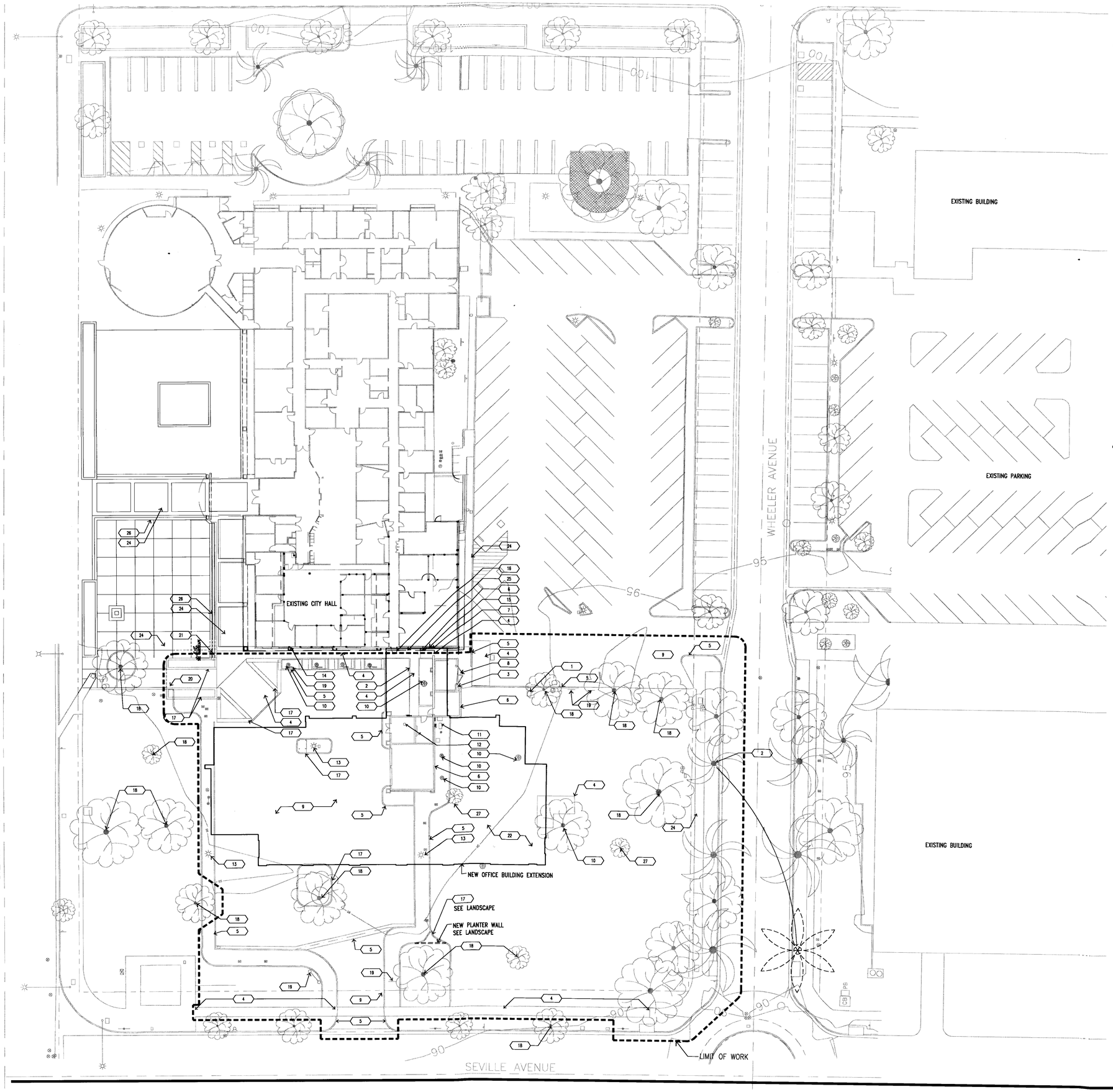

KEYNOTES

1. REMOVE EXISTING CAR CHARGING STATION.
2. RELOCATE EXISTING PALM TREE.
3. REMOVE EXISTING CONCRETE BLOCK TRASH ENCLOSURE.
4. REMOVE EXISTING CONCRETE.
5. REMOVE EXISTING CONCRETE CURB, GUTTER AND WALKWAY.
6. REMOVE EXISTNG MASONARY WALL, FRAMING & FOUNDATION.
7. REMOVE EXISTING HANDRAIL.
8. REMOVE EXISTING STEEL GATE.
9. REMOVE EXISTING ASPHALT PAVING (SEE CIVIL)
10. REMOVE EXITING TREE & ROOT SYSTEM (SEE LANDSCAPE.)
11. REMOVE EXISTING CATV SERVICE.
12. REMOVE EXISTING ELECTRIC SERVICE.
13. REMOVE EXISTING LIGHT FIXTURE & FOUNDATION.
14. EXISTING MASONARY WALL AND POST TO REMAIN.
15. REMOVE EXISTING WINDOW.
16. EXISTING DOOR TO BE REPLACED – SEE ARCH. DWGS..
17. REMOVE EXISTING PLANTER.
18. EXISTING TREE TO REMAIN – PROTECT IN PLACE
19. REMOVE EXISTING SIGN.
20. REMOVE EXISTING CONCRETE RAMP.
21. REMOVE EXISTING STEPS & PAVING (PARTIALLY, SEE LANDSCAPE.)
22. REMOVE EXISTING PLANTING AREA FOR NEW BUILDING FOUNDATION (SEE LANDSCAPE.)
23. (NOT USED)
24. EXISTING CONCRETE WALK TO REMAIN.
25. REMOVE PARTIAL ROOF PER NEW CONNECTING BUILDING SEE SHEET A201
26. EXISTING STEPS TO REMAIN.
27. EXIST. TREE TO BE RELOCATED BY CITY PERSONNEL.

SITE DEMOLITION NOTES

1. INTENT OF THE DRAWINGS IS TO SHOW EXISTING SITE AND BUILDING CONDITIONS WITH INFORMATION DEVELOPED FROM THE ORIGINAL CONSTRUCTION DOCUMENTS, FIELD SURVEYS, AND THE OWNER'S RECORDS, AND TO GENERALLY SHOW AMOUNT AND TYPES OF DEMOLITION AND REMOVALS REQUIRED TO PREPARE EXISTING AREAS FOR NEW WORK. THE CONTRACTOR SHALL MAKE A DETAILED SURVEY OF EXISTING CONDITIONS PERTAINING TO THE WORK BEFORE COMMENCING DEMOLITION. REPORT DISCREPANCIES BETWEEN DRAWINGS AND ACTUAL CONDITIONS TO THE ARCHITECT FOR INSTRUCTIONS, AND DO NOT PERFORM ANY DEMOLITION OR REMOVALS WHERE SUCH DISCREPANCIES OCCUR PRIOR TO RECEIPT OF THE ARCHITECT'S INSTRUCTIONS
2. DEMOLISH AND REMOVE EXISTING BUILDINGS AND STRUCTURES WHERE INDICATED, INCLUDING ALL FOOTINGS AND FOUNDATIONS.
3. DEMOLISH AND REMOVE EXISTING SITE IMPROVEMENTS INCLUDING WALKS, PAVING, CURBS, FENCES, WALLS, AND FOUNDATIONS.
4. MAKE ALL NECESSARY ARRANGEMENTS AND REMOVE ABANDONED ON-SITE UTILITIES TO BE RELOCATED INCLUDING CAPPING AND SEALING UNDERGROUND SERVICES AT PROPERTY LINE. UTILITY SERVICES TO BE RELOCATED AND CONNECTED PRIOR TO REMOVAL OF EXISTING SYSTEMS.
5. REMOVE TREES IN NEW CONSTRUCTION AREA AND AS INDICATED.
6. DEMOLITION AND REMOVAL OF OFF-SITE CONSTRUCTION ON PUBLIC PROPERTY AS INDICATED.
7. CLEAN UP AND DISPOSAL OF DEMOLITION AND REMOVAL DEBRIS.
8. SALVAGE AS DIRECTED BY OWNER, INCLUDING DELIVERY TO OWNER'S STORAGE.
9. GIVE ALL REQUIRED NOTICES, PAY ALL FEES AND CHARGES, AND ARRANGE FOR THE DISCONNECTION AND REMOVAL OF ABANDONED OR RELOCATED PUBLIC UTILITIES AND METERS.

APPROVED
MAY 01 2006
BUILDING & SAFETY
CITY OF FONTANA

APPROVED
REVIEWED BY: _____
DATE

Approval of these plans shall not be construed to be a permit for, or an approval of any violation of any of the provisions of the state or local laws. One set of approved plans must be kept on the job until completion.
WILLDAN

N

DEMOLITION PLAN 1
1" = 20'-0"

LANGDON WILSON
ARCHITECTURE
PLANNING
INTERIORS

18800 VON KARMAN AVENUE, SUITE 200
IRVINE, CALIFORNIA 92612-1517
949 - 833 - 9193

STRUCTURAL
KPFF 949 - 252 - 1022
MECHANICAL
TKSC 949 - 756 - 0565
ELECTRICAL
GLP 714 - 751 - 1851
LANDSCAPE
FRANK RADMACHER 714 - 832 - 1774
CIVIL ENGINEER
IKE CONSULTING 714 - 241 - 0606
AUDIO / VISUAL
VENEKLASEN ASSOCIATES 310 - 450 - 1733
DATA TELEPHONE
PLANNET CONSULTING 714 - 982 - 5800

CITY OF FONTANA
DEVELOPMENT SERVICES
ORGANIZATION BUILDING
8353 SIERRA AVENUE FONTANA, CALIFORNIA

REV.	DATE	ISSUED FOR	REV.	DATE	ISSUED FOR
	08-12-05	SCHEMATICS			
	09-08-05	SCHEMATICS REV.			
	10-17-05	DD PACKAGE			
	12-05-05	PLAN CHECK			
	02-06-06	PC RESUBMIT.			
	04-17-06	PERMIT SET			
	04-17-06	BID SET			

Stamp

LICENSED ARCHITECT
NO. C7181
EXP. 03-31-07
STATE OF CALIFORNIA

DATE: 11/01/05 SCALE: AS NOTED
DRAWN BY:
JOB NO. L454-000 CADD TITLE: A103

SHEET TITLE:
DEMOLITION PLAN

SHEET NUMBER:
A103

©Copyright 2005 Langdon Wilson

PERMIT SET / BID SET 04-17-06

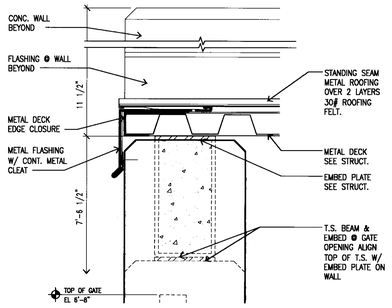

METAL DECK EDGE DETAIL 25

TRASH-11 3" =1'-0"

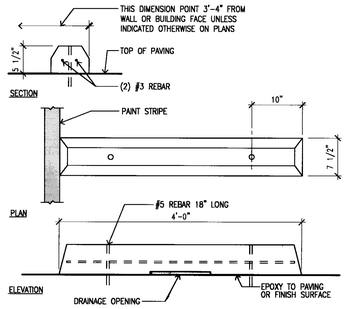

WHEEL STOP 20

DE\WHEEL-01 1"=1'-0"

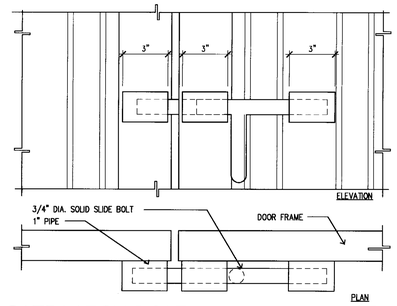

GATE LATCH BOLT 15

DETS\TRSH-04 3"=1'-0"

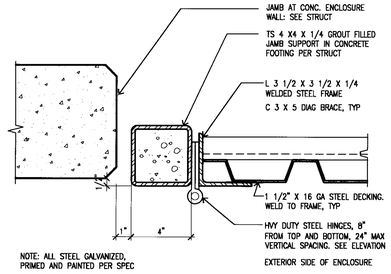

GATE JAMB 10

DETS\TRSH-02 3"=1'-0"

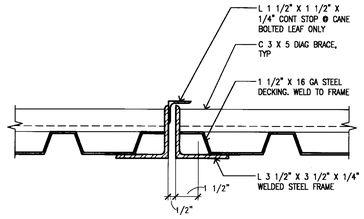

GATE 5

DETS\TRSH-03 3"=1'-0"

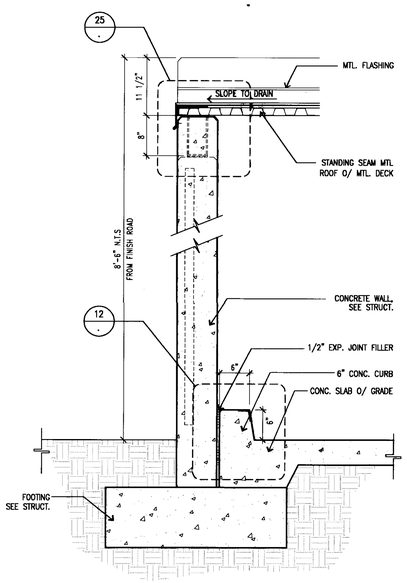

TRASH ENCLOSURE WALL DET 23

TRSH-10 1"=1'-0"

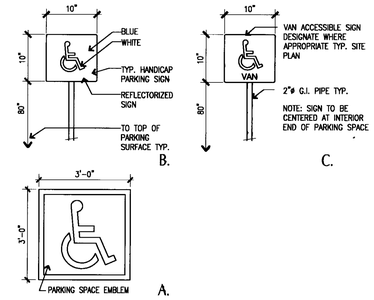

HC PARKING SIGNAGE 19

SIGN-01 NTS

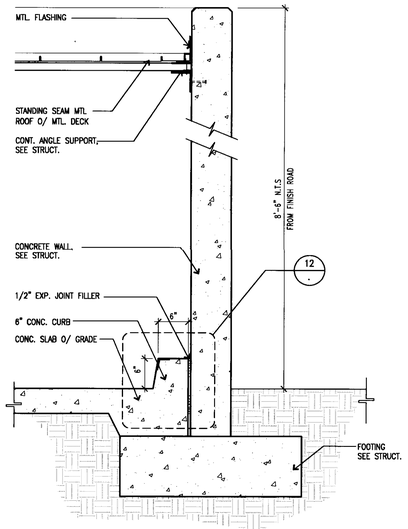

TRASH ENCLOSURE WALL DET 13

TRSH-06 1"=1'-0"

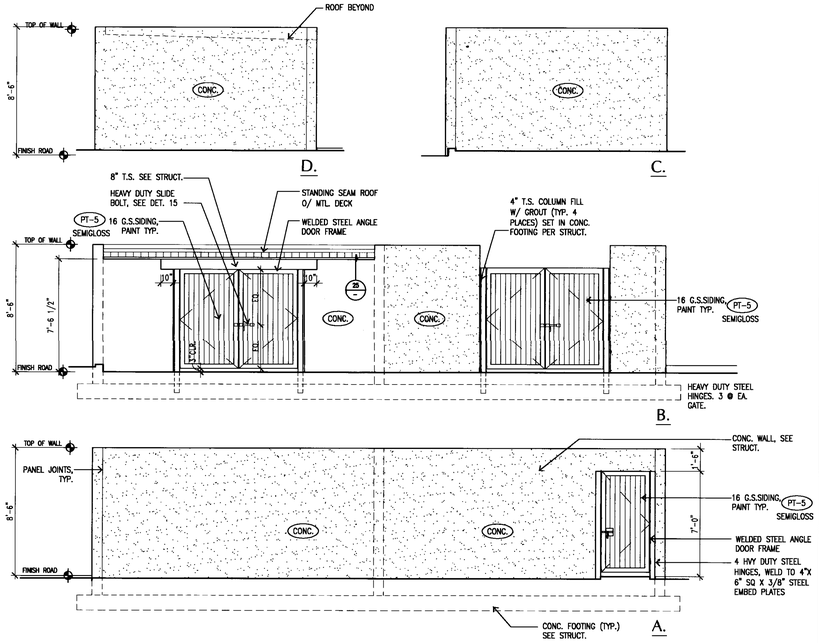

TRASH ENCLOSURE ELEVATIONS 3

TRSH-01 1/4"=1'-0"

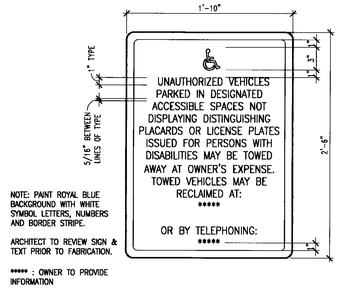

HC PARKING SIGNAGE 18

DE\SIGN-02 1 1/2" = 1'-0"

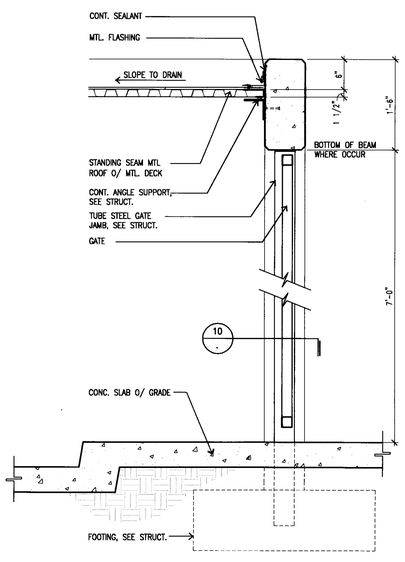

TRASH ENCLOSURE WALL DET 21

TRSH-09 1"=1'-0"

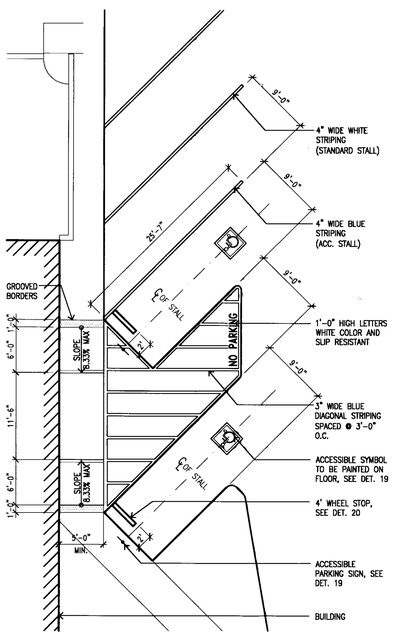

ENLARGED SITE PLAN 16

DE\PARKG-01 1/8"=1'-0"

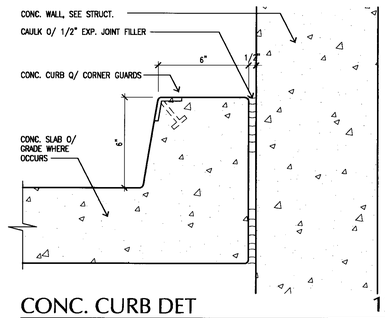

CONC. CURB DET 12

DE\TRSH-07 3" = 1'-0"

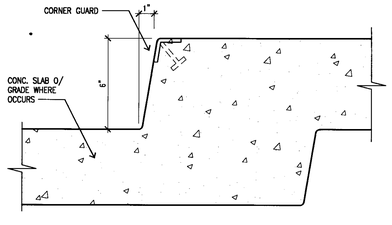

CONC. CURB DET 11

DE\TRSH-08 3" = 1'-0"

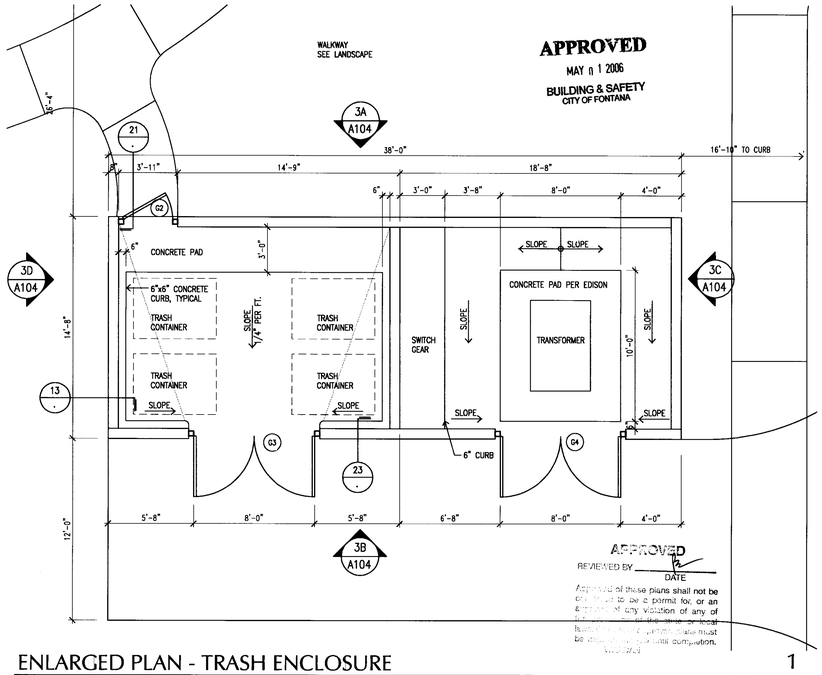

ENLARGED PLAN - TRASH ENCLOSURE 1

1/4"=1'-0"

LANGDON WILSON
ARCHITECTURE
PLANNING
INTERIORS

18800 VON KARMAN AVENUE, SUITE 200
IRVINE, CALIFORNIA 92612-1517
949 - 833 - 9193

STRUCTURAL
KPFF 949 - 252 - 1022
MECHANICAL
TKSC 949 - 756 - 0565
ELECTRICAL
GLP 714 - 751 - 1851
LANDSCAPE
FRANK RADMACHER 714 - 832 - 1774
CIVIL ENGINEER
IKE CONSULTING 714 - 241 - 0606
AUDIO / VISUAL
VENEKLASEN ASSOCIATES 310 - 450 - 1733
DATA TELEPHONE
PLANNET CONSULTING 714 - 982 - 5800

CITY OF FONTANA
DEVELOPMENT SERVICES
ORGANIZATION BUILDING
8353 SIERRA AVENUE FONTANA, CALIFORNIA

REV.	DATE	ISSUED FOR	REV.	DATE	ISSUED FOR
	12-05-05	PLAN CHECK			
	02-06-06	PC RESUBMIT.			
	04-17-06	PERMIT SET			
	04-17-06	BID SET			

Stamp

LICENSED ARCHITECT JOE PARKER ALLEN NO. C7181 REN. 03-31-07 STATE OF CALIFORNIA

DATE: SCALE: AS SHOWN
DRAWN BY:
JOB NO. L454-000 CADD TITLE A104

SHEET TITLE:
TRASH ENCLOSURE

SHEET NUMBER:
A104

©Copyright 2005 Langdon Wilson

PERMIT SET / BID SET 04-17-06

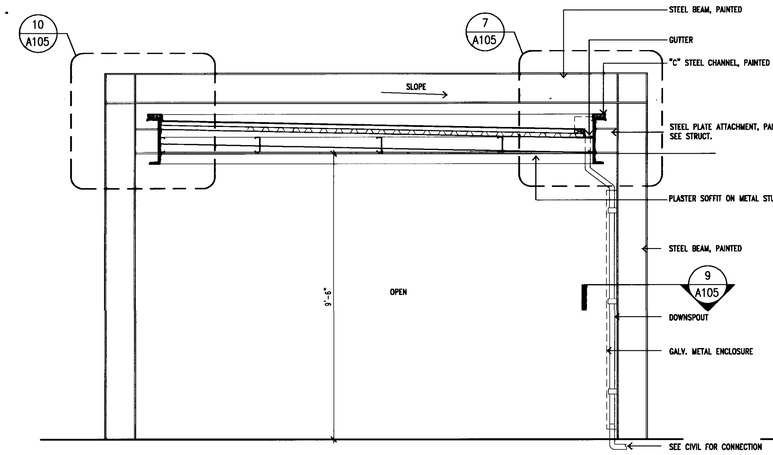

SECTION - B

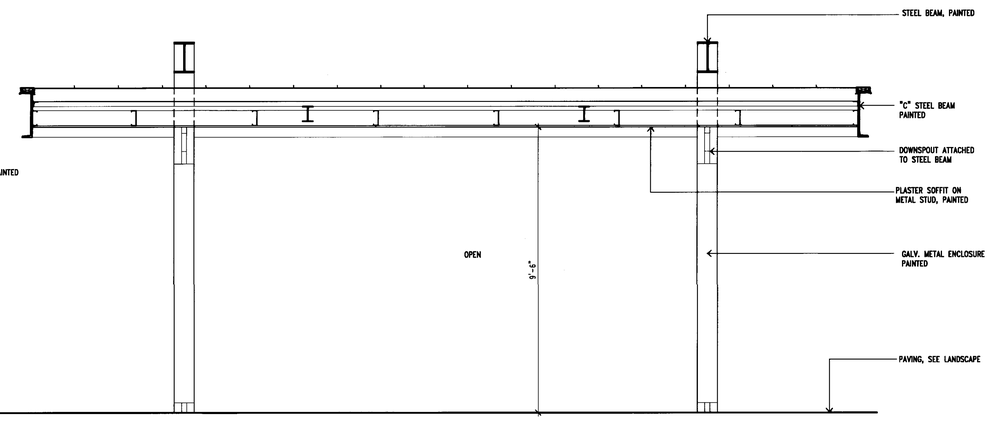

SECTION - A

ENTRY CANOPY SECTIONS

3

1/2"=1'-0"

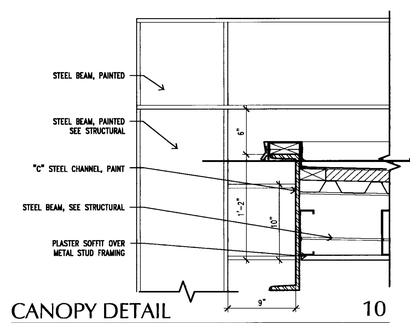

CANOPY DETAIL

10

DE\EC-04

1 1/2" = 1'-0"

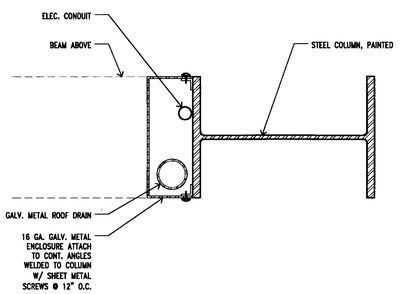

DOWN SPOUT ENCLOSURE

9

DE\EC-05

3" = 1'-0"

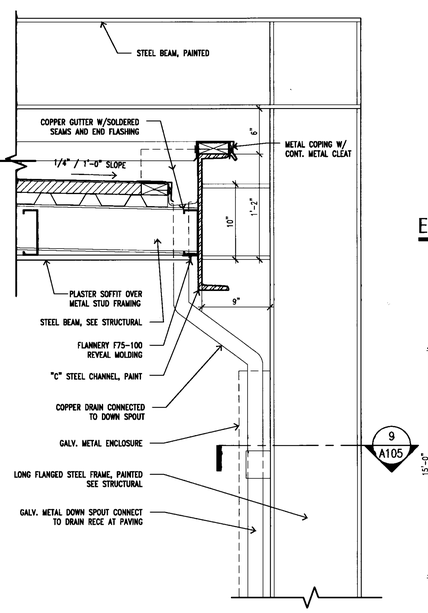

CANOPY DETAIL

7

DE\EC-03

1 1/2" = 1'-0"

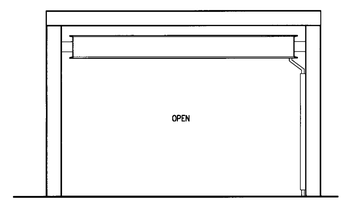

SIDE ELEVATION

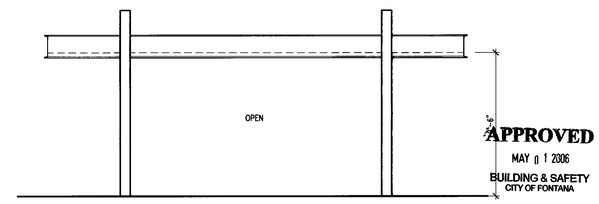

FRONT ELEVATION

APPROVED
MAY 01 2006
BUILDING & SAFETY
CITY OF FONTANA

ENTRY CANOPY ELEVATION

2

1/4"=1'-0"

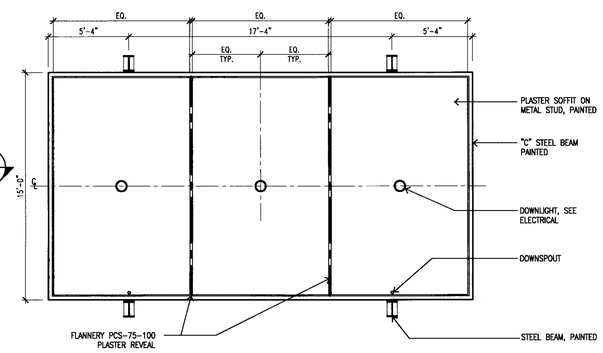

ENTRY CANOPY REFLECTED CEILING PLAN

1/4"=1'-0"

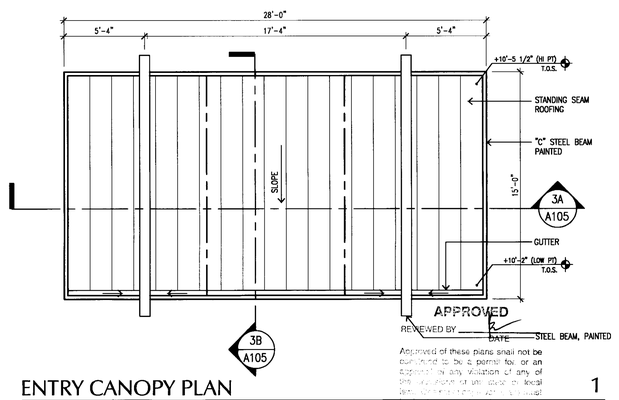

APPROVED
REVIEWED BY _____ DATE _____
Approval of these plans shall not be construed to be a permit for, or an approval of any violation of any of the provisions of the local building ordinances or any other ordinances or laws.

ENTRY CANOPY PLAN

1

1/4"=1'-0"

LANGDON
WILSON
ARCHITECTURE
PLANNING
INTERIORS

18800 VON KARMAN AVENUE, SUITE 200
IRVINE, CALIFORNIA 92612-1517
949 - 833 - 9193

STRUCTURAL
KPFF 949 - 252 - 1022
MECHANICAL
TKSC 949 - 756 - 0565
ELECTRICAL
GLP 714 - 751 - 1851
LANDSCAPE
FRANK RADMACHER 714 - 832 - 1774
CIVIL ENGINEER
IKE CONSULTING 714 - 241 - 0606
AUDIO / VISUAL
VENEKLASEN ASSOCIATES 310 - 450 - 1733
DATA TELEPHONE
PLANNET CONSULTING 714 - 982 - 5800

CITY OF FONTANA

DEVELOPMENT SERVICES
ORGANIZATION BUILDING

8353 SIERRA AVENUE FONTANA, CALIFORNIA

CITY OF FONTANA CALIFORNIA

REV.	DATE	ISSUED FOR	REV.	DATE	ISSUED FOR
	12-05-05	PLAN CHECK			
	02-06-06	PC RESUBMIT.			
	04-17-06	PERMIT SET			
	04-17-06	BID SET			

Stamp

LICENSED ARCHITECT
JOHN PATRICK ALLEN
NO. C7181
EXP. 03-31-07
STATE OF CALIFORNIA

DATE: SCALE: AS SHOWN
DRAWN BY:
JOB NO. L454-000 CADD TITLE A104

SHEET TITLE:
ENTRY CANOPY

SHEET NUMBER:
A105

©Copyright 2005 Langdon Wilson

PERMIT SET / BID SET 04-17-06

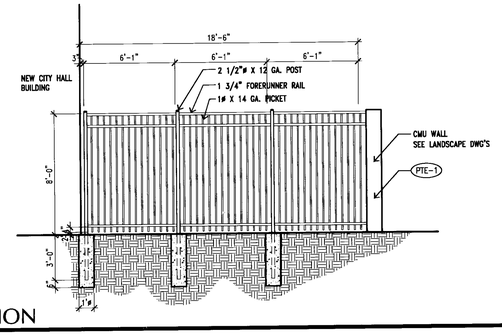

FENCING ELEVATION 3

1/4" = 1'-0"

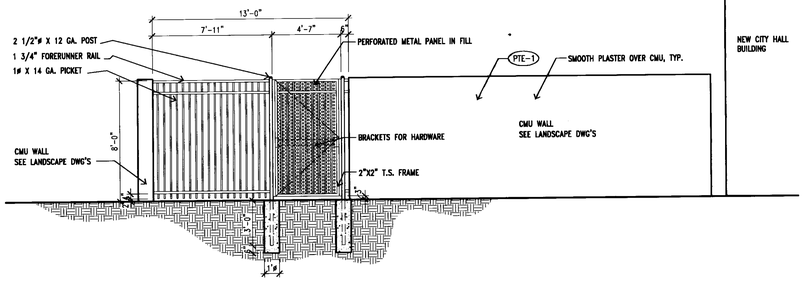

FENCING & GATE ELEVATION 2

1/4" = 1'-0"

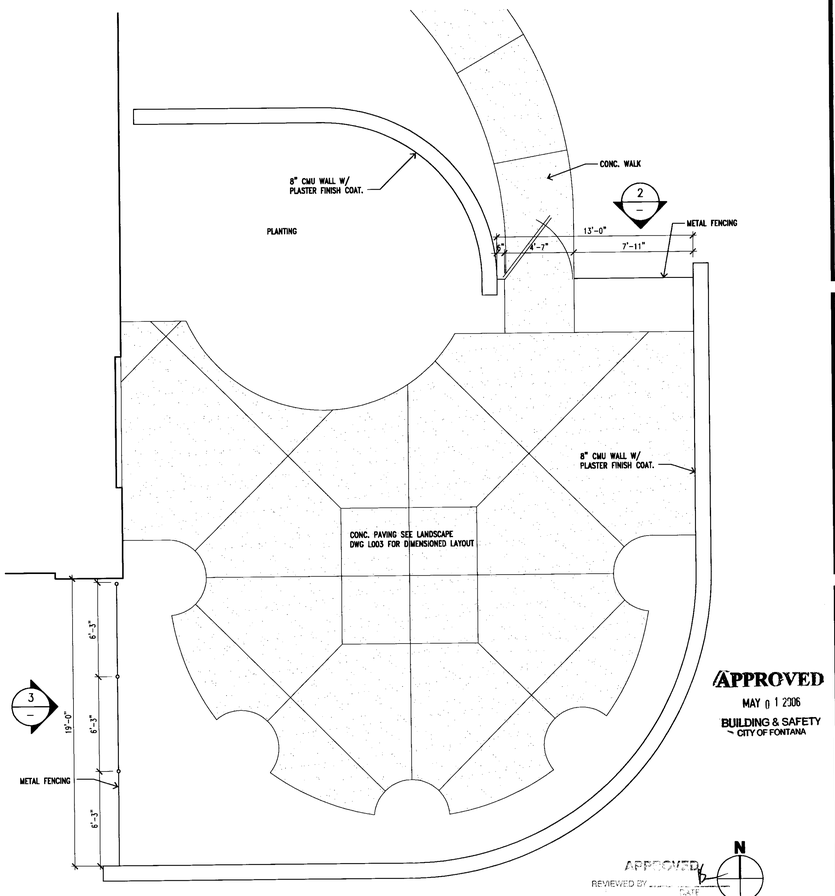

APPROVED
MAY 0 1 2006
BUILDING & SAFETY
CITY OF FONTANA

APPROVED
REVIEWED BY ____ DATE
Approved of these plans shall not be construed to be a permit for, or an approval of any violation of any of the provisions of the state or local laws. One set of approved plans must be kept on the job until completion.

ENLARGED PLAN - PATIO 1

1/4" = 1'-0"

LANGDON WILSON
ARCHITECTURE
PLANNING
INTERIORS

18800 VON KARMAN AVENUE, SUITE 200
IRVINE, CALIFORNIA 92612-1517
949 - 833 - 9193

STRUCTURAL
KPFF 949 - 252 - 1022
MECHANICAL
TKSC 949 - 756 - 0565
ELECTRICAL
GLP 714 - 751 - 1851
LANDSCAPE
FRANK RADMACHER 714 - 832 - 1774
CIVIL ENGINEER
IKE CONSULTING 714 - 241 - 0606
AUDIO / VISUAL
VENEKLASEN ASSOCIATES 310 - 450 - 1733
DATA TELEPHONE
PLANNET CONSULTING 714 - 982 - 5800

CITY OF FONTANA
DEVELOPMENT SERVICES
ORGANIZATION BUILDING
8353 SIERRA AVENUE FONTANA, CALIFORNIA

REV.	DATE	ISSUED FOR	REV.	DATE	ISSUED FOR
	04-17-06	PERMIT SET			
	04-17-06	BID SET			

Stamp

LICENSED ARCHITECT
JON PATRICK ALLEN
NO. C7181
REN. 03-31-07
STATE OF CALIFORNIA

DATE: 11/01/05 SCALE: 1/4" = 1'-0"
DRAWN BY:
JOB NO. L454-000 CADD TITLE: A106

SHEET TITLE:
PATIO PLAN

SHEET NUMBER:
A106

©Copyright 2005 Langdon Wilson

PERMIT SET / BID SET 04-17-06

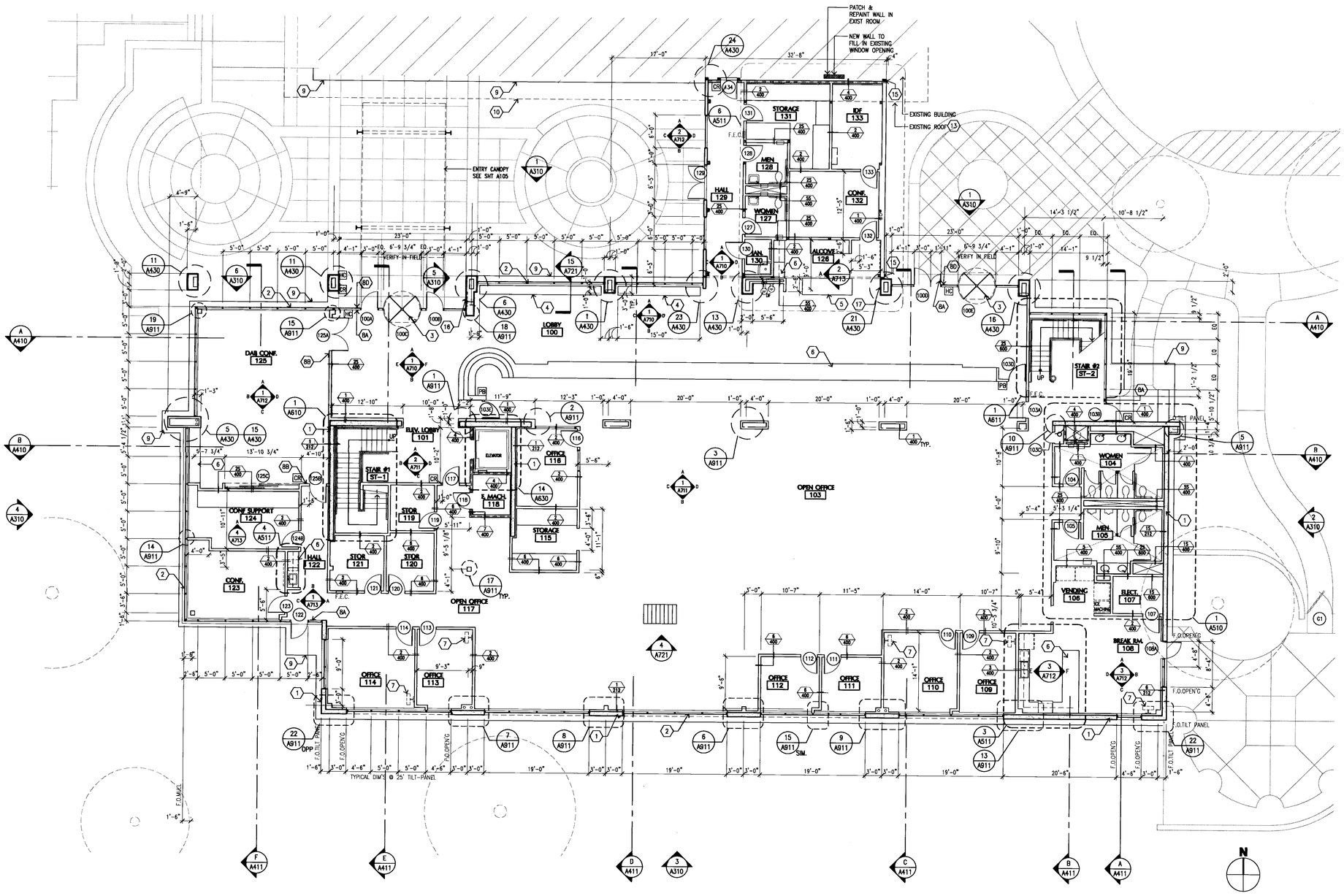

FIRST FLOOR PLAN 1

1/8"=1'-0"

A201

FLOOR PLAN NOTES

PLAN REFERENCES

1. FOR WALL TYPES, SEE SHT A830
2. FOR DOOR SCHEDULE, SEE SHT A820
3. FOR FINISH SCHEDULE, SEE SHT A810
4. FOR ACCESSORY PLAN/LEGEND, SEE SHT. A510 & A511
5. FOR ACCESSORY MOUNTING HEIGHTS & SIGNAGE, SEE SHT. A920

F.E. – WALL MOUNTED FIRE EXTINGUISHER, SEE SPEC'S.

F.E.C. – FIRE EXTINGUISHER IN CABINET SEE SPEC'S.

WALL LEGEND

- MTL. STUD WALL
- 1-HOUR RATED WALL
- 2-HOUR RATED WALL
- CMU WALL
- CONCRETE WALL

FLOOR PLAN KEYNOTES

1. TILT-UP CONCRETE PANEL
2. WINDOW WALL
3. REVOLVING DOOR
4. BUILT IN BENCH, SEE DETAIL 15/A721
5. REFERENCE COUNTER, SEE DETAIL 13/A721
6. MILLWORK, SEE INTERIOR ELEVATIONS ON SHEETS A710 – A721
7. PROVIDE BACKING FOR WALL MOUNTED TV, SEE DETAIL 14/A830
8. WALL MOUNTED SIGNAGE
   - A. SEE DETAIL 9A/A920
   - B. SEE DETAIL 9B/A920
   - C. SEE DETAIL 9C/A920
   - D. SEE DETAIL 11/A920
9. CONCRETE MOWSTRIP / PAD
10. EDGE OF EXISTING ROOF
11. PROVIDE BACKING FOR AV EQUIPMENT
12. SUN CONTROL SHADE
13. CUT BACK EXIST. ROFF OVERHANG AND PATCH/REPAIR/PAINT TO MATCH EXISTING PLASTER/FLASHING/GUTTER
14. FURR OUT EXISTING COLUMN TO NEW SIZE TO SUPPORT MODIFIED EXISTING ROOF EAVE.
15. EXPANSION JOINT
16. BULLETIN BOARD – RECESSED IN PLASTER WALL
17. RECESSED HANDOUTS SHELF

HC DISABLED ACTIVATOR BUTTON
CR CARD READER
PB PUSH BUTTON

LANGDON WILSON
ARCHITECTURE
PLANNING
INTERIORS

18800 VON KARMAN AVENUE, SUITE 200
IRVINE, CALIFORNIA 92612-1517
949 - 833 - 9793

STRUCTURAL
KPFF 949 - 252 - 1022
MECHANICAL
TISC 949 - 756 - 0565
ELECTRICAL
GLP 714 - 751 - 1851
LANDSCAPE
FRANK RADMACHER 714 - 832 - 1774
CIVIL ENGINEER
IKE CONSULTING 714 - 241 - 0606
AUDIO / VISUAL
VENEKLASEN ASSOCIATES 310 - 450 - 1733
DATA TELEPHONE
PLANNET CONSULTING 714 - 982 - 5800

CITY OF FONTANA
DEVELOPMENT SERVICES ORGANIZATION BUILDING

8353 SIERRA AVENUE FONTANA, CALIFORNIA

REV.	DATE	ISSUED FOR	REV.	DATE	ISSUED FOR
	08-12-05	SCHEMATICS			
	10-17-05	DD PACKAGE			
	12-05-05	PLAN CHECK			
	02-06-06	PC RESUBMIT.			
	03-13-06	PC#2 RESUBMIT.			
	04-17-06	PERMIT SET			
	04-17-06	BID SET			

Stamp

LICENSED ARCHITECT JON PATRICK ALLEN NO. C7181 REN. 03-31-07 STATE OF CALIFORNIA

APPROVED
MAY 01 2006
BUILDING & SAFETY
CITY OF FONTANA

APPROVED
REVIEWED BY _____ DATE

Approval of these plans shall not be construed to be a permit for, or an approval of any violation of any of the provisions of the state or local laws. Permits shall be issued on the basis of these plans and specifications only when they comply with all applicable laws and ordinances.

DATE: 11/01/05 SCALE: 1/8"=1'-0"
DRAWN BY: SCT
JOB NO. L454-000 CADD TITLE: A201

SHEET TITLE:
FIRST FLOOR PLAN

SHEET NUMBER:
A201

© Copyright 2005 Langdon Wilson

PERMIT SET / BID SET 04-17-06

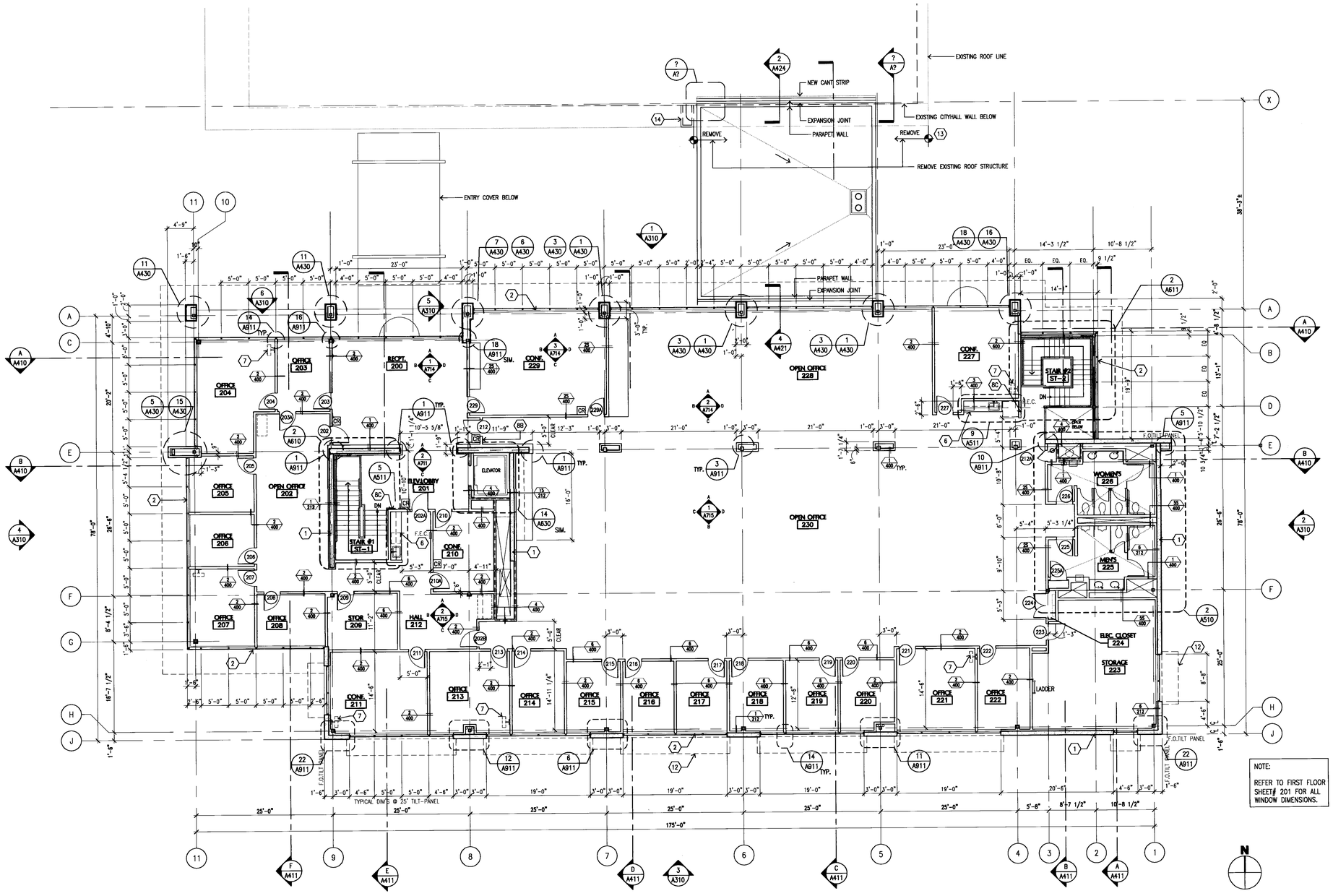

NOTE:

REFER TO FIRST FLOOR SHEET# 201 FOR ALL WINDOW DIMENSIONS.

SECOND FLOOR PLAN 1

1/8"=1'-0"

A202

FLOOR PLAN NOTES

PLAN REFERENCES

1. FOR WALL TYPES, SEE SHT A830
2. FOR DOOR SCHEDULE, SEE SHT A820
3. FOR FINISH SCHEDULE, SEE SHT A810
4. FOR ACCESSORY PLAN/LEGEND, SEE SHT. A510 & A511
5. FOR ACCESSORY MOUNTING HEIGHTS & SIGNAGE, SEE SHT. A920

F.E. – WALL MOUNTED FIRE EXTINGUISHER, SEE SPEC'S.

F.E.C. – FIRE EXTINGUISHER IN CABINET SEE SPEC'S.

WALL LEGEND

- MTL. STUD WALL
- 1-HOUR RATED WALL
- 2-HOUR RATED WALL
- CMU WALL
- CONCRETE WALL

FLOOR PLAN KEYNOTES

1. TILT-UP CONCRETE PANEL
2. WINDOW WALL
3. REVOLVING DOOR
4. BUILT IN BENCH, SEE DETAIL 15/A721
5. REFERENCE COUNTER, SEE DETAIL 13/A721
6. MILLWORK, SEE INTERIOR ELEVATIONS ON SHEETS A710 – A721
7. PROVIDE BACKING FOR WALL MOUNTED TV, SEE DETAIL 14/A830
8. WALL MOUNTED SIGNAGE
   - A. SEE DETAIL 9A/A920
   - B. SEE DETAIL 9B/A920
   - C. SEE DETAIL 9C/A920
   - D. SEE DETAIL 11/A920
9. CONCRETE MOWSTRIP / PAD
10. EDGE OF EXISTING ROOF
11. PROVIDE BACKING FOR AV EQUIPMENT
12. SUN CONTROL SHADE
13. CUT BACK EXIST. ROFF OVERHANG AND PATCH/REPAIR/PAINT TO MATCH EXISTING PLASTER/FLASHING/GUTTER
14. FURR OUT EXISTING COLUMN TO NEW SIZE TO SUPPORT MODIFIED EXISTING ROOF EAVE.
15. EXPANSION JOINT
16. BULLETIN BOARD – RECESSED IN PLASTER WALL
17. RECESSED HANDOUTS SHELF

HC DISABLED ACTIVATOR BUTTON
CR CARD READER
PB PUSH BUTTON

LANGDON WILSON
ARCHITECTURE
PLANNING
INTERIORS

18800 VON KARMAN AVENUE, SUITE 200
IRVINE, CALIFORNIA 92612-1517
949 - 833 - 9193

STRUCTURAL
KPFF 949 - 252 - 1022
MECHANICAL
TKSC 949 - 756 - 0565
ELECTRICAL
GLP 714 - 751 - 1851
LANDSCAPE
FRANK RADMACHER 714 - 832 - 1774
CIVIL ENGINEER
IKE CONSULTING 714 - 241 - 0606
AUDIO / VISUAL
VENEKLASEN ASSOCIATES 310 - 450 - 1733
DATA TELEPHONE
PLANNET CONSULTING 714 - 982 - 5800

CITY OF FONTANA

DEVELOPMENT SERVICES
ORGANIZATION BUILDING

8353 SIERRA AVENUE FONTANA, CALIFORNIA

CITY OF FONTANA CALIFORNIA

REV.	DATE	ISSUED FOR	REV.	DATE	ISSUED FOR
	08-12-05	SCHEMATICS			
	10-17-05	DD PACKAGE			
	12-05-05	PLAN CHECK			
	02-06-06	PC RESUBMIT.			
	03-13-06	PC#2 RESUBMIT.			
	04-17-06	PERMIT SET			
	04-17-06	BID SET			

Stamp

LICENSED ARCHITECT
JON PATRICK ALBERT
NO. C7181
EXP. 03-31-07
STATE OF CALIFORNIA

APPROVED
MAY 11 2006
BUILDING & SAFETY
CITY OF FONTANA

APPROVED
REVIEWED BY DATE

Approval of these plans shall not be construed to be a permit for, or an approval of any violation of any of the provisions of the state or local laws or ordinances; these plans must be kept on site until completion.
VALIDAN

DATE: 11/01/05 SCALE: 1/8"=1'-0"
DRAWN BY: SCT
JOB NO. L454-000 CADD TITLE: A202

SHEET TITLE:
SECOND FLOOR PLAN

SHEET NUMBER:
A202

©Copyright 2005 Langdon Wilson

PERMIT SET / BID SET 04-17-06

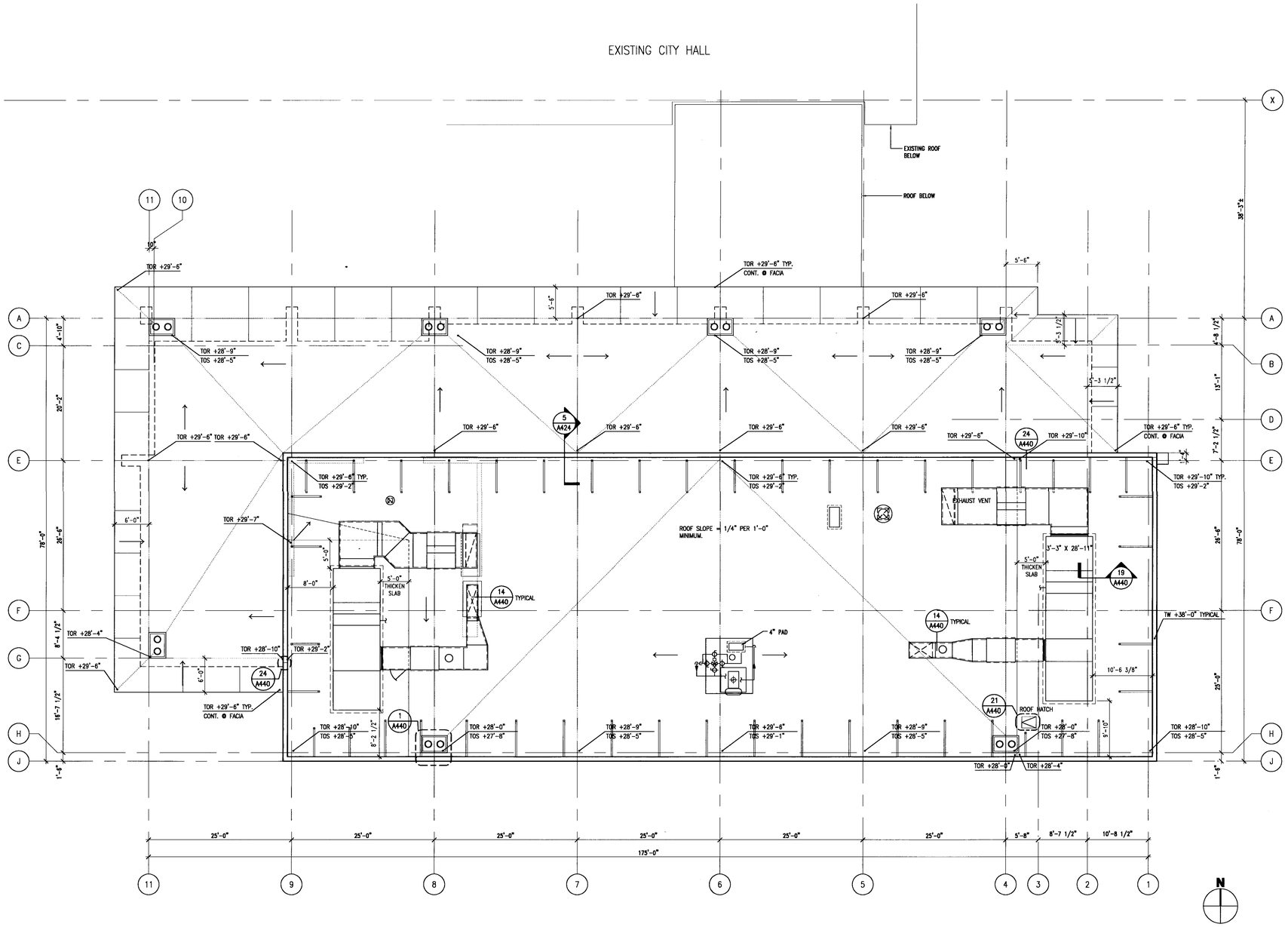

OVERALL ROOF PLAN 1

1/8" = 1'-0"

LANGDON WILSON
ARCHITECTURE
PLANNING
INTERIORS

18800 VON KARMAN AVENUE, SUITE 200
IRVINE, CALIFORNIA 92612-1517
949 - 833 - 9193

STRUCTURAL
KPFF 949 - 252 - 1022
MECHANICAL
TKSC 949 - 756 - 0565
ELECTRICAL
CLP 714 - 751 - 1851
LANDSCAPE
FRANK RADMACHER 714 - 832 - 1774
CIVIL ENGINEER
IKE CONSULTING 714 - 241 - 0606
AUDIO / VISUAL
VENEKLASEN ASSOCIATES 310 - 450 - 1733
DATA TELEPHONE
PLANNET CONSULTING 714 - 982 - 5800

CITY OF FONTANA

DEVELOPMENT SERVICES
ORGANIZATION BUILDING

8353 SIERRA AVENUE FONTANA, CALIFORNIA

REV.	DATE	ISSUED FOR	REV.	DATE	ISSUED FOR
	08-12-05	SCHEMATICS			
	10-17-05	DD PACKAGE			
	12-05-05	PLAN CHECK			
	02-06-06	PC RESUBMIT.			
	04-17-06	PERMIT SET			
	04-17-06	BID SET			

Stamp

LICENSED ARCHITECT
JON PATRICK ALLEN
NO. C7181
REN. 03-31-2006
STATE OF CALIFORNIA

APPROVED
MAY 01 2006
BUILDING & SAFETY
CITY OF FONTANA

APPROVED
REVIEWED BY _____ DATE

Approval of these plans shall not be construed as the waiving, or an authorization to violate any provision of any of the laws or ordinances of the City of Fontana. Approval of these plans does not preclude the requirement that they be resubmitted for plan check compliance, if required.

DATE: 11/01/05 SCALE: 1/8"=1'-0"
DRAWN BY: SCT
JOB NO. L454-000 CADD TITLE: A203

SHEET TITLE:
ROOF PLAN

SHEET NUMBER:
A203

©Copyright 2005 Langdon Wilson

PERMIT SET / BID SET 04-17-06

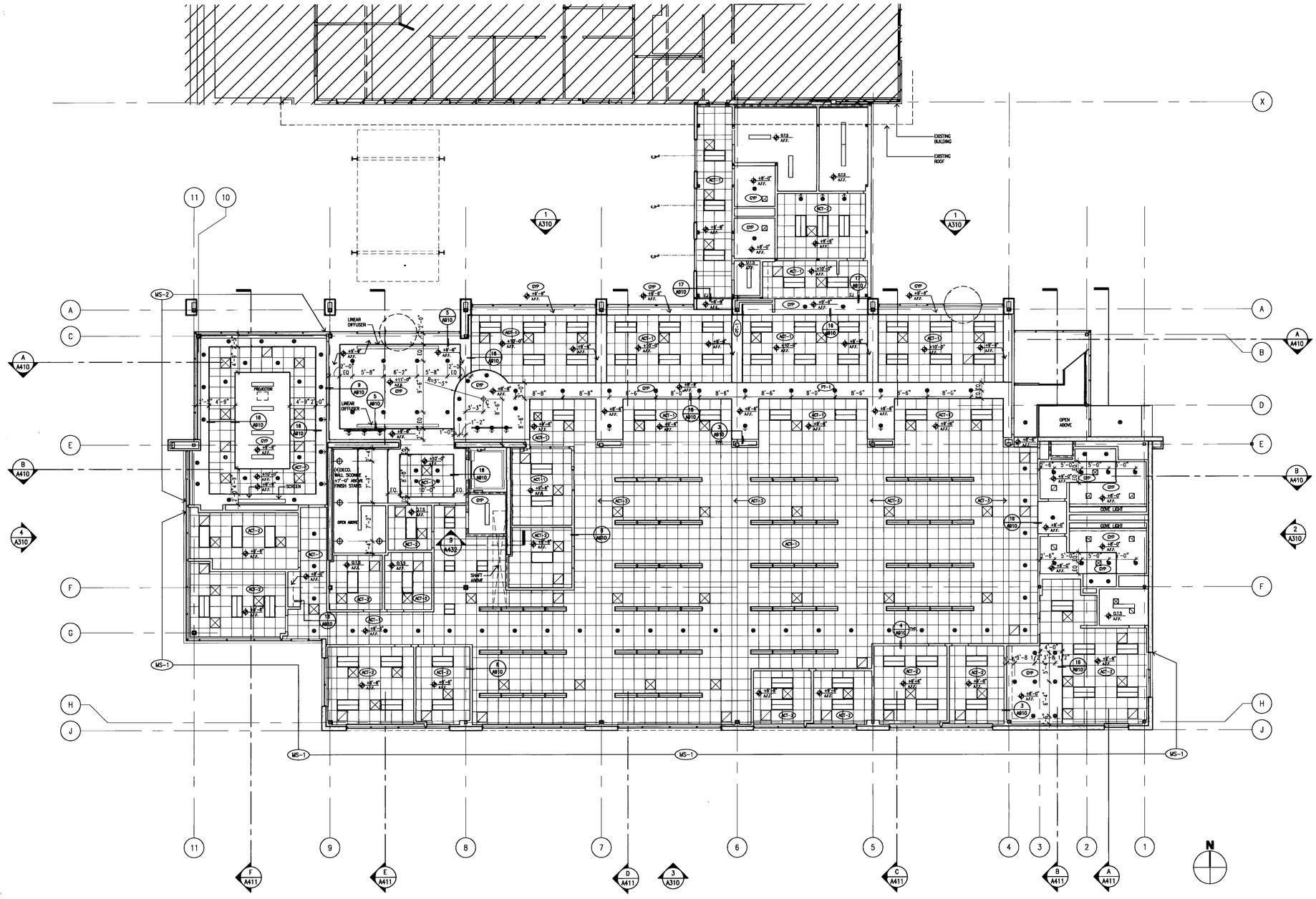

GROUND FLOOR REFLECTED CEILING PLAN 1

1/8"=1'-0"

CEILING PLAN LEGEND

DE\LEGEND-RCP

SYMBOLS

- INDIRECT FLUORESCENT FIXTURE 2'x4'
- PRISMATIC LENS FLUORESCENT FIXTURE 2'x4'
- INDIRECT FLUORESCENT FIXTURE 2'x2'
- INDIRECT FLUORESCENT FIXTURE 1'x4'
- CEILING FLUORESCENT FIXTURE 1'x4'
- RECESSED DOWNLIGHT
- DECO. LIGHT FIXTURE SEE FF & E
- FLOURESCENT OPEN STRIP 2 LAMP ROWS W/ WIRE GUARD
- EXIT SIGN
- EMERGENCY LIGHTING; SEE ELECT. DWGS.
- WALL SCONCE
- TRACK LIGHTING
- SUPPLY
- RETURN
- EXHAUST

CEILING LEGEND

ACT-1	ACOUSTIC CEILING TILE – 1 FIBERGLASS TILE
ACT-2	ACOUSTIC CEILING TILE – 2 MINERAL FIBER TILE
ACT-3	ACOUSTIC TILE-3 FIBERGLASS TILE
GYP	GYPSUM BOARD; PAINT FINISH U.O.N.
OTS	OPEN TO STRUCTURE ABOVE
PL	PLASTER
MS-1	MECHOSHADE: SINGLE SHADE, SEE SPEC
MS-2	MECHOSHADE: DOUBLE SHADE, SEE SPEC
MS-3	MECHOSHADE: BLACK-OUT SHADE ONLY, SEE SPEC

* NOTE: PROVIDE POCKETS FOR MECHOSHADES PER DETAIL

LANGDON WILSON
ARCHITECTURE
PLANNING
INTERIORS

18800 VON KARMAN AVENUE, SUITE 200
IRVINE, CALIFORNIA 92612-1517
949 · 833 · 9193

STRUCTURAL
KPFF 949 · 252 · 1022
MECHANICAL
TKSC 949 · 756 · 0565
ELECTRICAL
CLP 714 · 751 · 1851
LANDSCAPE
FRANK RADMACHER 714 · 832 · 1774
CIVIL ENGINEER
IKE CONSULTING 714 · 241 · 0606
AUDIO / VISUAL
VENEKLASEN ASSOCIATES 310 · 450 · 1733
DATA TELEPHONE
PLANNET CONSULTING 714 · 982 · 5800

CITY OF FONTANA
DEVELOPMENT SERVICES ORGANIZATION BUILDING

8353 SIERRA AVENUE FONTANA, CALIFORNIA

CITY OF FONTANA CALIFORNIA

REV.	DATE	ISSUED FOR	REV.	DATE	ISSUED FOR
	08-12-05	SCHEMATICS			
	10-17-05	DD PACKAGE			
	12-05-05	PLAN CHECK			
	02-06-06	PC RESUBMIT.			
	04-17-06	PERMIT SET			
	04-17-06	BID SET			

Stamp

LICENSED ARCHITECT JOB PATRICK KELLY NO. C7181 EXPIRES 03-31-07 STATE OF CALIFORNIA

APPROVED
MAY 01 2006
BUILDING & SAFETY
CITY OF FONTANA

APPROVED
REVIEWED BY _____ DATE

Approval of these plans shall not be construed to be a permit to, or an approval of any violation of any of the provisions of the City's ordinances or any other law. Changes may be required in the field during construction.
WILL TAN

DATE: 11/01/05 SCALE: 1/8"=1'-0"
DRAWN BY: SCT
JOB NO. L454-000 CADD TITLE: A221

SHEET TITLE:
FIRST FLOOR
REFECTED CEILING PLAN

SHEET NUMBER:
A221

©Copyright 2005 Langdon Wilson

PERMIT SET / BID SET 04-17-06

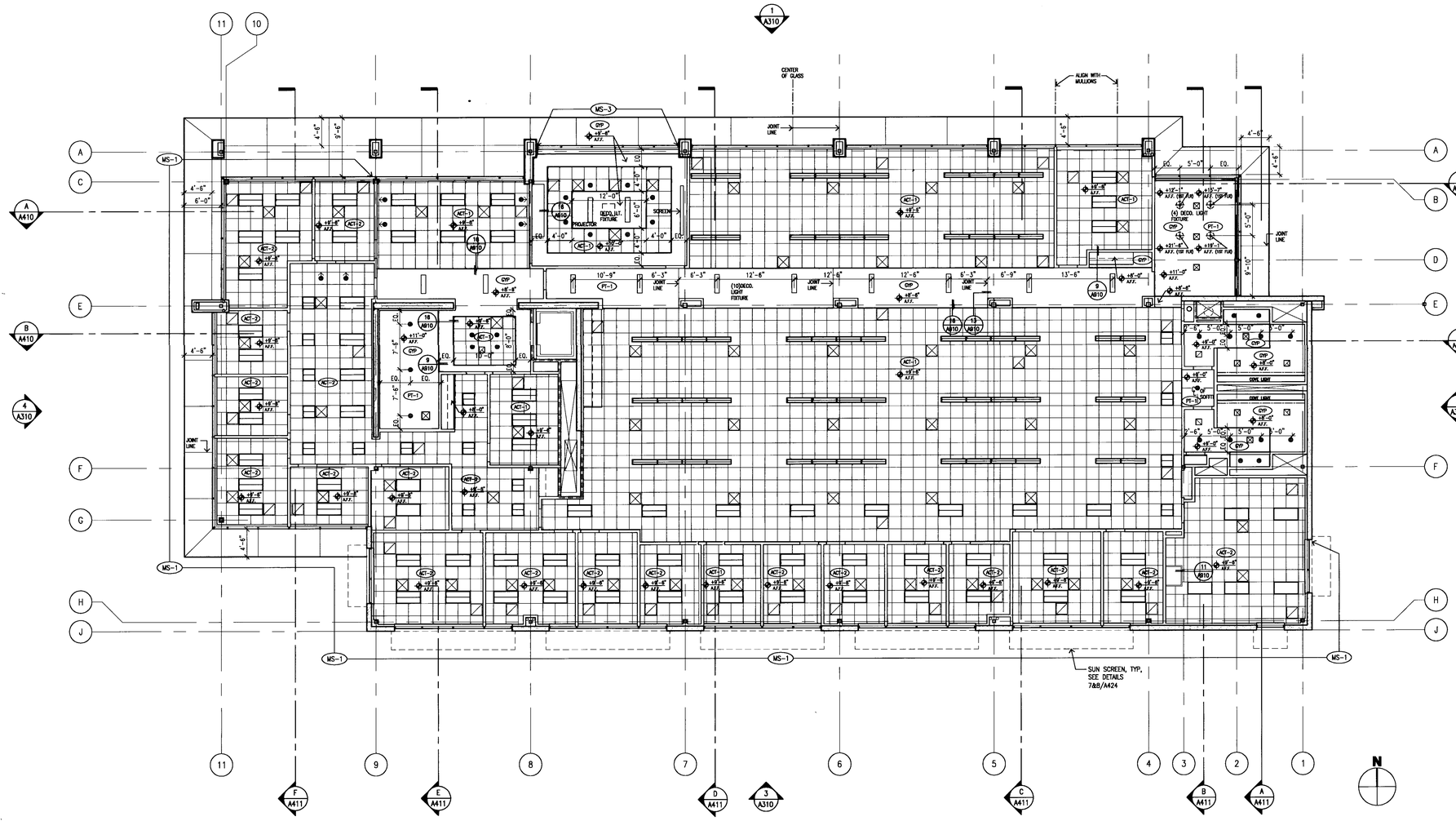

SECOND FLOOR REFLECTED CEILING PLAN 1

1/8"=1'-0"

CEILING PLAN LEGEND

DE\LEGEND-RCP

SYMBOLS

- INDIRECT FLUORESCENT FIXTURE 2'x4'
- PRISMATIC LENS FLUORESCENT FIXTURE 2'x4'
- INDIRECT FLUORESCENT FIXTURE 2'x2'
- INDIRECT FLUORESCENT FIXTURE 1'x4'
- CEILING FLUORESCENT FIXTURE 1'x4'
- RECESSED DOWNLIGHT
- DECO. LIGHT FIXTURE SEE FF & E
- FLOURESCENT OPEN STRIP 2 LAMP ROWS W/ WIRE GUARD
- EXIT SIGN
- EMERGENCY LIGHTING; SEE ELECT. DWGS.
- WALL SCONCE
- TRACK LIGHTING
- SUPPLY
- RETURN
- EXHAUST

CEILING LEGEND

ACT-1	ACOUSTIC CEILING TILE – 1 FIBERGLASS TILE
ACT-2	ACOUSTIC CEILING TILE – 2 MINERAL FIBER TILE
ACT-3	ACOUSTIC TILE-3 FIBERGLASS TILE
GYP	GYPSUM BOARD; PAINT FINISH U.O.N.
OTS	OPEN TO STRUCTURE ABOVE
PL	PLASTER
MS-1	MECHOSHADE: SINGLE SHADE, SEE SPEC
MS-2	MECHOSHADE: DOUBLE SHADE, SEE SPEC
MS-3	MECHOSHADE: BLACK-OUT SHADE ONLY, SEE SPEC

* NOTE: PROVIDE POCKETS FOR MECHOSHADES PER DETAIL

NOTE:

1. EXTERIAL ROOF PROJECTION REVEALS ALIGN W/ MULLIONS OR ARE CENTERED BETWEEN MULLIONS– SEE R.C.P. FOR ALIGNMENTS

LANGDON WILSON
ARCHITECTURE
PLANNING
INTERIORS

18800 VON KARMAN AVENUE, SUITE 200
IRVINE, CALIFORNIA 92612-1517
949 · 833 · 9193

STRUCTURAL
KPFF 949 · 252 · 1022
MECHANICAL
TKSC 949 · 756 · 0565
ELECTRICAL
GLP 714 · 751 · 1851
LANDSCAPE
FRANK RADMACHER 714 · 832 · 1774
CIVIL ENGINEER
IKE CONSULTING 714 · 241 · 0606
AUDIO / VISUAL
VENEKLASEN ASSOCIATES 310 · 450 · 1733
DATA TELEPHONE
PLANNET CONSULTING 714 · 982 · 5800

CITY OF FONTANA
DEVELOPMENT SERVICES ORGANIZATION BUILDING

8353 SIERRA AVENUE FONTANA, CALIFORNIA

REV.	DATE	ISSUED FOR	REV.	DATE	ISSUED FOR
	08-12-05	SCHEMATICS			
	10-17-05	DD PACKAGE			
	12-05-05	PLAN CHECK			
	02-06-06	PC RESUBMIT.			
	04-17-06	PERMIT SET			
	04-17-06	BID SET			

Stamp

LICENSED ARCHITECT JON PATRICK ALLEN NO. C7181 EXP. 03-31-07 STATE OF CALIFORNIA

APPROVED
MAY 01 2006
BUILDING & SAFETY
CITY OF FONTANA

APPROVED
REVIEWED BY: DATE

Approval of these plans shall not be construed to be a permit for, or an approval of any violation of any of the provisions of the uniform codes or local laws. One set of approved plans must be kept on the job until completion.
WILLDAN

DATE: 11/01/05 SCALE: 1/8"=1'-0"
DRAWN BY: SCT
JOB NO. L454-000 CADD TITLE: A222

SHEET TITLE:
SECOND FLOOR
REFECTED CEILING PLAN

SHEET NUMBER:
A222

©Copyright 2005 Langdon Wilson

PERMIT SET / BID SET 04-17-06

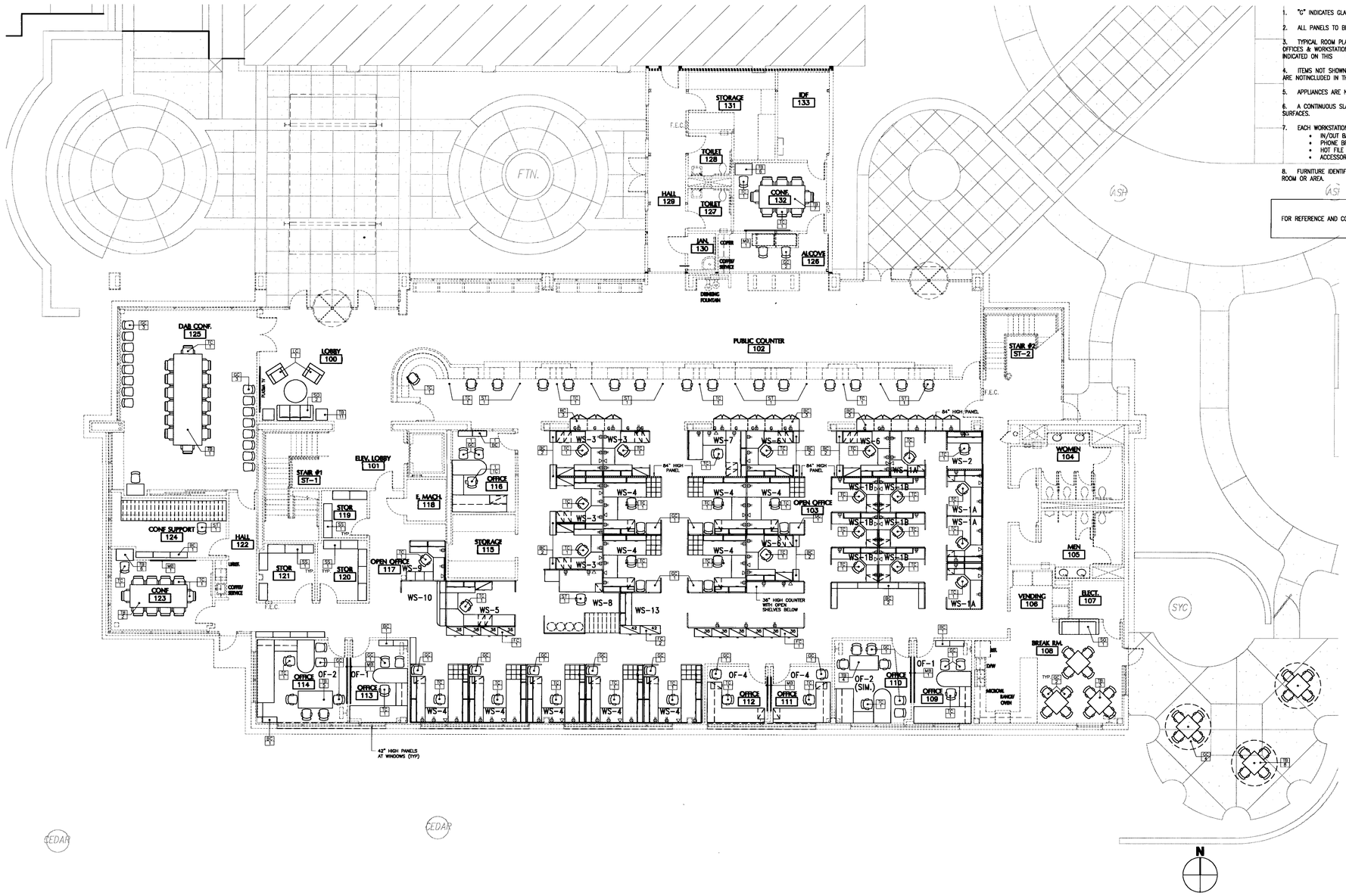

GROUND FLOOR FURNITURE PLAN 1

1/8"=1'-0"

FF&E NOTES

XR\X_FF@E NOTES

1. "G" INDICATES GLAZED TILE ABOVE 42" (±).
2. ALL PANELS TO BE 68" HIGH (±) UNLESS NOTED OR INDICATED.
3. TYPICAL ROOM PLATES INDICATE THE COMPONENTS TO BE INCLUDED IN OFFICES & WORKSTATIONS. PANEL CONFIGURATION AND SPECIFIC LAYOUT ARE AS INDICATED ON THIS PLAN.
4. ITEMS NOT SHOWN ON THE TYPICAL DETAILS OR IDENTIFIED ON THIS PLAN ARE NOTINCLUDED IN THE FF&E BID.
5. APPLIANCES ARE NOT INCLUDED IN THE FF&EBID.
6. A CONTINUOUS SLAT WALL BAND IS TO BE INCLUDED ABOVE ALL WORK SURFACES.
7. EACH WORKSTATION SHALL INCLUDE THE FOLLOWING SLAT WALL ACCESSORIES
   - IN/OUT BASKET
   - PHONE BRACKET
   - HOT FILE
   - ACCESSORY SHELF
8. FURNITURE IDENTIFICATION TAGS ARE TYPICAL. FOR ALL SIMILAR ITEMS IN A ROOM OR AREA.

FOR REFERENCE AND COORDINATION WITH OTHER TRADES

LANGDON WILSON
ARCHITECTURE
PLANNING
INTERIORS

18800 VON KARMAN AVENUE, SUITE 200
IRVINE, CALIFORNIA 92612-1537
949 · 833 · 9193

STRUCTURAL
KPFF 949 · 252 · 1022
MECHANICAL
TKSC 949 · 756 · 0565
ELECTRICAL
GLP 714 · 791 · 1851
LANDSCAPE
FRANK RADMACHER 714 · 832 · 1774
CIVIL ENGINEER
IKE CONSULTING 714 · 241 · 0606
AUDIO / VISUAL
VENEKLASEN ASSOCIATES 310 · 450 · 1733
DATA TELEPHONE
PLANNET CONSULTING 714 · 982 · 5800

CITY OF FONTANA
DEVELOPMENT SERVICES ORGANIZATION BUILDING

8353 SIERRA AVENUE FONTANA, CALIFORNIA

CITY OF FONTANA CALIFORNIA

REV.	DATE	ISSUED FOR	REV.	DATE	ISSUED FOR
	08-12-05	SCHEMATICS			
	10-17-05	DD PACKAGE			
	12-05-05	PLAN CHECK			
	02-06-06	PC RESUBMIT.			
	04-17-06	PERMIT SET			
	04-17-06	BID SET			

Stamp

LICENSED ARCHITECT JOH PATRICK ALLEN NO. C7181 EXP. 03-31-07 STATE OF CALIFORNIA

APPROVED
MAY 01 2006
BUILDING & SAFETY
CITY OF FONTANA

APPROVED
REVIEWED BY _____ DATE

Approval of these plans shall not be construed to be a permit for, or an approval of any violation of any of the provisions of the state or local laws. One set of approved plans shall be kept on the job until completion.
WP LDAN

DATE: 11/01/05 SCALE: 1/8"=1'-0"
DRAWN BY: SCT
JOB NO. L454-000 CADD TITLE: A231

SHEET TITLE:
FIRST FLOOR FURNITURE PLAN

SHEET NUMBER:
A231

©Copyright 2005 Langdon Wilson

PERMIT SET / BID SET 04-17-06

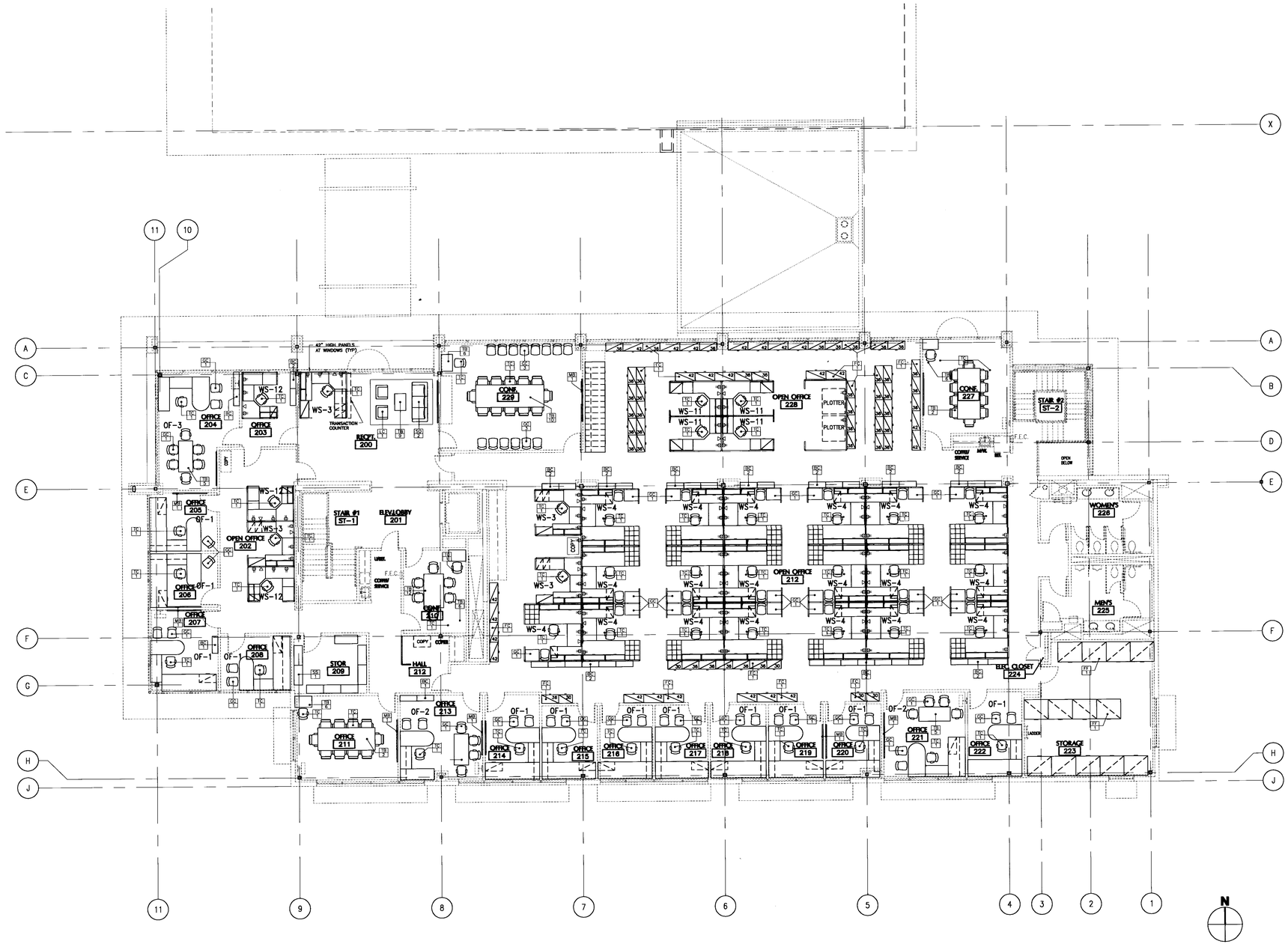

SECOND FLOOR FURNITURE PLAN 1

1/8"=1'-0"

FF&E NOTES

XR\X_FF@E NOTES

1. "G" INDICATES GLAZED TILE ABOVE 42" (±).
2. ALL PANELS TO BE 68" HIGH (±) UNLESS NOTED OR INDICATED.
3. TYPICAL ROOM PLATES INDICATE THE COMPONENTS TO BE INCLUDED IN OFFICES & WORKSTATIONS. PANEL CONFIGURATION AND SPECIFIC LAYOUT ARE AS INDICATED ON THIS PLAN.
4. ITEMS NOT SHOWN ON THE TYPICAL DETAILS OR IDENTIFIED ON THIS PLAN ARE NOTINCLUDED IN THE FF&E BID.
5. APPLIANCES ARE NOT INCLUDED IN THE FF&EBID.
6. A CONTINUOUS SLAT WALL BAND IS TO BE INCLUDED ABOVE ALL WORK SURFACES.
7. EACH WORKSTATION SHALL INCLUDE THE FOLLOWING SLAT WALL ACCESSORIES
   - IN/OUT BASKET
   - PHONE BRACKET
   - HOT FILE
   - ACCESSORY SHELF
8. FURNITURE IDENTIFICATION TAGS ARE TYPICAL FOR ALL SIMILAR ITEMS IN A ROOM OR AREA.

FOR REFERENCE AND COORDINATION WITH OTHER TRADES

LANGDON WILSON
ARCHITECTURE
PLANNING
INTERIORS

18800 VON KARMAN AVENUE, SUITE 200
IRVINE, CALIFORNIA 92612-1517
949 - 833 - 9193

STRUCTURAL
KPFF 949 - 252 - 1022
MECHANICAL
TKSC 949 - 756 - 0565
ELECTRICAL
GLP 714 - 751 - 1851
LANDSCAPE
FRANK RADMACHER 714 - 832 - 1774
CIVIL ENGINEER
IKE CONSULTING 714 - 241 - 0606
AUDIO / VISUAL
VENEKLASEN ASSOCIATES 310 - 450 - 1733
DATA TELEPHONE
PLANNET CONSULTING 714 - 982 - 5800

CITY OF FONTANA

DEVELOPMENT SERVICES
ORGANIZATION BUILDING

8353 SIERRA AVENUE FONTANA, CALIFORNIA

REV.	DATE	ISSUED FOR	REV.	DATE	ISSUED FOR
	08-12-05	SCHEMATICS			
	10-17-05	DD PACKAGE			
	12-05-05	PLAN CHECK			
	02-06-06	PC RESUBMIT.			
	04-17-06	PERMIT SET			
	04-17-06	BID SET			

Stamp

LICENSED ARCHITECT
JON PATRICK ALLEN
NO. C7181
REN. 03-31-07
STATE OF CALIFORNIA

APPROVED
MAY 11 2006
BUILDING & SAFETY
CITY OF FONTANA

REVIEWED BY _____ DATE

Approved of these plans shall not be construed to be a permit for, or an approval of any violation of any of the provisions of the state or local law. One set of approved plans must be kept on the job until completion.
WILLIAM

DATE: 11/01/05 SCALE: 1/8"=1'-0"
DRAWN BY: SCT
JOB NO. L454-000 CADD TITLE: A232

SHEET TITLE:
SECOND FLOOR FURNITURE PLAN

SHEET NUMBER:
A232

©Copyright 2005 Langdon Wilson

PERMIT SET / BID SET 04-17-06

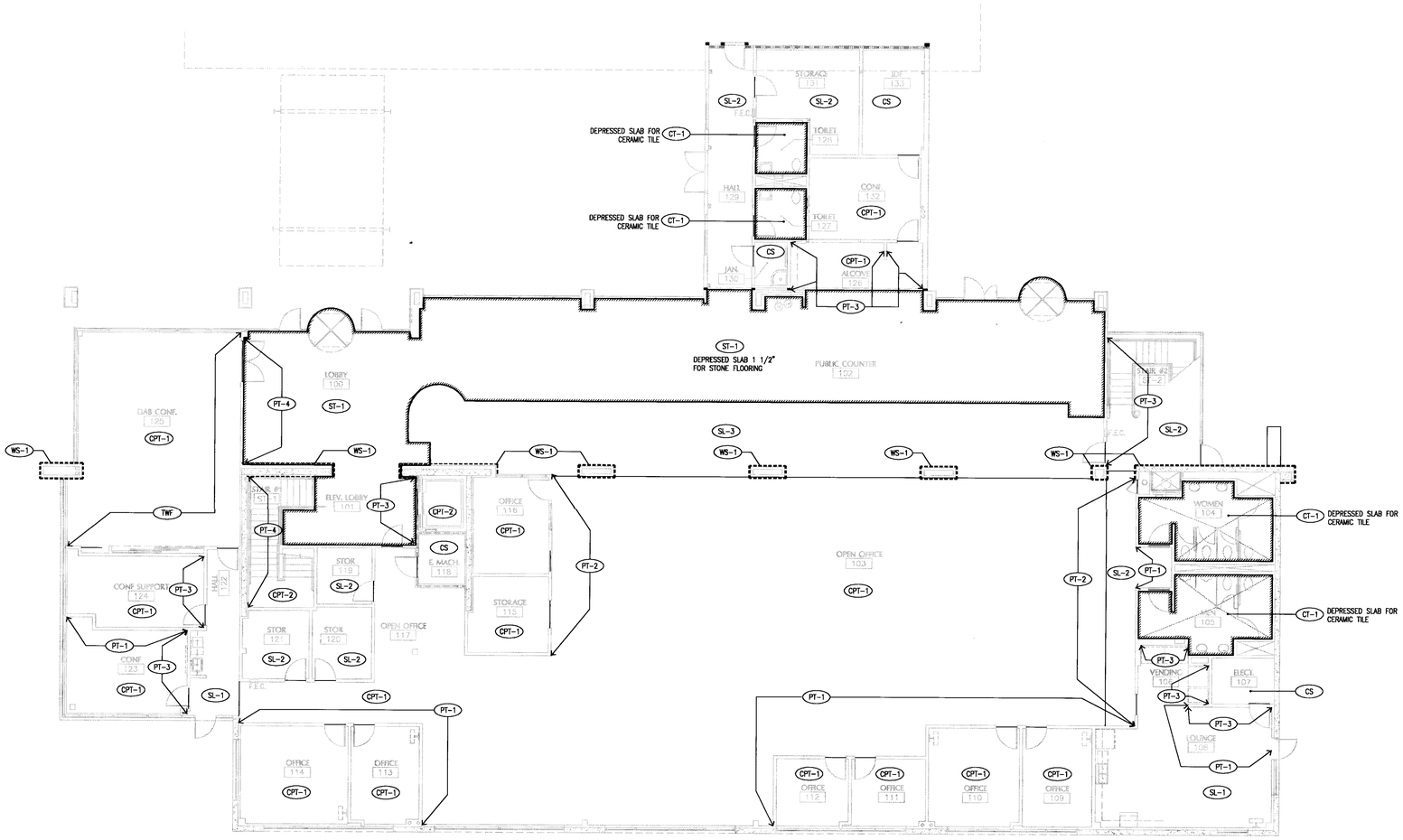

FINISH KEYNOTES

1. FOR FINISH SCHEDULE, SEE SHT. A810

LEGEND

ACT-1	ACOUSTIC CEILING TILE	PT-1	PAINT
CPT-1	CARPET-TILE	TPN-1	TOILET ROOM PARTITION
CS	CONCRETE, SEALED	TWF	TACKABLE WALL FINISH
CT-1	CERAMIC TILE	SS-1	SOLID SURFACE
EPX-1	EPOXY FLOORING	ST-1	STONE
FRP-1	FIBER REINFORCED PLASTIC	SL-1	LINOLEUM
GL-1	CLEAR GLASS	RB-1	RUBBER BASE
GL-2	TINTED GLASS	WC-1	WALL COVERING
PL-1	PLASTIC LAMINATE	WS-1	WALL STONE

DEPRESSED SLAB FOR FLOOR FINISH

WALL STONE FINISH, SEE INTERIOR ELEVATIONS

FIRST FLOOR FINISH PLAN

A241

1

1/8"=1'-0"

LANGDON WILSON
ARCHITECTURE
PLANNING
INTERIORS

18800 VON KARMAN AVENUE, SUITE 200
IRVINE, CALIFORNIA 92612-1517
949 - 833 - 9193

STRUCTURAL
KPFF 949 - 252 - 1022
MECHANICAL
TKSC 949 - 756 - 0565
ELECTRICAL
GLF 714 - 751 - 1851
LANDSCAPE
FRANK RADMACHER 714 - 832 - 1774
CIVIL ENGINEER
IKE CONSULTING 714 - 241 - 0606
AUDIO / VISUAL
VENEKLASEN ASSOCIATES 310 - 450 - 1733
DATA TELEPHONE
PLANNET CONSULTING 714 - 982 - 5800

CITY OF FONTANA
DEVELOPMENT SERVICES
ORGANIZATION BUILDING

8353 SIERRA AVENUE FONTANA, CALIFORNIA

REV.	DATE	ISSUED FOR	REV.	DATE	ISSUED FOR
	02-06-06	PC RESUBMIT.			
	04-17-06	PERMIT SET			
	04-17-06	BID SET			

Stamp

LICENSED ARCHITECT JON PATRICK ALLEN NO. C7181 REN. 03-31-07 STATE OF CALIFORNIA

APPROVED
MAY 01 2006
BUILDING & SAFETY
CITY OF FONTANA

APPROVED
REVIEWED BY _____ DATE

Approved of these plans shall not be construed to be a permit to, or an approval of any violation of any of the provisions of the state or local laws. One set of approved plans must be kept on the job until completion.
WILL DAN

DATE: 1-04-06 SCALE: 1/8"=1'-0"
DRAWN BY: SCT
JOB NO. L454-000 CADD TITLE: A241

SHEET TITLE:
FIRST FLOOR FINISH PLAN

SHEET NUMBER:
A241

©Copyright 2005 Langdon Wilson

04-17-06
PERMIT SET / BID SET

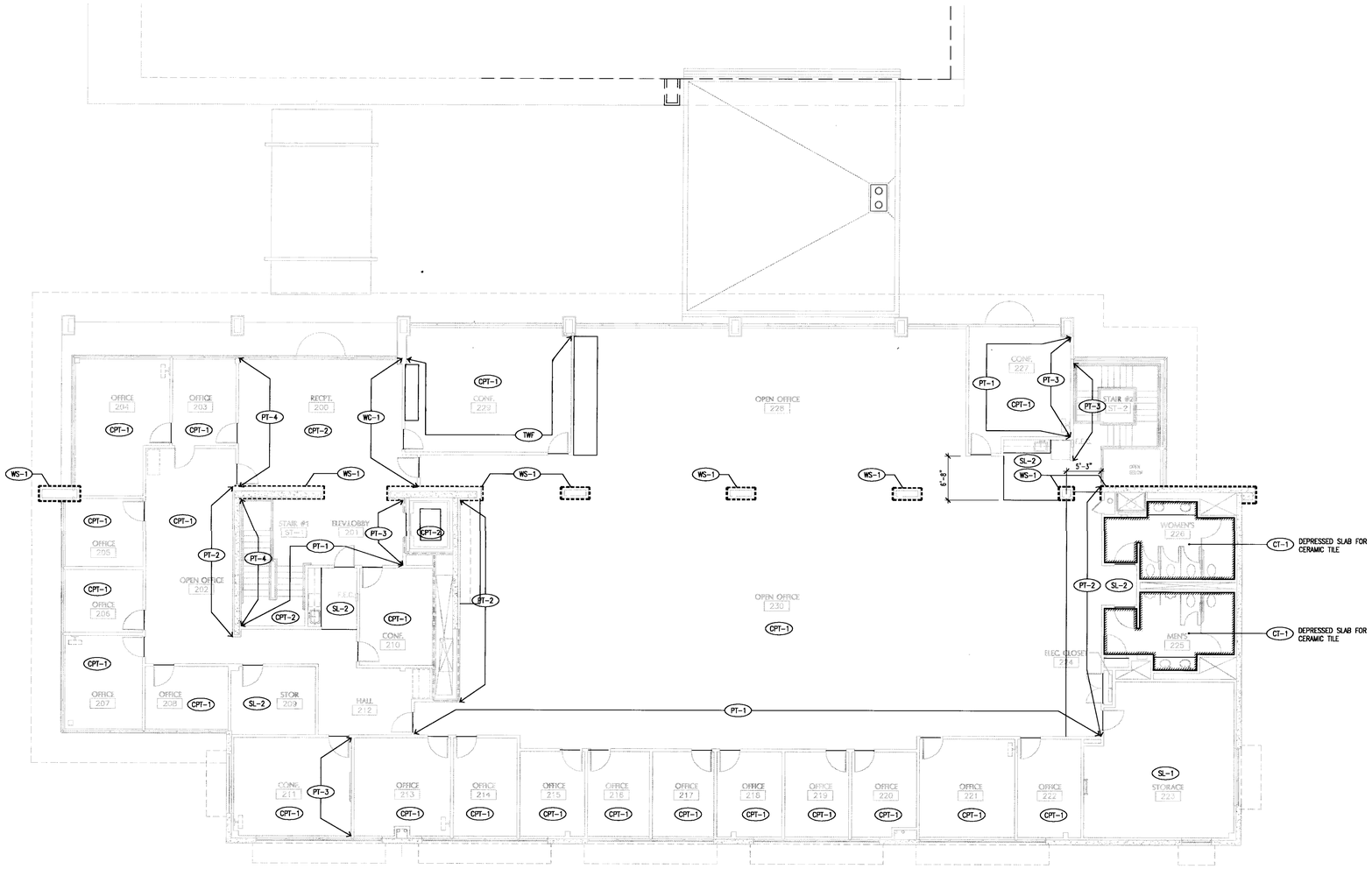

SECOND FLOOR FINISH PLAN

A242

1

1/8"=1'-0"

FINISH KEYNOTES

1. FOR FINISH SCHEDULE, SEE SHT. A810

LEGEND

ACT-1	ACOUSTIC CEILING TILE	PT-1	PAINT
CPT-1	CARPET-TILE	TPN-1	TOILET ROOM PARTITION
CS	CONCRETE, SEALED	TWF	TACKABLE WALL FINISH
CT-1	CERAMIC TILE	SS-1	SOLID SURFACE
EPX-1	EPOXY FLOORING	ST-1	STONE
FRP-1	FIBER REINFORCED PLASTIC	SL-1	LINOLEUM
GL-1	CLEAR GLASS	RB-1	RUBBER BASE
GL-2	TINTED GLASS	WC-1	WALL COVERING
PL-1	PLASTIC LAMINATE	WS-1	WALL STONE

DEPRESSED SLAB FOR FLOOR FINISH

WALL STONE FINISH, SEE INTERIOR ELEVATIONS

APPROVED
MAY 01 2006
BUILDING & SAFETY
CITY OF FONTANA

APPROVED
REVIEWED BY _____ DATE

Approved of these plans shall not be construed to be a permit for, or an approval of any violation of any of the provisions of the state or local laws. One set of approved plans must be kept on the job until completion.
WILLDAN

LANGDON WILSON
ARCHITECTURE
PLANNING
INTERIORS

18800 VON KARMAN AVENUE, SUITE 200
IRVINE, CALIFORNIA 92612-1517
949 - 833 - 9193

STRUCTURAL
KPFF 949 - 252 - 1022
MECHANICAL
TKSC 949 - 756 - 0565
ELECTRICAL
GLP 714 - 751 - 1851
LANDSCAPE
FRANK RADMACHER 714 - 832 - 1774
CIVIL ENGINEER
IKE CONSULTING 714 - 241 - 0606
AUDIO / VISUAL
VENEKLASEN ASSOCIATES 310 - 450 - 1733
DATA TELEPHONE
PLANNET CONSULTING 714 - 982 - 5800

CITY OF FONTANA
DEVELOPMENT SERVICES
ORGANIZATION BUILDING

8353 SIERRA AVENUE FONTANA, CALIFORNIA

REV.	DATE	ISSUED FOR	REV.	DATE	ISSUED FOR
	02-06-06	PC RESUBMIT.			
	04-17-06	PERMIT SET			
	04-17-06	BID SET			

Stamp

LICENSED ARCHITECT
JON PATRICK ALLEN
NO. C7181
REN. 03-31-07
STATE OF CALIFORNIA

DATE: 1-04-06 SCALE: 1/8"=1'-0"
DRAWN BY: SCT
JOB NO. L454-000 CADD TITLE: A242

SHEET TITLE:
SECOND FLOOR FINISH PLAN

SHEET NUMBER:
A242

©Copyright 2005 Langdon Wilson

PERMIT SET / BID SET 04-17-06

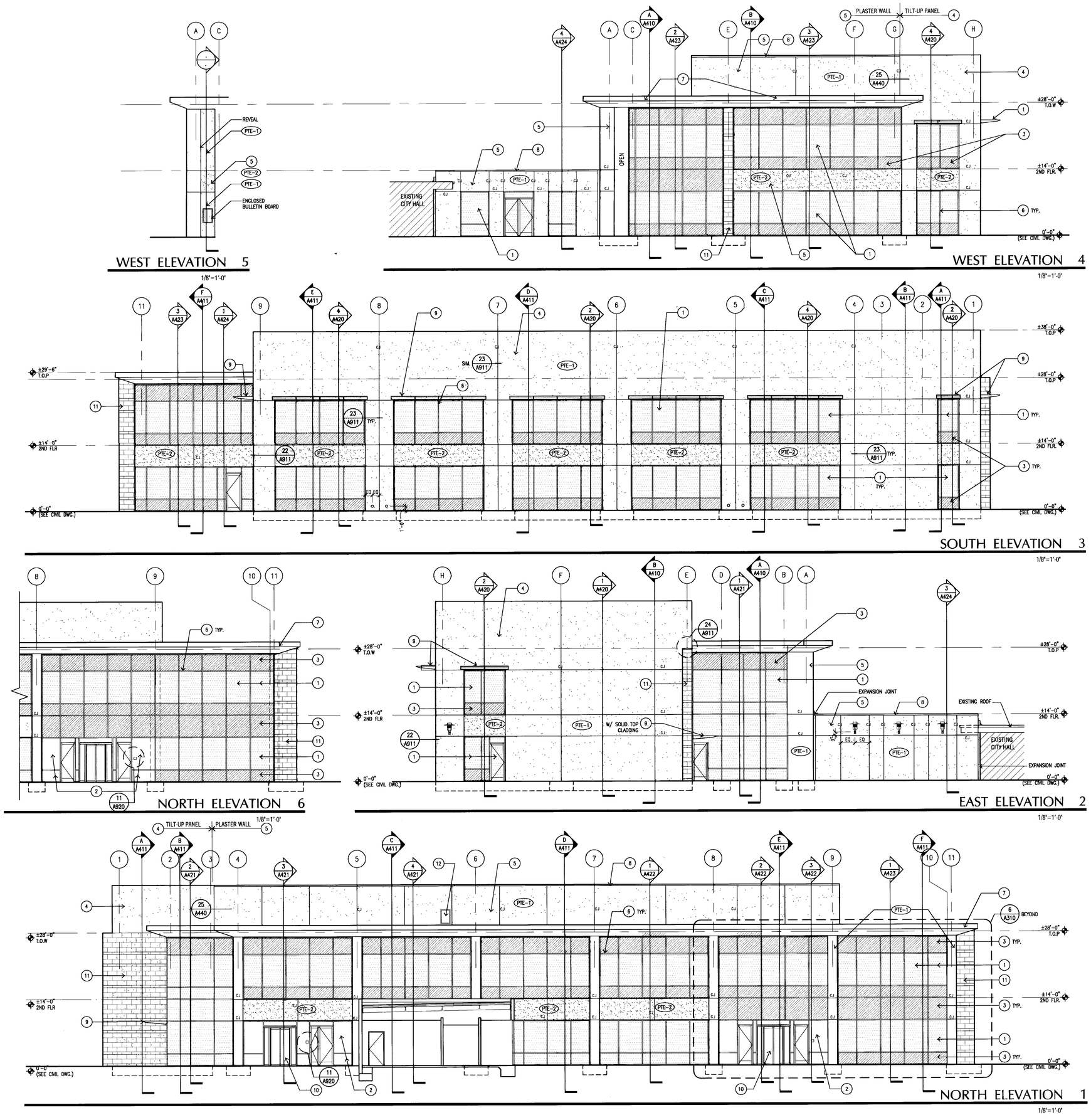

EXTERIOR ELEVATIONS KEYNOTES

1. VISION GLASS-1:
2. VISION GLASS-2:
3. SPANDREL GLASS-1:
4. TILT-UP CONCRETE PANEL W/ PAINTED FINISH.
5. SMOOTH PLASTER FINISH TO MATCH CONC. PANELS
6. ALUMINUM MULLION SYSTEM W/ FACTORY FINISH.
7. METAL FASCIA WITH FACTORY PAINTED FINISH.
8. METAL COPING
9. SUN CONTROL SHADE FACTORY FINISH.
10. REVOLVING DOOR WITH FACTORY FINISH
11. STONE TILE ADHERED TO SUBSTRATE.
12. NYSTORM ACCESS DOOR 'X1' SERIES – 24" X 36"

* FOR FINISH SCHEDULE, SEE SHT. A810

PTE-1 EXTERIOR PAINT FRAZEE 8701W SOFTLY CHIMING

PTE-2 EXTERIOR PAINT FRAZEE 8705M* ROCKBRIDGE

LANGDON WILSON
ARCHITECTURE
PLANNING
INTERIORS

18800 VON KARMAN AVENUE, SUITE 200
IRVINE, CALIFORNIA 92612-1517
949 - 833 - 9193

STRUCTURAL
KPFF 949 - 252 - 1022
MECHANICAL
TKSC 949 - 756 - 0565
ELECTRICAL
GLP 714 - 751 - 1851
LANDSCAPE
FRANK RADMACHER 714 - 832 - 1774
CIVIL ENGINEER
IKE CONSULTING 714 - 241 - 0606
AUDIO / VISUAL
VENEKLASEN ASSOCIATES 310 - 450 - 1733
DATA TELEPHONE
PLANNET CONSULTING 714 - 982 - 5800

CITY OF FONTANA
DEVELOPMENT SERVICES
ORGANIZATION BUILDING

8353 SIERRA AVENUE FONTANA, CALIFORNIA

REV.	DATE	ISSUED FOR	REV.	DATE	ISSUED FOR
	08-12-05	SCHEMATICS			
	10-17-05	DD PACKAGE			
	12-05-05	PLAN CHECK			
	02-06-06	PC RESUBMIT.			
	04-17-06	PERMIT SET			
	04-17-06	BID SET			

Stamp

LICENSED ARCHITECT JON PATRICK ALLEN NO. C7181 REN. 03-31-07 STATE OF CALIFORNIA

APPROVED
MAY 11 2006
BUILDING & SAFETY
CITY OF FONTANA

APPROVED
REVIEWED BY _____ DATE

DATE: 11/01/05 SCALE: 1/8"=1'-0"
DRAWN BY: SCT
JOB NO. L454-000 CADD TITLE: A310

SHEET TITLE:
EXTERIOR ELEVATIONS

SHEET NUMBER:
A310

©Copyright 2005 Langdon Wilson

PERMIT SET / BID SET 04-17-06

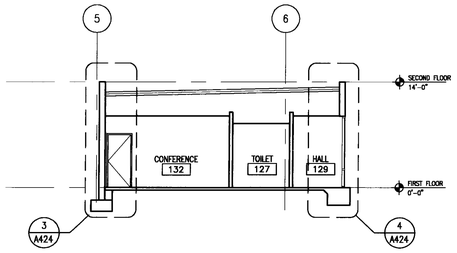

BUILDING SECTION C

1/8" = 1'-0"

KEYNOTES

1. CONCRETE FILL OVER METAL DECK, SEE STRUCTURAL.
2. ROOFING OVER ROOF DECK
3. R-17.4 BOARD INSULATION UNDER ROOF DECK.
4. LIGHT WEIGHT CONCRETE AND METAL DECK OVER OPEN WEB STEEL JOIST, SEE STRUCT.
5. MECHANICAL PACKAGE HVAC UNIT, SEE MECHANICAL DRAWINGS.
6. 5/8 TYPE X GYP. BD, OVER 1-1/2" MET STUDS WITH 1-1/2" RIGID INSULATION BOARD.
7. CEILING HEIGHT.
8. CONCRETE SLAB ON GRADE OVER SAND AND VISQUEEN MOISTURE BARRIER. SEE SOILS REPORT RECOMMENDATIONS.
9. PAINTED ALUMINUM CURTAIN WALL WITH HIGH PERFORMANCE INSULATION GLAZING.
10. CONCRETE TILT-UP PANEL WITH PAINT FINISH. CONCRETE PANEL TO BE PATCHED AND SACKED FOR SMOOTH PAINT FINISH.
11. SUSPENDED CEILING, SEE REFLECTED CEILING PLAN.
12. EXTERIOR PLASTER SOFFIT.
13. MECHANICAL DUCTS TO RUN THROUGH TRUSSES, TYP.

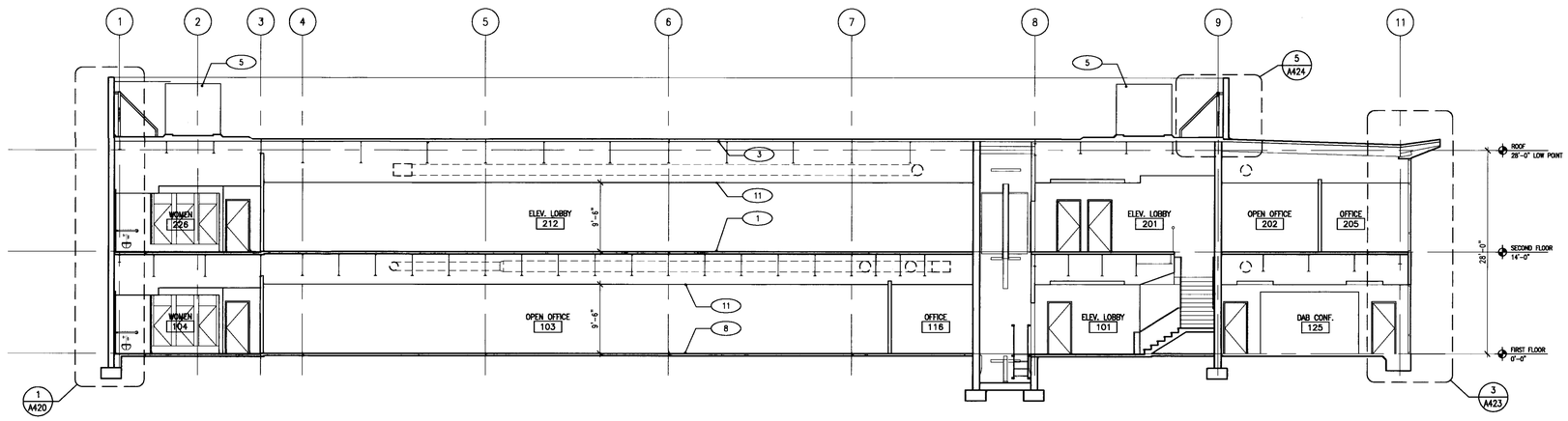

BUILDING SECTION B

1/8" = 1'-0"

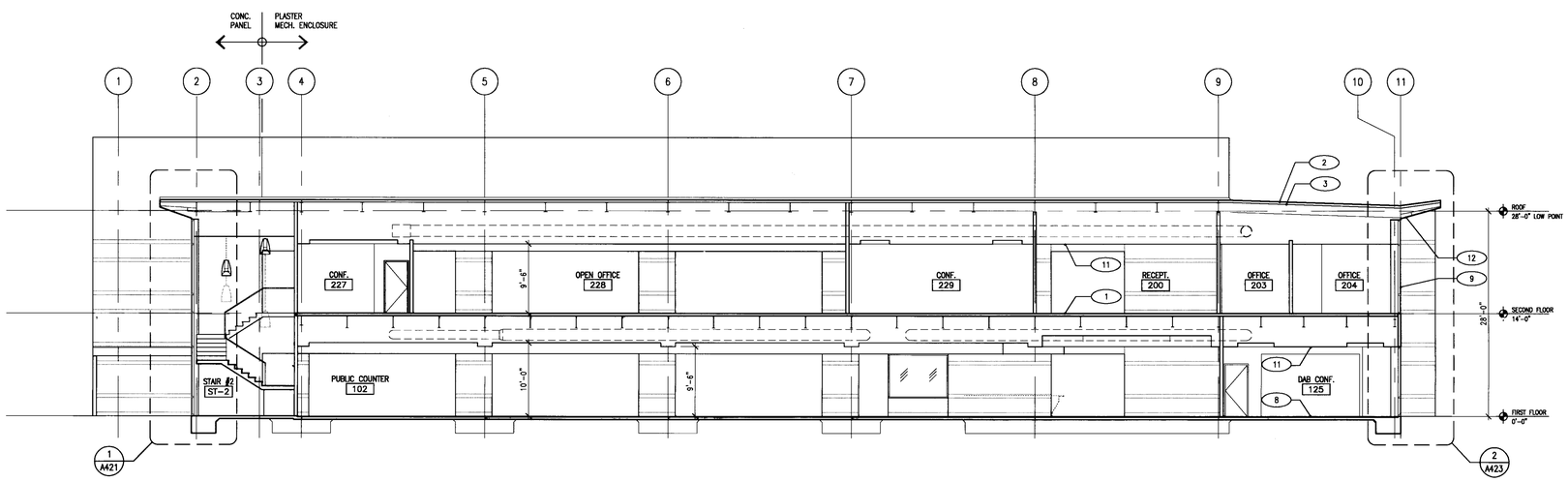

BUILDING SECTION A

1/8" = 1'-0"

APPROVED
MAY 01 2006
BUILDING & SAFETY
CITY OF FONTANA

REVIEWED BY

Approved of these plans shall not be construed to be a permit [illegible] approval of any violation of any [illegible] the provisions of any [illegible] laws. Greater restrictions may [illegible] to apply on the [illegible] WILL DAN

LANGDON WILSON
ARCHITECTURE
PLANNING
INTERIORS

18800 VON KARMAN AVENUE, SUITE 200
IRVINE, CALIFORNIA 92612-1517
949 - 833 - 9193

STRUCTURAL
KPFF 949 - 252 - 1022
MECHANICAL
TKSC 949 - 756 - 0565
ELECTRICAL
GLP 714 - 751 - 1851
LANDSCAPE
FRANK RADMACHER 714 - 832 - 1774
CIVIL ENGINEER
IKE CONSULTING 714 - 241 - 0606
AUDIO / VISUAL
VENEKLASEN ASSOCIATES 310 - 450 - 1733
DATA TELEPHONE
PLANNET CONSULTING 714 - 982 - 5800

CITY OF FONTANA

DEVELOPMENT SERVICES ORGANIZATION BUILDING

8353 SIERRA AVENUE FONTANA, CALIFORNIA

REV.	DATE	ISSUED FOR	REV.	DATE	ISSUED FOR
	10-17-05	DD PACKAGE			
	12-05-05	PLAN CHECK			
	02-06-06	PC RESUBMIT.			
	04-17-06	PERMIT SET			
	04-17-06	BID SET			

Stamp

LICENSED ARCHITECT
JOHN PATRICK ALLEN
LICENSE NO. C7181
EXP. 03-31-2007
STATE OF CALIFORNIA

DATE: 11-01-05 SCALE: 1/8"=1'-0"

DRAWN BY: SCT

JOB NO. L454-000 CADD TITLE: A410

SHEET TITLE:

BUILDING SECTIONS

SHEET NUMBER:

A410

©Copyright 2005 Langdon Wilson

PERMIT SET / BID SET 04-17-06

KEYNOTES

1. CONCRETE FILL OVER METAL DECK, SEE STRUCTURAL.
2. ROOFING OVER ROOF DECK
3. R-17.4 BOARD INSULATION UNDER ROOF DECK.
4. LIGHT WEIGHT CONCRETE AND METAL DECK OVER OPEN WEB STEEL JOIST, SEE STRUCT.
5. MECHANICAL PACKAGE HVAC UNIT, SEE MECHANICAL DRAWINGS.
6. 5/8 TYPE X GYP. BD, OVER 1-1/2" MET STUDS WITH 1-1/2" RIGID INSULATION BOARD.
7. CEILING HEIGHT.
8. CONCRETE SLAB ON GRADE OVER SAND AND VISQUEEN MOISTURE BARRIER. SEE SOILS REPORT RECOMMENDATIONS.
9. PAINTED ALUMINUM CURTAIN WALL WITH HIGH PERFORMANCE INSULATION GLAZING.
10. CONCRETE TILT-UP PANEL WITH PAINT FINISH. CONCRETE PANEL TO BE PATCHED AND SACKED FOR SMOOTH PAINT FINISH.
11. SUSPENDED CEILING, SEE REFLECTED CEILING PLAN.
12. EXTERIOR PLASTER SOFFIT.
13. MECHANICAL DUCTS TO RUN THROUGH TRUSSES, TYP.

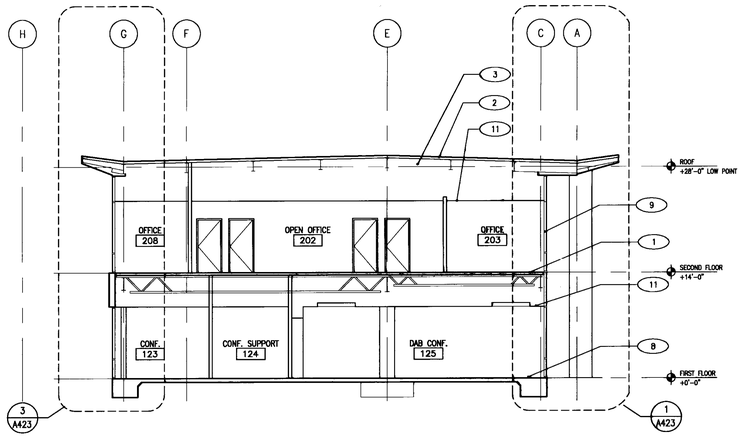

BUILDING SECTION F

1/8"=1'-0"

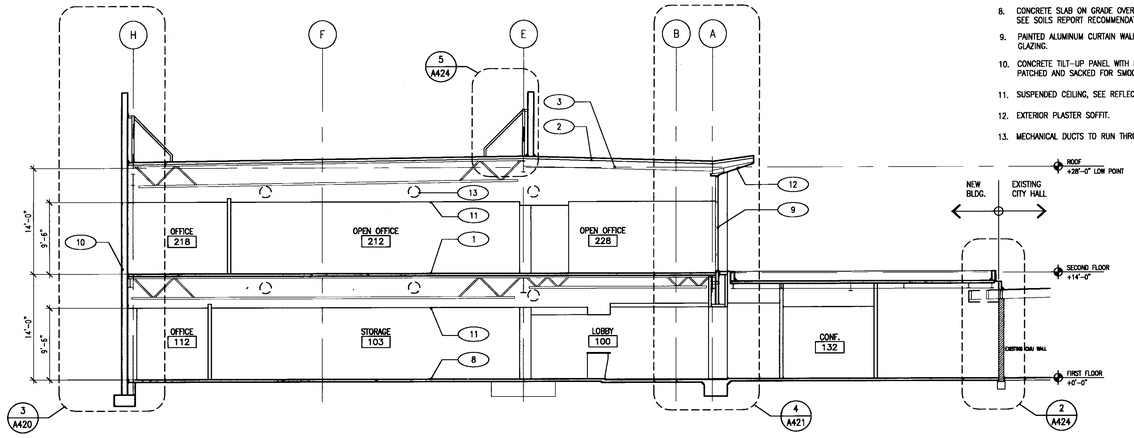

BUILDING SECTION C

1/8"=1'-0"

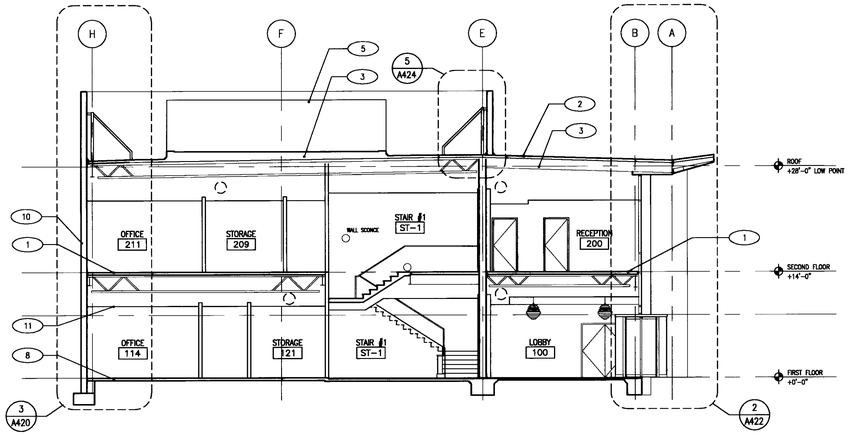

BUILDING SECTION E

1/8"=1'-0"

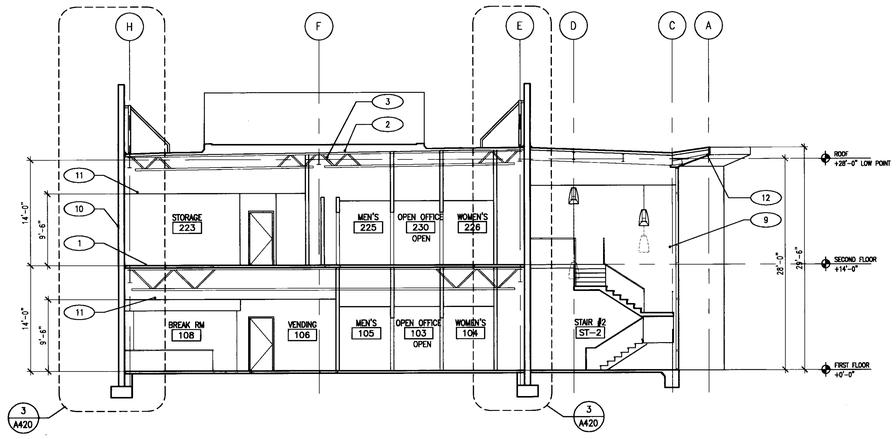

BUILDING SECTION B

1/8"=1'-0"

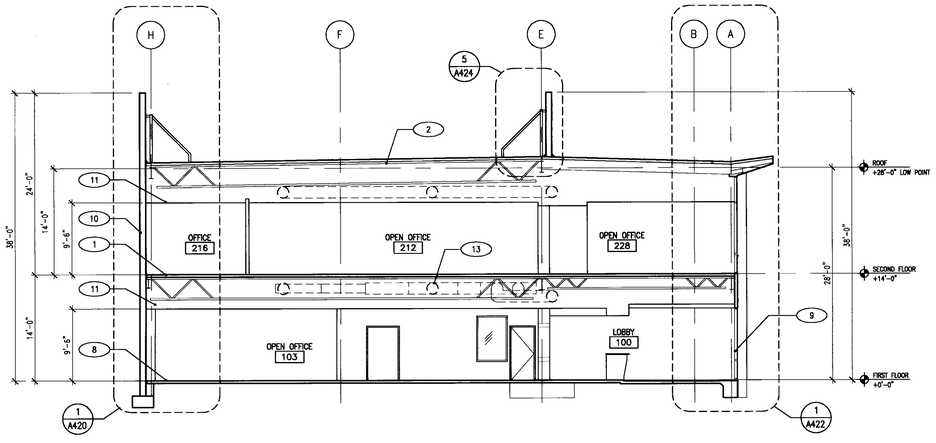

BUILDING SECTION D

1/8"=1'-0"

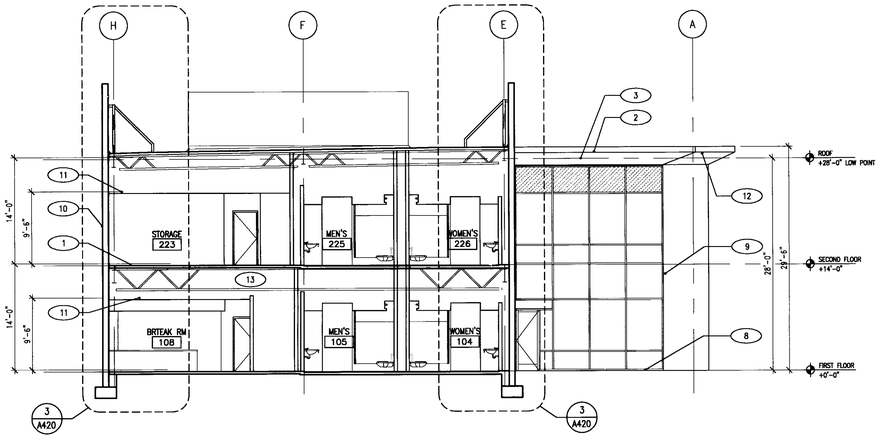

BUILDING SECTION A

1/8"=1'-0"

APPROVED
MAY 0 1 2006
BUILDING & SAFETY
CITY OF FONTANA

APPROVED
REVIEWED BY _____ DATE

Approved of these plans shall not be construed to be a permit to, or an approval of any violation of any of the provisions of the [illegible] laws or ordinances [illegible] be [illegible]

LANGDON WILSON
ARCHITECTURE
PLANNING
INTERIORS

18800 VON KARMAN AVENUE, SUITE 200
IRVINE, CALIFORNIA 92612-1517
949 - 833 - 9193

STRUCTURAL
KPFF 949 - 252 - 1022
MECHANICAL
TKSC 949 - 756 - 0565
ELECTRICAL
GLP 714 - 751 - 1851
LANDSCAPE
FRANK RADMACHER 714 - 832 - 1774
CIVIL ENGINEER
IKE CONSULTING 714 - 241 - 0606
AUDIO / VISUAL
VENEKLASEN ASSOCIATES 310 - 450 - 1733
DATA TELEPHONE
PLANNET CONSULTING 714 - 982 - 5800

CITY OF FONTANA
DEVELOPMENT SERVICES ORGANIZATION BUILDING

8353 SIERRA AVENUE FONTANA, CALIFORNIA

REV.	DATE	ISSUED FOR	REV.	DATE	ISSUED FOR
	08-12-05	SCHEMATICS			
	10-17-05	DD PACKAGE			
	12-05-05	PLAN CHECK			
	02-06-06	PC RESUBMIT.			
	04-17-06	PERMIT SET			
	04-17-06	BID SET			

Stamp

LICENSED ARCHITECT
PATRICK ALLEN
NO. C7181
EXP. 03-31-07
STATE OF CALIFORNIA

DATE: 11/01/05 SCALE: 1/8"=1'-0"

DRAWN BY: SCT

JOB NO. L454-000 CADD TITLE A411

SHEET TITLE:

BUILDING SECTIONS

SHEET NUMBER:

A411

©Copyright 2005 Langdon Wilson

PERMIT SET / BID SET 04-17-06

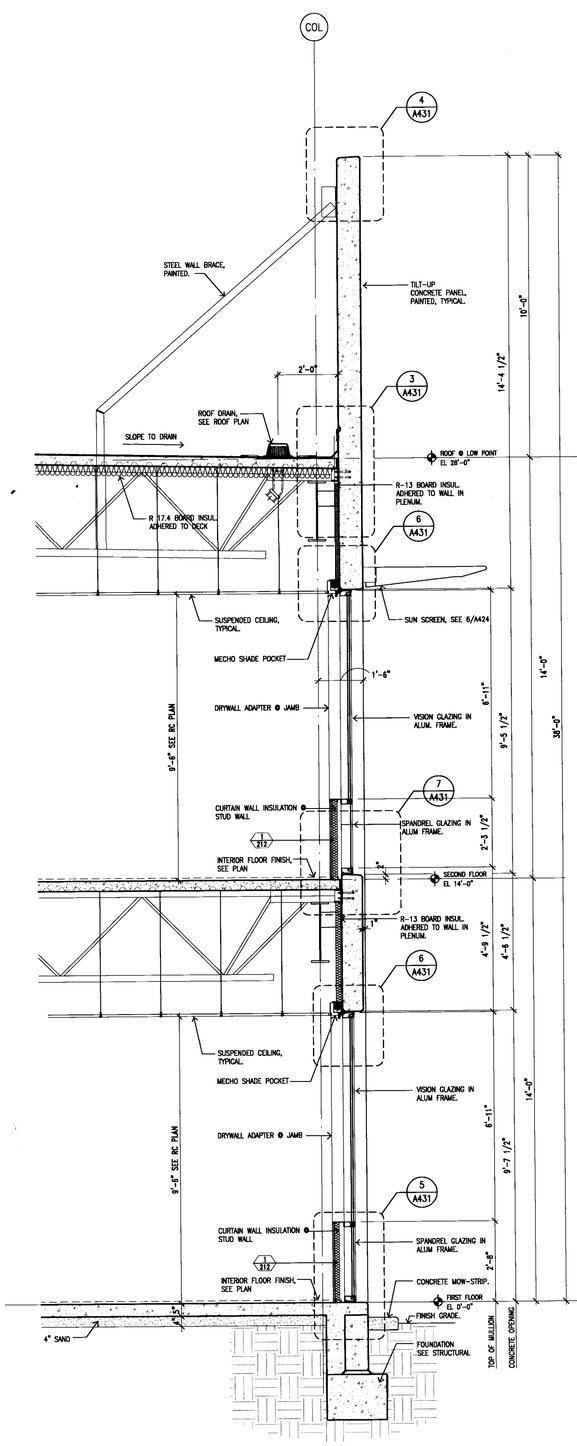

WALL SECTION 4
A320 1/2"=1'-0"

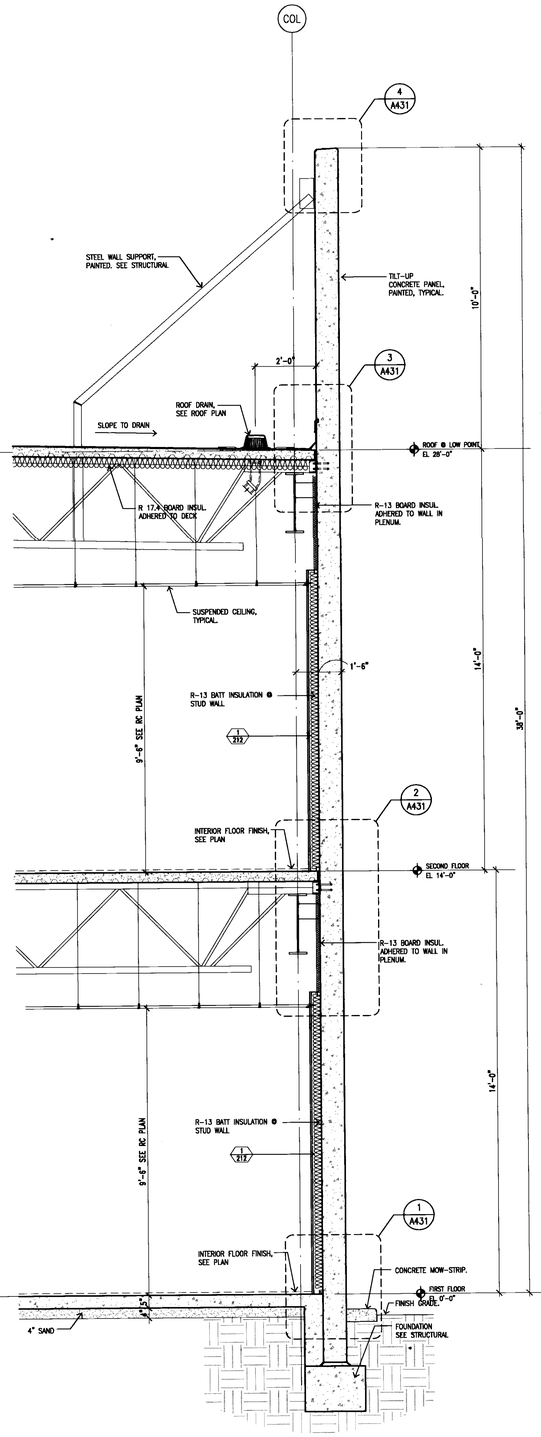

WALL SECTION 3
A320 1/2"=1'-0"

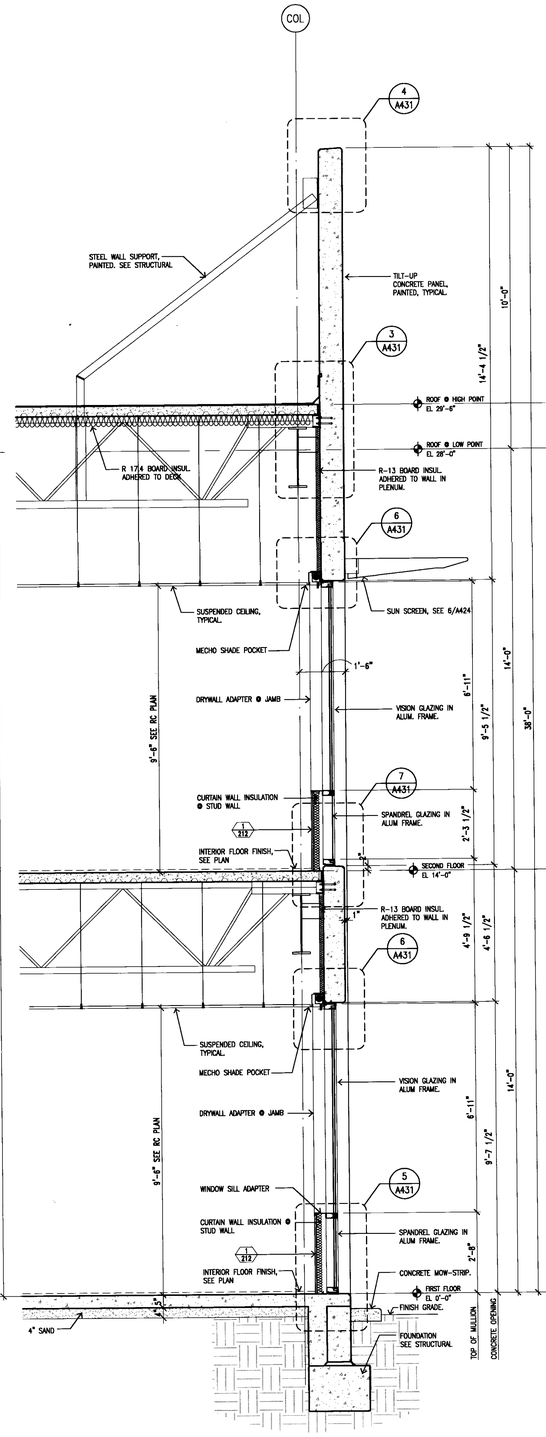

WALL SECTION 2
A320 1/2"=1'-0"

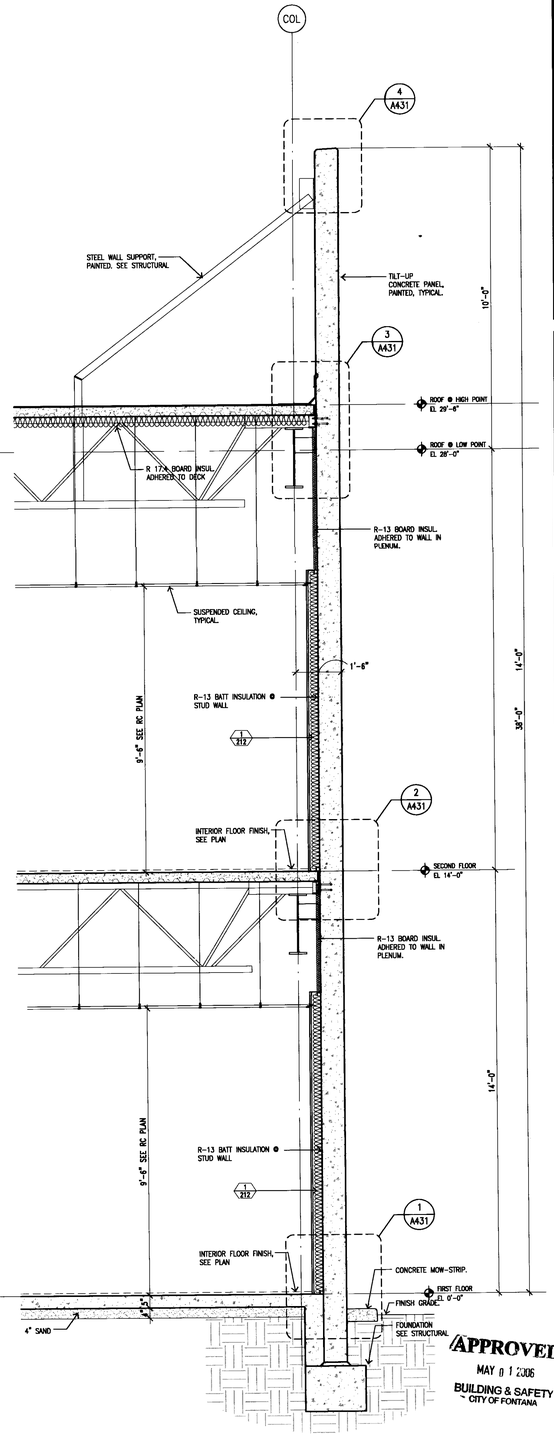

WALL SECTION 1
A320 1/2"=1'-0"

APPROVED
MAY 01 2006
BUILDING & SAFETY
CITY OF FONTANA

APPROVED
REVIEWED BY _____ DATE
Approval of these plans shall not be construed to be a permit for, or an approval of any violation of any of the provisions of the state or local laws. Approved plans must be kept on the job until completion.
WILDAN

LANGDON WILSON
ARCHITECTURE
PLANNING
INTERIORS

18800 VON KARMAN AVENUE, SUITE 200
IRVINE, CALIFORNIA 92612-1517
949 - 833 - 9193

STRUCTURAL
KPFF 949 - 252 - 1022
MECHANICAL
TKSC 949 - 756 - 0565
ELECTRICAL
GLP 714 - 751 - 1851
LANDSCAPE
FRANK RADMACHER 714 - 832 - 1774
CIVIL ENGINEER
IKE CONSULTING 714 - 241 - 0606
AUDIO / VISUAL
VENEKLASEN ASSOCIATES 310 - 450 - 1733
DATA TELEPHONE
PLANNET CONSULTING 714 - 982 - 5800

CITY OF FONTANA
DEVELOPMENT SERVICES ORGANIZATION BUILDING

8353 SIERRA AVENUE FONTANA, CALIFORNIA

CITY OF FONTANA CALIFORNIA

REV.	DATE	ISSUED FOR	REV.	DATE	ISSUED FOR
	10-17-05	DD PACKAGE			
	12-05-05	PLAN CHECK			
	12-06-05	PC RESUBMIT.			
	04-17-06	PERMIT SET			
	04-17-06	BID SET			

Stamp

LICENSED ARCHITECT
PATRICK ALLEN
NO. C7181
EXPIRES 03-31-07
STATE OF CALIFORNIA

DATE: 11/01/05 SCALE: AS NOTED
DRAWN BY: SCT
JOB NO. L454-000 CADD TITLE: A420

SHEET TITLE
WALL SECTIONS

SHEET NUMBER:
A420

©Copyright 2005 Langdon Wilson

PERMIT SET / BID SET 04-17-06

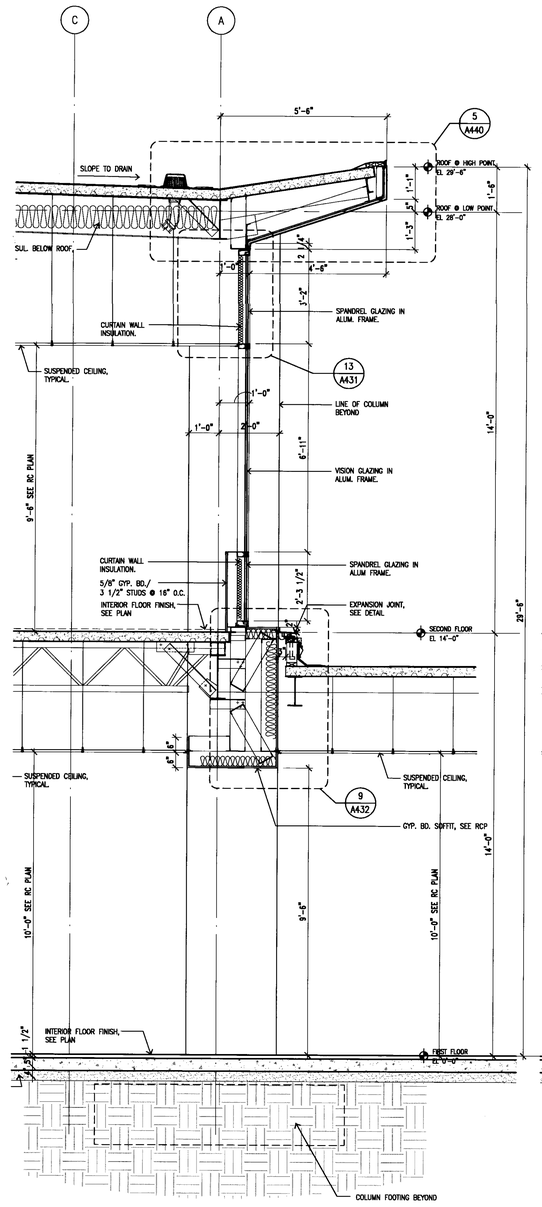

WALL SECTION 4
A320 1/2"=1'-0"

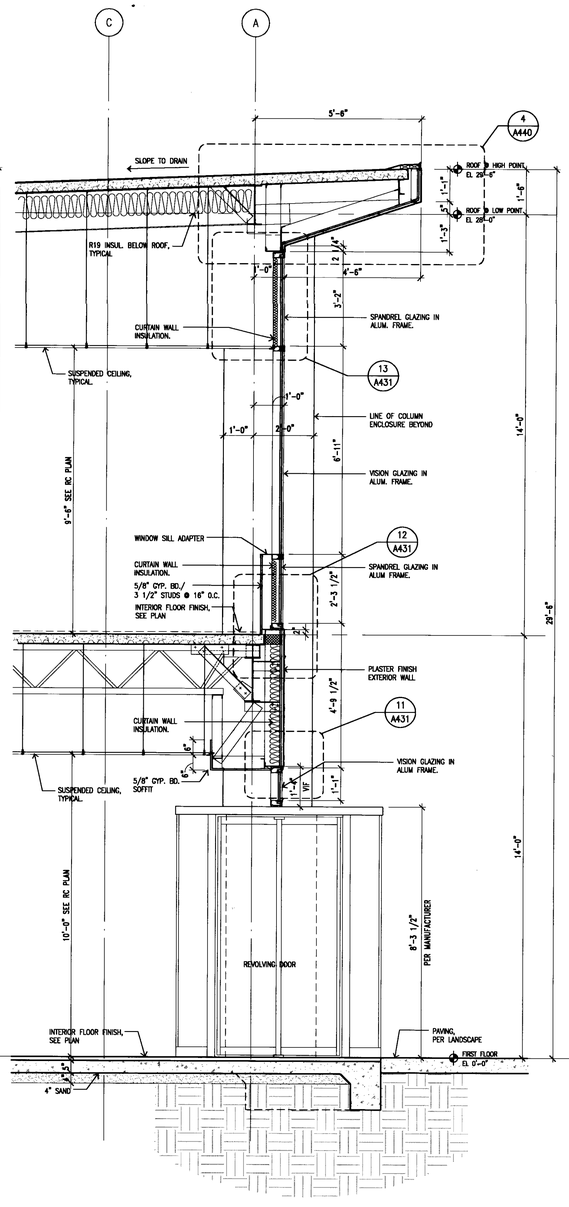

WALL SECTION 3
A320 1/2"=1'-0"

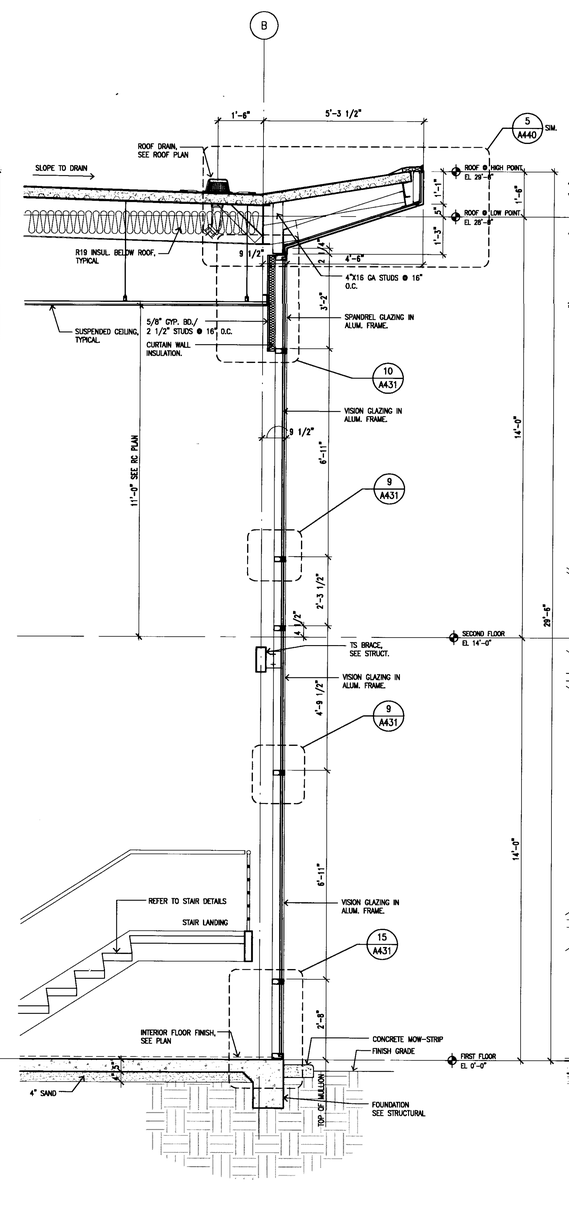

WALL SECTION 2
A320 1/2"=1'-0"

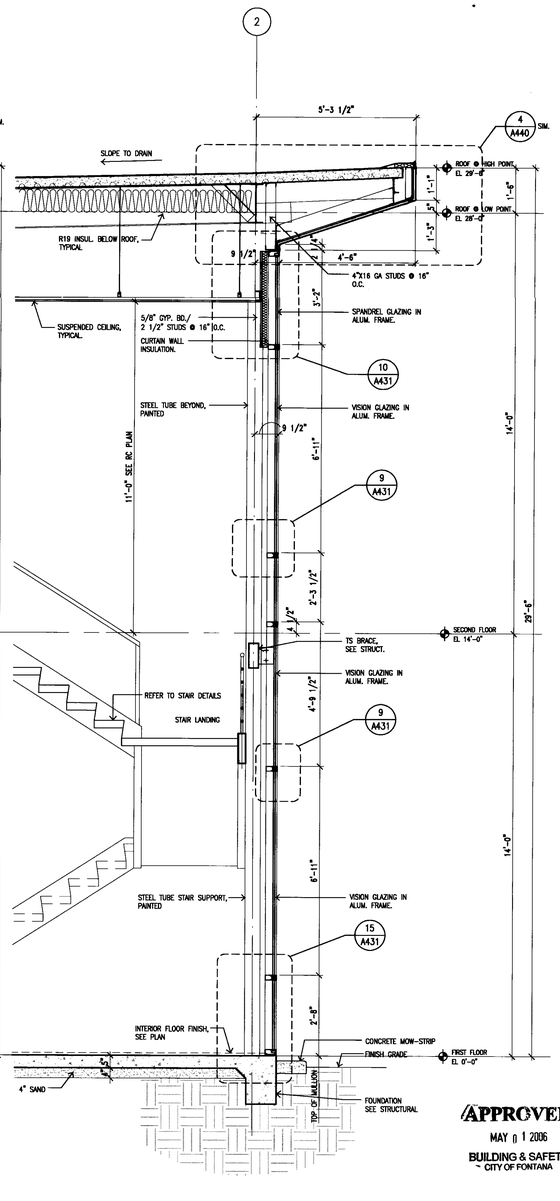

WALL SECTION 1
A320 1/2"=1'-0"

APPROVED
MAY 01 2006
BUILDING & SAFETY
CITY OF FONTANA

APPROVED
REVIEWED BY
Approval of these plans shall not be construed to be a permit for, or an approval of any violation of any of the provisions of the building or other laws. One set of approved plans shall be kept on the job site at all times during the progress of the work.
WILLDAN

LANGDON WILSON
ARCHITECTURE
PLANNING
INTERIORS

18800 VON KARMAN AVENUE, SUITE 200
IRVINE, CALIFORNIA 92612-1517
949 - 833 - 9193

STRUCTURAL
KPFF 949 - 252 - 1022
MECHANICAL
TKSC 949 - 756 - 0565
ELECTRICAL
GLP 714 - 751 - 1851
LANDSCAPE
FRANK RADMACHER 714 - 832 - 1774
CIVIL ENGINEER
IKE CONSULTING 714 - 241 - 0606
AUDIO / VISUAL
VENEKLASEN ASSOCIATES 310 - 450 - 1733
DATA TELEPHONE
PLANNET CONSULTING 714 - 982 - 5800

CITY OF FONTANA

DEVELOPMENT SERVICES
ORGANIZATION BUILDING

8353 SIERRA AVENUE FONTANA, CALIFORNIA

REV.	DATE	ISSUED FOR	REV.	DATE	ISSUED FOR
	10-17-05	DD PACKAGE			
	12-05-05	PLAN CHECK			
	02-06-06	PC RESUBMIT.			
	04-17-06	PERMIT SET			
	04-17-06	BID SET			

Stamp

LICENSED ARCHITECT
JOHN PATRICK ALLEN
NO. C7181
EXP. 03-31-08
STATE OF CALIFORNIA

DATE: 11/01/05 SCALE: AS NOTED
DRAWN BY: SCT
JOB NO. L454-000 CADD TITLE: A421

SHEET TITLE:
WALL SECTIONS

SHEET NUMBER:
A421

©Copyright 2005 Langdon Wilson

PERMIT SET / BID SET 04-17-06

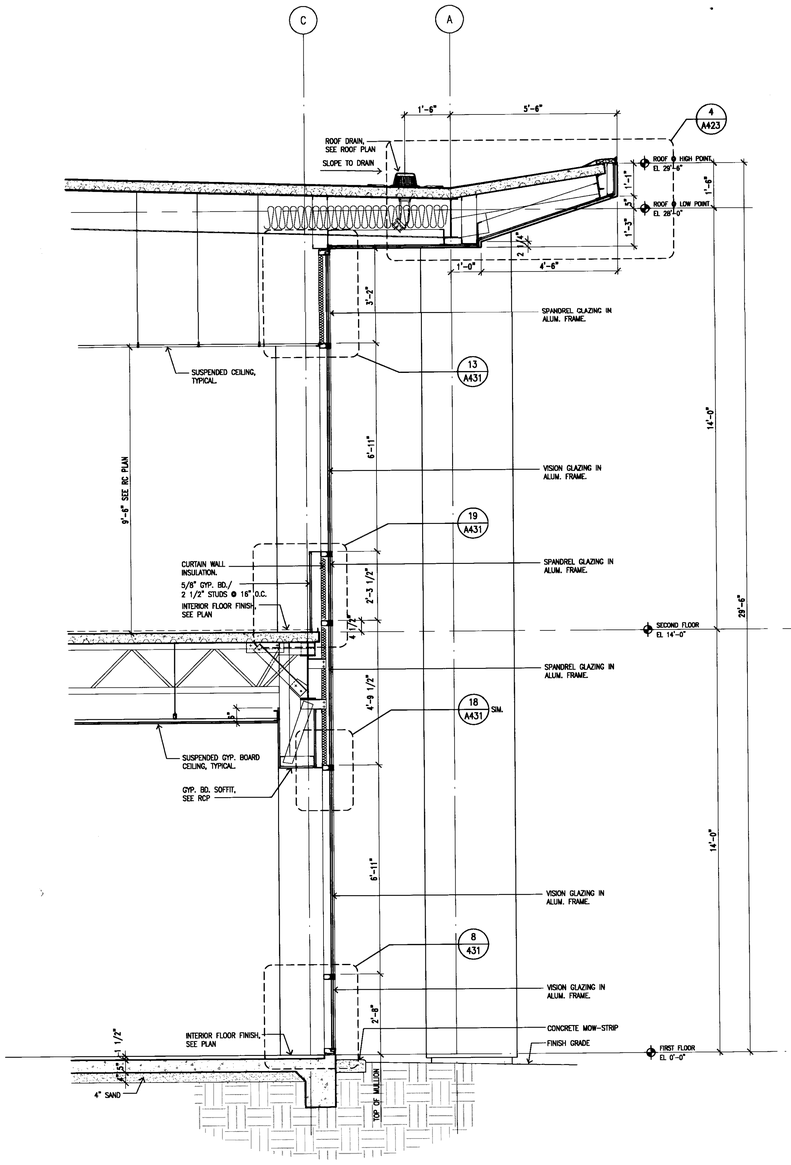

WALL SECTION 3

A320 1/2"=1'-0"

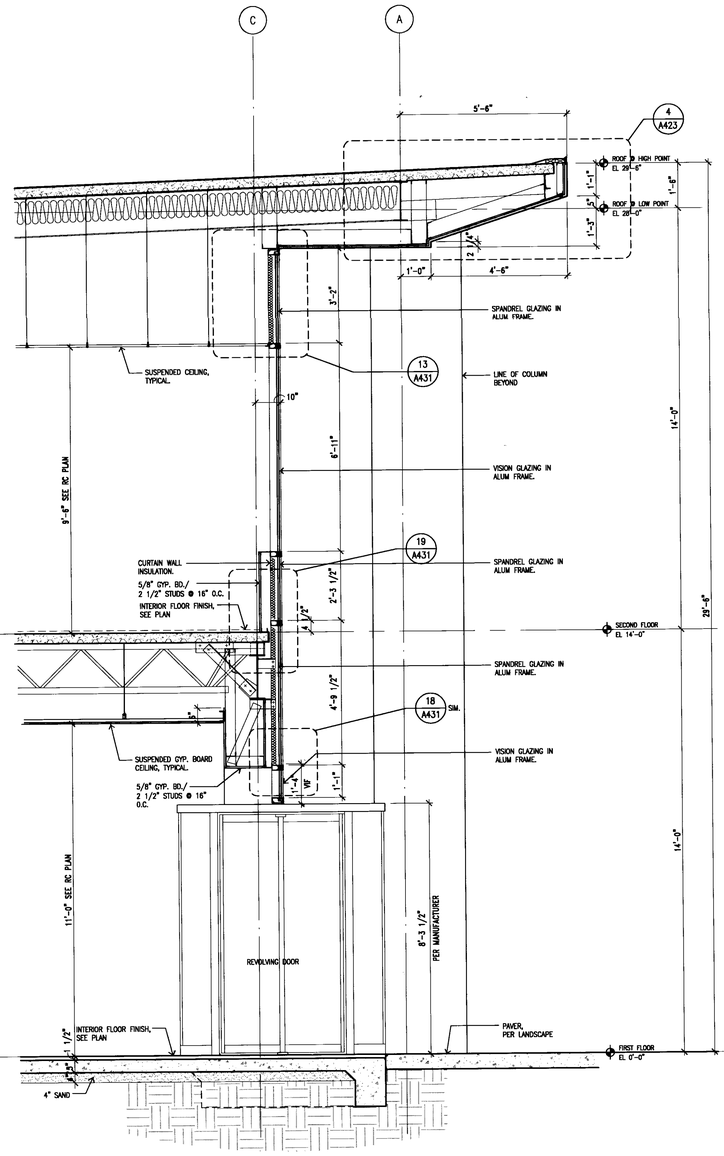

WALL SECTION 2

A320 1/2"=1'-0"

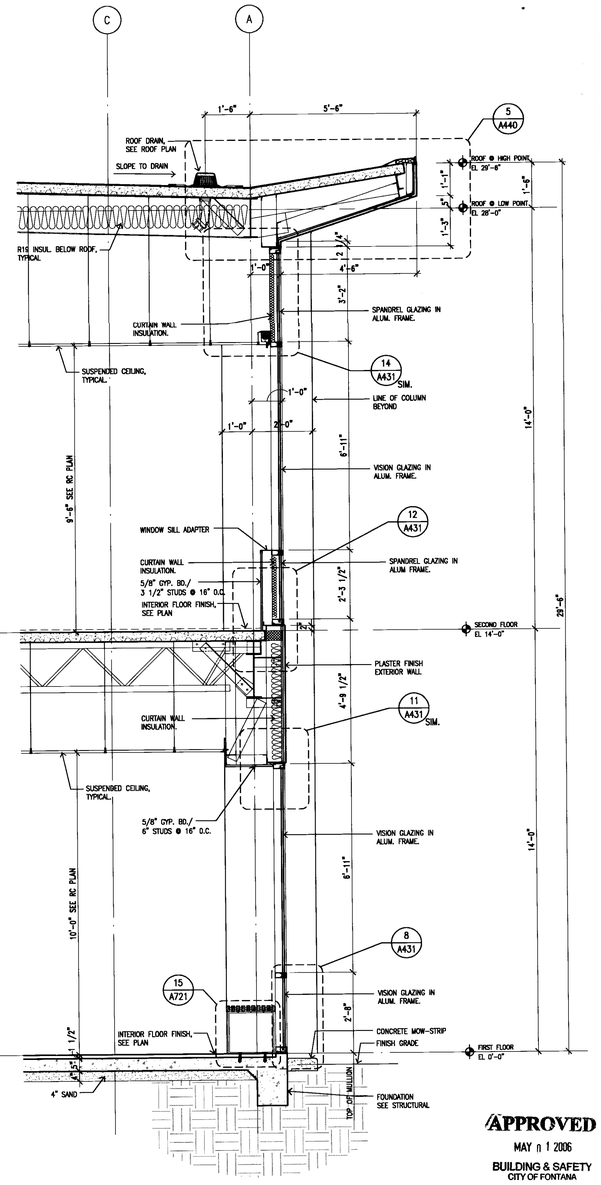

WALL SECTION 1

A320 1/2"=1'-0"

APPROVED
MAY 11 2006
BUILDING & SAFETY
CITY OF FONTANA

APPROVED
REVIEWED BY _____ DATE

Approved of these plans shall not be construed to be a permit for, or an approval of, any violation of any of the provisions of the state or local building codes or laws or of any other ordinance or law.

LANGDON WILSON
ARCHITECTURE
PLANNING
INTERIORS

18800 VON KARMAN AVENUE, SUITE 200
IRVINE, CALIFORNIA 92612-1517
949 - 833 - 9193

STRUCTURAL
KPFF 949 - 252 - 1022
MECHANICAL
TKSC 949 - 756 - 0565
ELECTRICAL
GLP 714 - 751 - 1851
LANDSCAPE
FRANK RADMACHER 714 - 832 - 1274
CIVIL ENGINEER
IKE CONSULTING 714 - 241 - 0606
AUDIO / VISUAL
VENEKLASEN ASSOCIATES 310 - 450 - 1733
DATA TELEPHONE
PLANNET CONSULTING 714 - 982 - 5800

CITY OF FONTANA

DEVELOPMENT SERVICES ORGANIZATION BUILDING

8353 SIERRA AVENUE FONTANA, CALIFORNIA

REV.	DATE	ISSUED FOR	REV.	DATE	ISSUED FOR
	10-17-05	DD PACKAGE			
	12-05-05	PLAN CHECK			
	02-06-06	PC RESUBMIT.			
	04-17-06	PERMIT SET			
	04-17-06	BID SET			

Stamp

LICENSED ARCHITECT JOHN PATRICK KILLEEN NO. C7181 EXPIRES 03-31-08 STATE OF CALIFORNIA

DATE: 11/01/05 SCALE: AS NOTED
DRAWN BY: SCT
JOB NO. L454-000 CADD TITLE: A422

SHEET TITLE:
WALL SECTIONS

SHEET NUMBER:
A422

©Copyright 2005 Langdon Wilson

PERMIT SET / BID SET 04-17-06

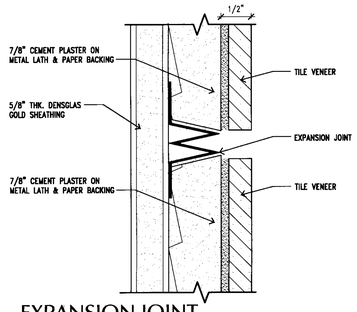

EXPANSION JOINT 6

DE\EW-34 FULL

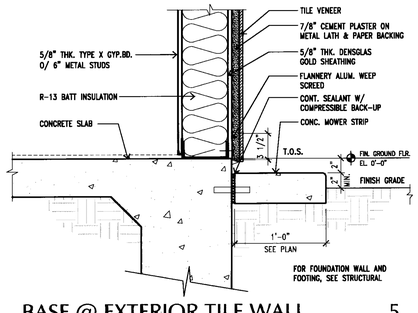

BASE @ EXTERIOR TILE WALL 5

DE\EW-33 1 1/2"=1'-0"

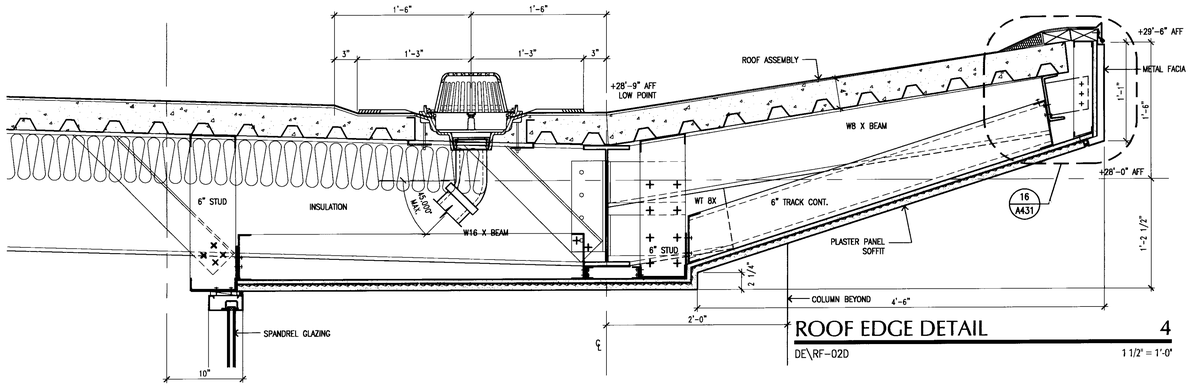

ROOF EDGE DETAIL 4

DE\RF-02D 1 1/2" = 1'-0"

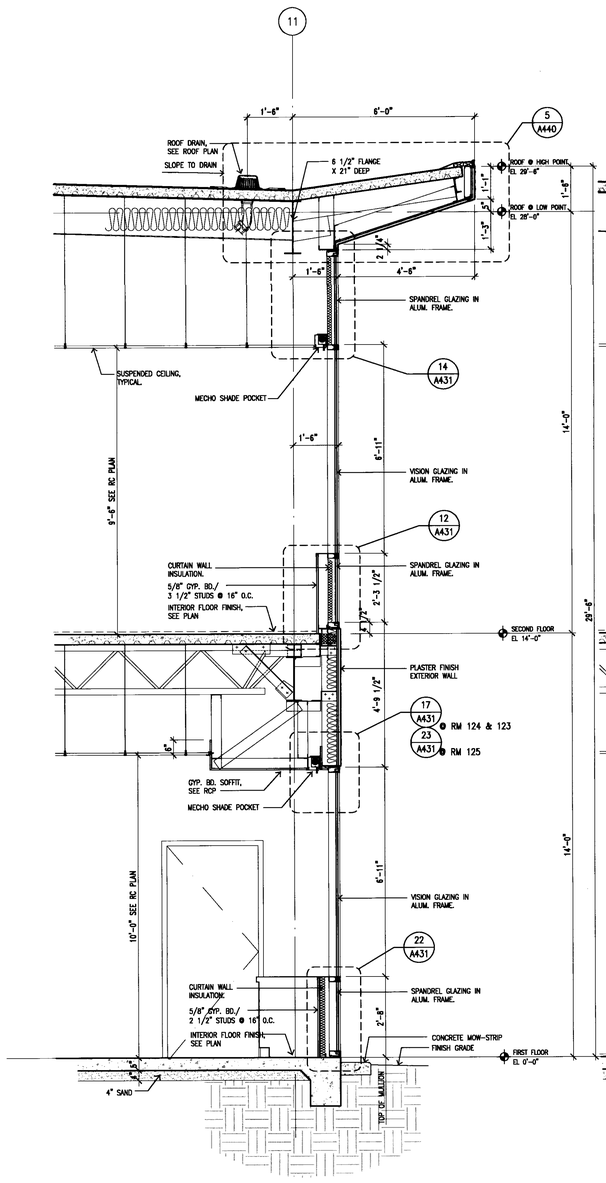

WALL SECTION 3

A320 1/2"=1'-0"

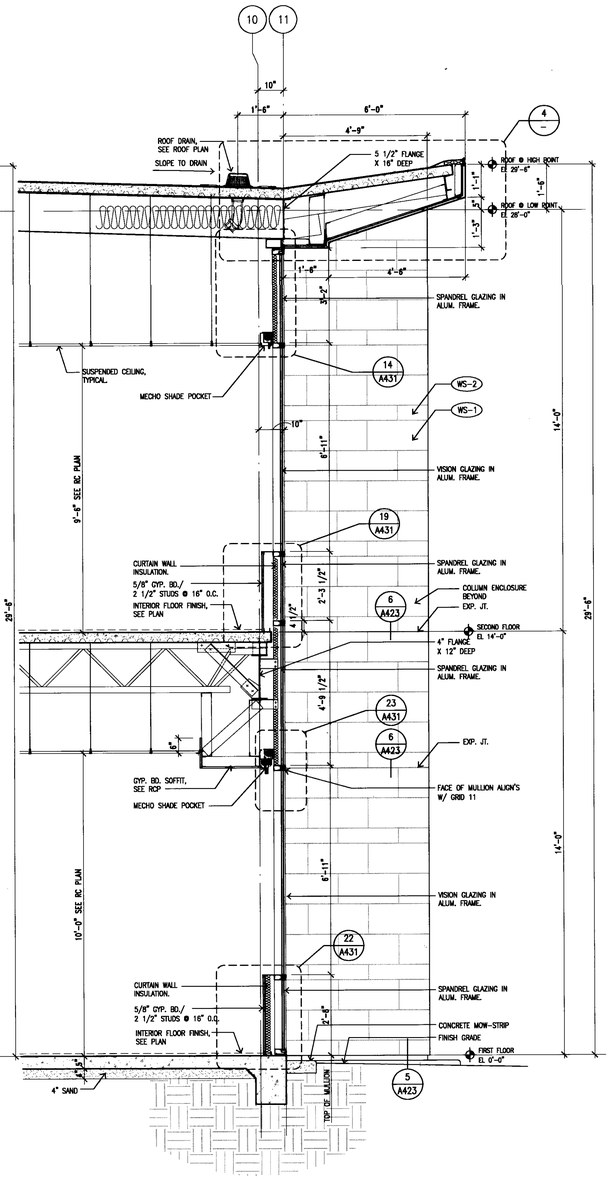

WALL SECTION 2

A320 1/2"=1'-0"

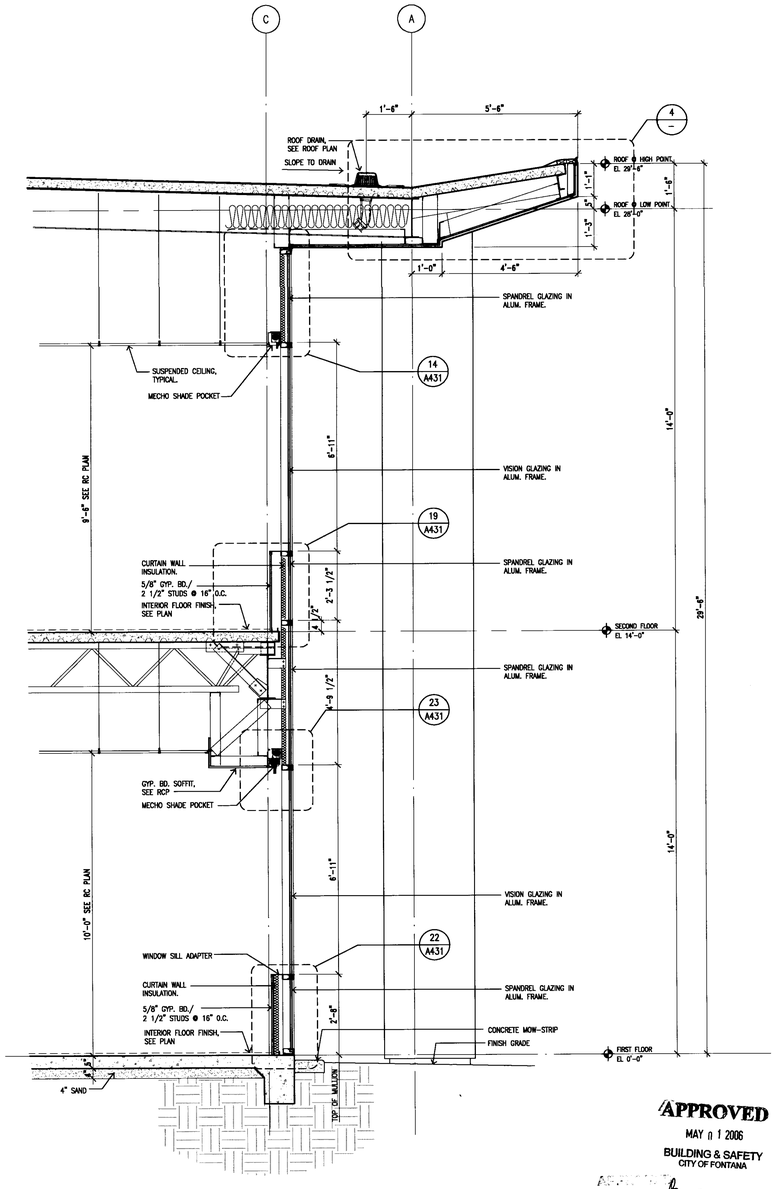

WALL SECTION 1

A320 1/2"=1'-0"

APPROVED
MAY 01 2006
BUILDING & SAFETY
CITY OF FONTANA

REVIEWED BY

Approved of these plans shall not be construed to be a permit for or approval of any violation of any of the provisions of the [illegible] laws. One set of approved plans shall be kept on the job until completion.
WILLDAN

LANGDON WILSON
ARCHITECTURE
PLANNING
INTERIORS

18800 VON KARMAN AVENUE, SUITE 200
IRVINE, CALIFORNIA 92612-1517
949 - 833 - 9193

STRUCTURAL
KPFF 949 - 252 - 1022
MECHANICAL
TKSC 949 - 756 - 0565
ELECTRICAL
GLP 714 - 751 - 1851
LANDSCAPE
FRANK RADMACHER 714 - 832 - 1774
CIVIL ENGINEER
IKE CONSULTING 714 - 241 - 0606
AUDIO / VISUAL
VENEKLASEN ASSOCIATES 310 - 450 - 1733
DATA TELEPHONE
PLANNET CONSULTING 714 - 982 - 5800

CITY OF FONTANA
DEVELOPMENT SERVICES ORGANIZATION BUILDING

8353 SIERRA AVENUE FONTANA, CALIFORNIA

REV.	DATE	ISSUED FOR	REV.	DATE	ISSUED FOR
	10-17-05	DD PACKAGE			
	12-05-05	PLAN CHECK			
	02-06-06	PC RESUBMIT.			
	04-17-06	PERMIT SET			
	04-17-06	BID SET			

Stamp

LICENSED ARCHITECT PATRICK ALEN NO. C7184 EXP. 03-31-07 STATE OF CALIFORNIA

DATE: 11/01/05 SCALE: AS NOTED
DRAWN BY: SCT
JOB NO. L454-000 CADD TITLE: A423

SHEET TITLE:
WALL SECTIONS

SHEET NUMBER:
A423

©Copyright 2005 Langdon Wilson

PERMIT SET / BID SET 04-17-06

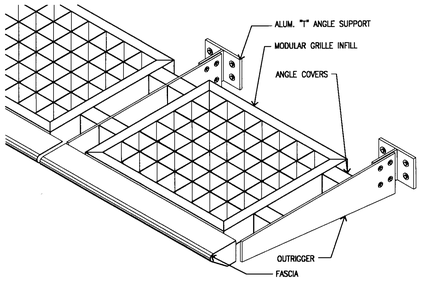

SUN SCREEN 8

DE\CANOPY-02 1"=1'-0"

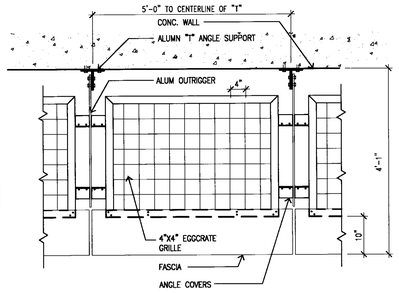

SUN SCREEN PLAN 7

DE\CANOPY-03 3/4"=1'-0"

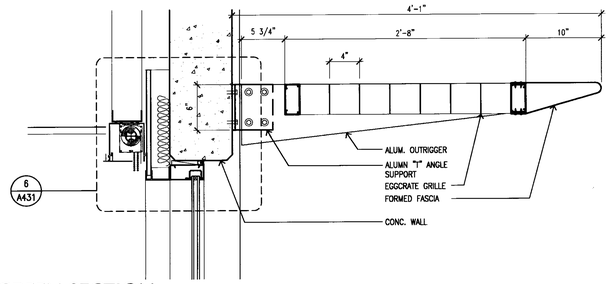

SUN SCREEN SECTION 6

DE\CANOPY-01 1 1/2"=1'-0"

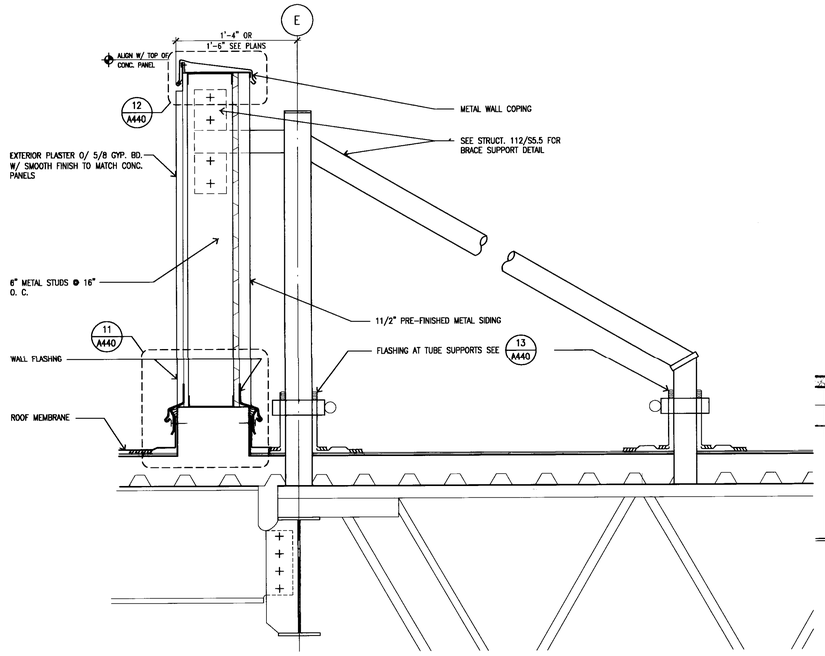

MECH. WALL ENCLOSURE 5

DE\RF-23 1 1/2"=1'-0"

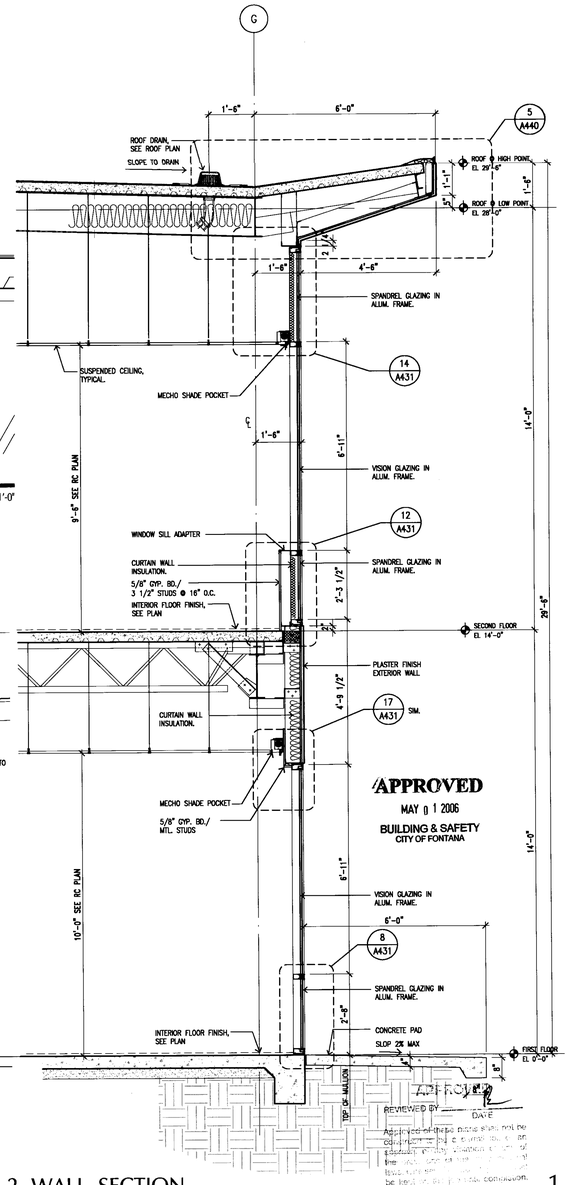

APPROVED
MAY 01 2006
BUILDING & SAFETY
CITY OF FONTANA

REVIEWED BY _____ DATE _____

Approval of these plans shall not be construed to be a permit for, or an approval of any violation of any ordinance or law. Any permit issued based on these plans shall be void if any violation of any ordinance or law is found to be in effect.

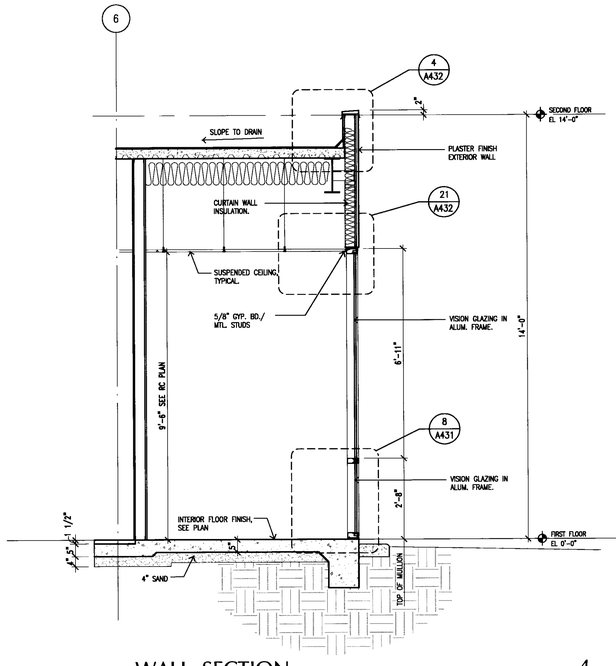

WALL SECTION 4

A320 1/2"=1'-0"

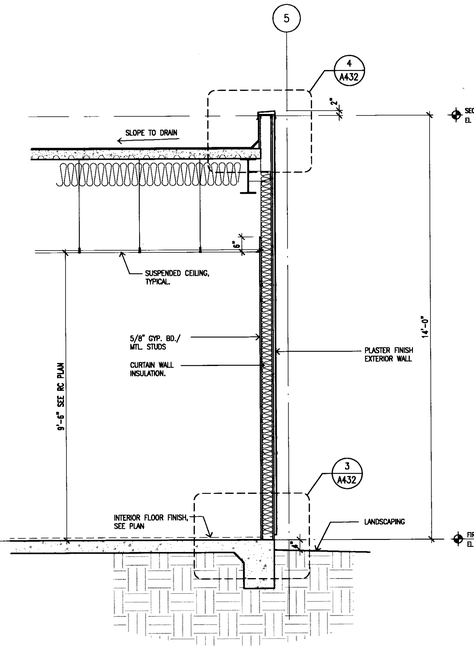

WALL SECTION 3

A320 1/2"=1'-0"

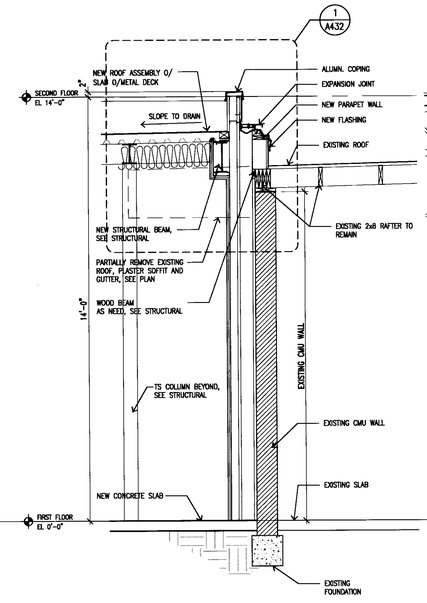

WALL SECTION 2

A320 1/2"=1'-0"

WALL SECTION 1

A320 1/2"=1'-0"

LANGDON WILSON
ARCHITECTURE
PLANNING
INTERIORS

18800 VON KARMAN AVENUE, SUITE 200
IRVINE, CALIFORNIA 92612-1517
949 - 833 - 9193

STRUCTURAL
KPFF 949 - 253 - 1022
MECHANICAL
TKSC 949 - 756 - 0565
ELECTRICAL
GLP 714 - 751 - 1851
LANDSCAPE
FRANK RADMACHER 714 - 832 - 1774
CIVIL ENGINEER
IKE CONSULTING 714 - 241 - 0606
AUDIO / VISUAL
VENEKLASEN ASSOCIATES 310 - 450 - 1733
DATA TELEPHONE
PLANNET CONSULTING 714 - 982 - 5800

CITY OF FONTANA
DEVELOPMENT SERVICES
ORGANIZATION BUILDING

8353 SIERRA AVENUE FONTANA, CALIFORNIA

CITY OF FONTANA CALIFORNIA

REV.	DATE	ISSUED FOR	REV.	DATE	ISSUED FOR
	10-17-05	DD PACKAGE			
	12-05-05	PLAN CHECK			
	02-06-06	PC RESUBMIT.			
	04-17-06	PERMIT SET			
	04-17-06	BID SET			

Stamp

LICENSED ARCHITECT JON PATRICK ALFERY NO. C7187 REN. 03-31-07 STATE OF CALIFORNIA

DATE: 11/01/05 SCALE: AS NOTED
DRAWN BY: SCT
JOB NO. L454-000 CADD TITLE A424

SHEET TITLE:
WALL SECTIONS

SHEET NUMBER:
A424

©Copyright 2005 Langdon Wilson

PERMIT SET / BID SET 04-17-06

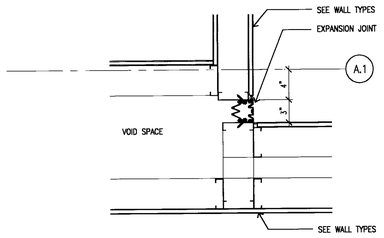

EXPANSION JOINT 25
EXP-08 1 1/2"=1'-0"

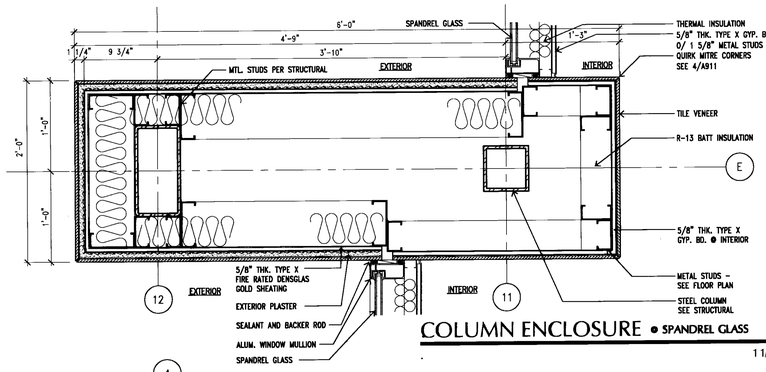

COLUMN ENCLOSURE • SPANDREL GLASS 15
1 1/2"=1'-0"

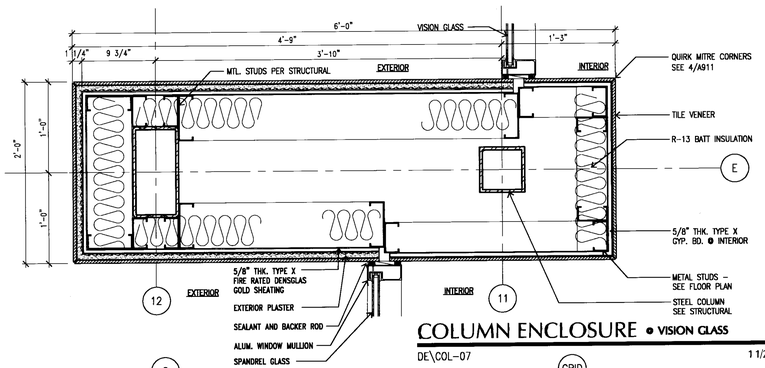

COLUMN ENCLOSURE • VISION GLASS 5
DE\COL-07 1 1/2"=1'-0"

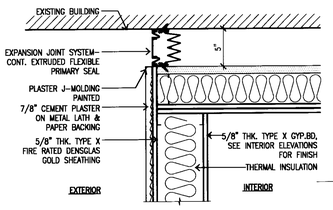

EXPANSION JOINT 24
DE\EXP-02 1 1/2"=1'-0"

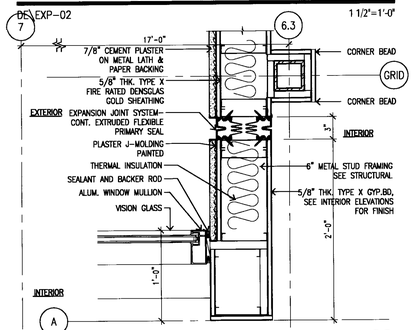

EXPANSION JOINT 23
DE\EXP-01 1 1/2"=1'-0"

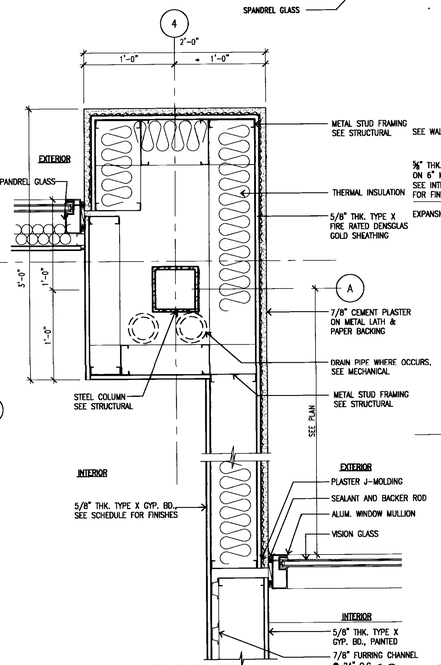

COLUMN ENCLOSURE • VISION GLASS / SPANDREL GLASS 18
DE\COL-06A 1 1/2"=1'-0"

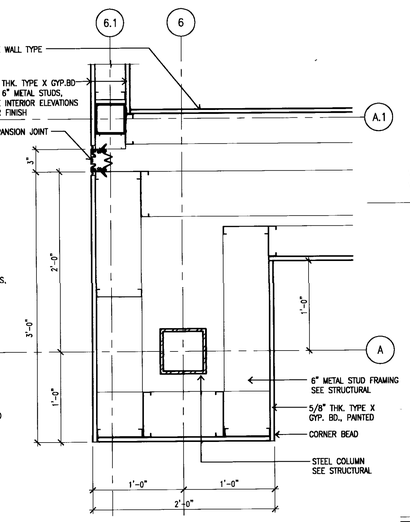

COLUMN ENCLOSURE • DRINKING FOUNTAIN 13
DE\COL-05 1 1/2"=1'-0"

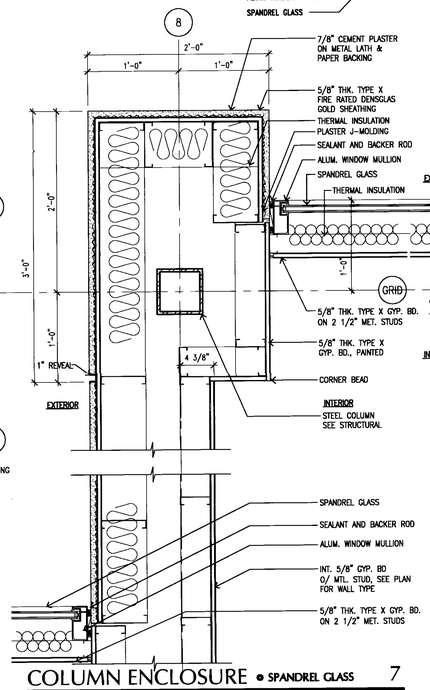

COLUMN ENCLOSURE • SPANDREL GLASS 7
DE\COL-02A 1 1/2"=1'-0"

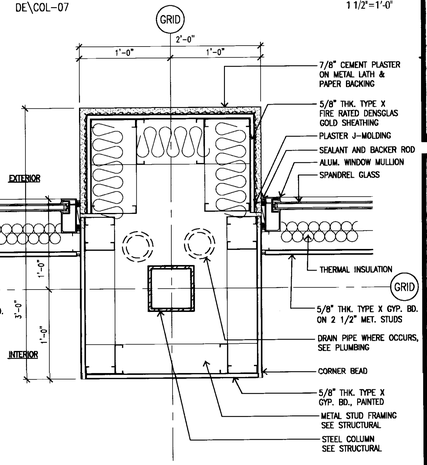

COLUMN ENCLOSURE • SPANDREL GLASS 3
1 1/2"=1'-0"

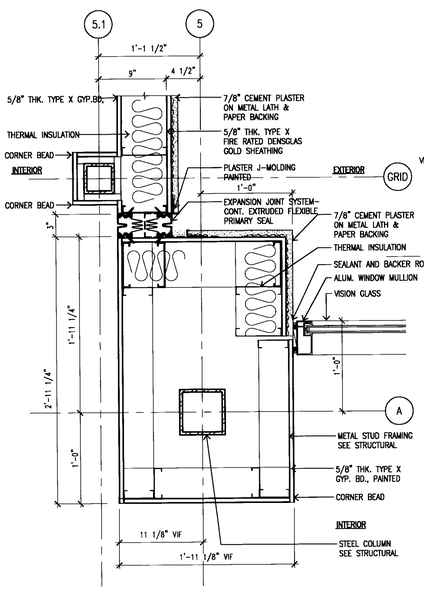

COLUMN ENCLOSURE • VISION GLASS 21
DE\COL-04 1 1/2"=1'-0"

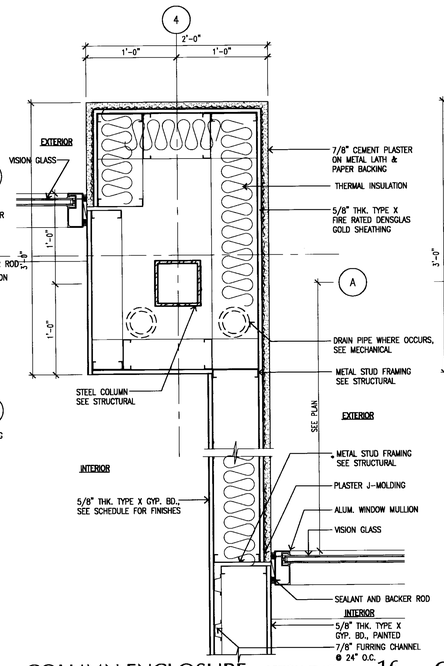

COLUMN ENCLOSURE • VISION GLASS 16
DE\COL-06 1 1/2"=1'-0"

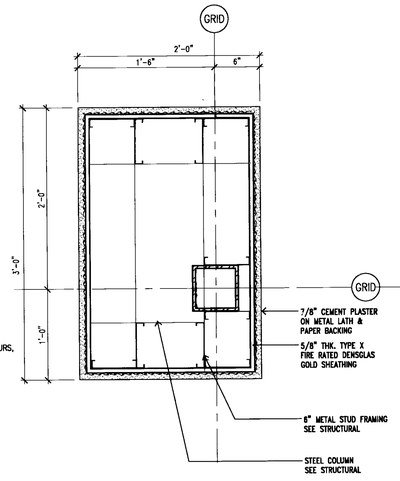

COLUMN ENCLOSURE 11
DE\COL-03 1 1/2"=1'-0"

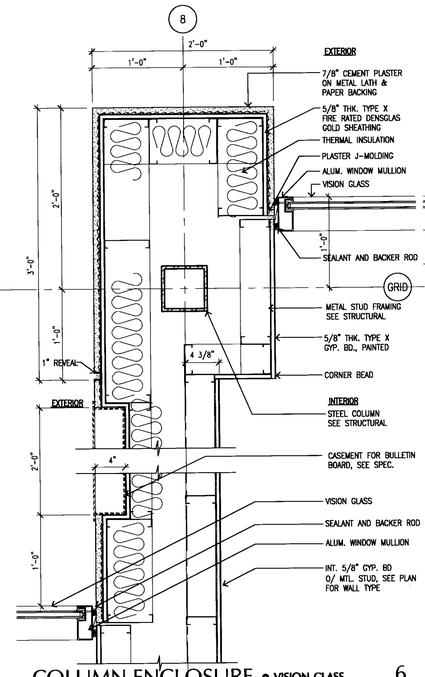

COLUMN ENCLOSURE • VISION GLASS 6
DE\COL-02 1 1/2"=1'-0"

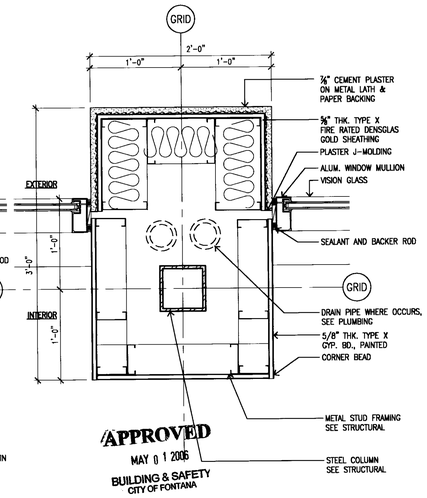

APPROVED
MAY 01 2006
BUILDING & SAFETY
CITY OF FONTANA

APPROVED
BY METRO FIRE PROTECTION DISTRICT

Approval of these notes shall not be construed to be a permit for, or an approval of any violation of any of the provisions of the state or local laws. One set of approved plans must be kept on the job until completion.
WILLDAN

COLUMN ENCLOSURE • VISION GLASS 1
DE\COL-01 1 1/2"=1'-0"

LANGDON WILSON
ARCHITECTURE
PLANNING
INTERIORS

18800 VON KARMAN AVENUE, SUITE 200
IRVINE, CALIFORNIA 92612-1517
949 - 833 - 9193

STRUCTURAL
KPFF 949 - 252 - 1022
MECHANICAL
TISC 949 - 756 - 0565
ELECTRICAL
GLP 714 - 751 - 1851
LANDSCAPE
FRANK RADMACHER 714 - 832 - 1774
CIVIL ENGINEER
IKE CONSULTING 714 - 241 - 0606
AUDIO / VISUAL
VENEKLASEN ASSOCIATES 310 - 450 - 1733
DATA TELEPHONE
PLANNET CONSULTING 714 - 982 - 5800

CITY OF FONTANA
DEVELOPMENT SERVICES
ORGANIZATION BUILDING

8353 SIERRA AVENUE FONTANA, CALIFORNIA

CITY OF FONTANA CALIFORNIA

REV.	DATE	ISSUED FOR	REV.	DATE	ISSUED FOR
	12-05-05	PLAN CHECK			
	02-06-06	PC RESUBMIT.			
	04-17-06	PERMIT SET			
	04-17-06	BID SET			

Stamp

LICENSED ARCHITECT
JON PATRICK ALTER
NO. C7187
Exp. 09.31.07
STATE OF CALIFORNIA

DATE: SCALE: AS SHOWN
DRAWN BY:
JOB NO. L454-000 CADD TITLE: A430

SHEET TITLE:
EXTERIOR WALL DETAILS

SHEET NUMBER:
A430

©Copyright 2005 Langdon Wilson

PERMIT SET / BID SET 04-17-06

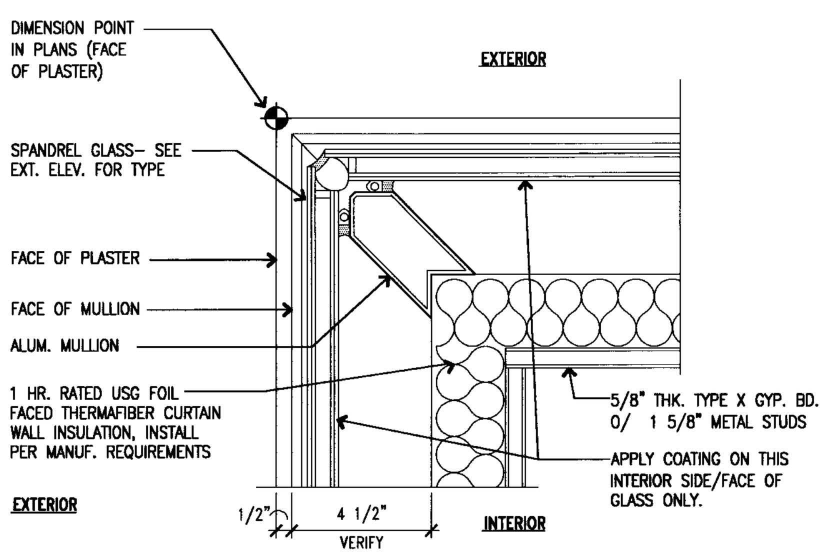

OUTSIDE CORNER • SPANDREL GLASS 25

3"=1'-0"

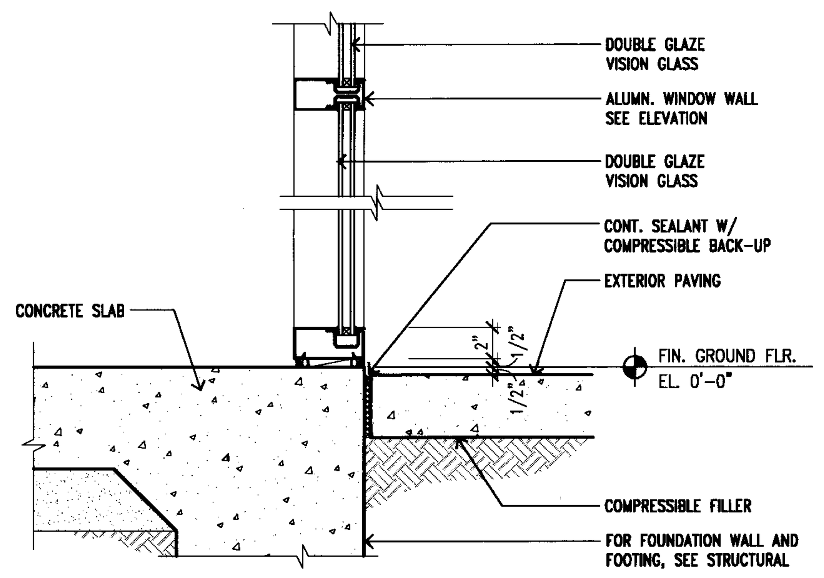

BASE @ EXTERIOR WALL 15

DE\EW-31 1 1/2"=1'-0"

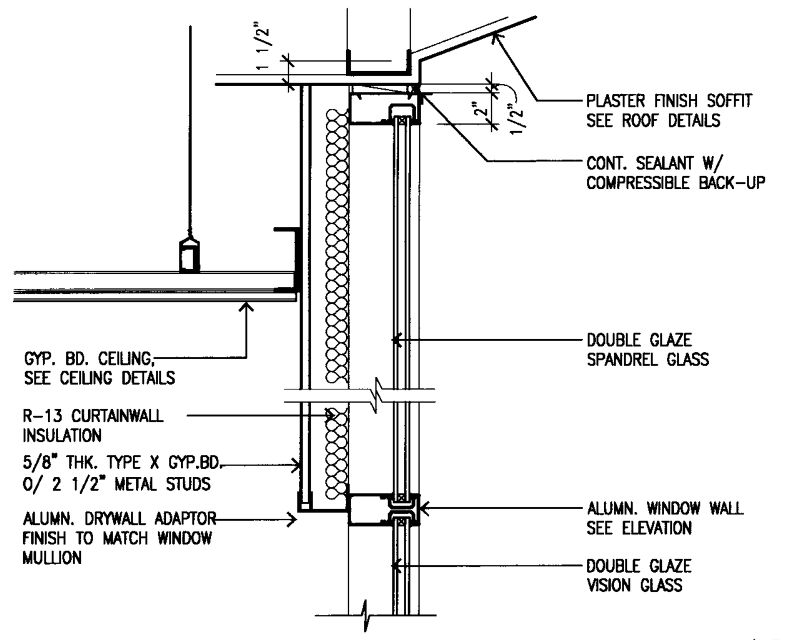

EXTERIOR WALL DETAIL 10

DE\EW-10 1 1/2"=1'-0"

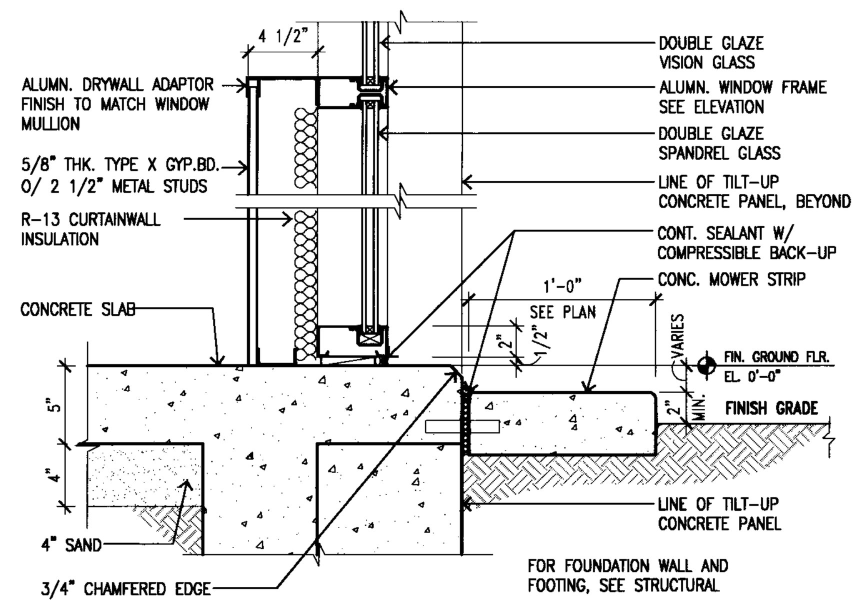

BASE @ EXTERIOR WALL 5

DE\EW-05 1 1/2"=1'-0"

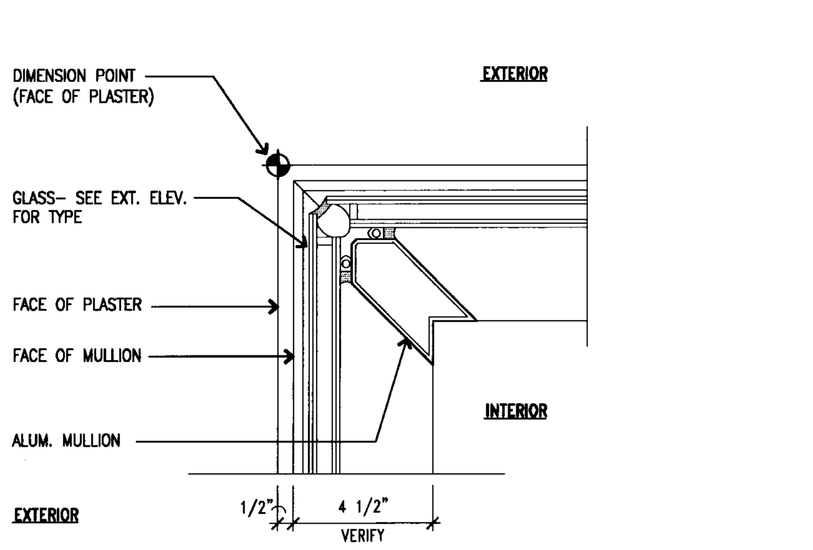

OUTSIDE CORNER • VISION GLASS 24

3"=1'-0"

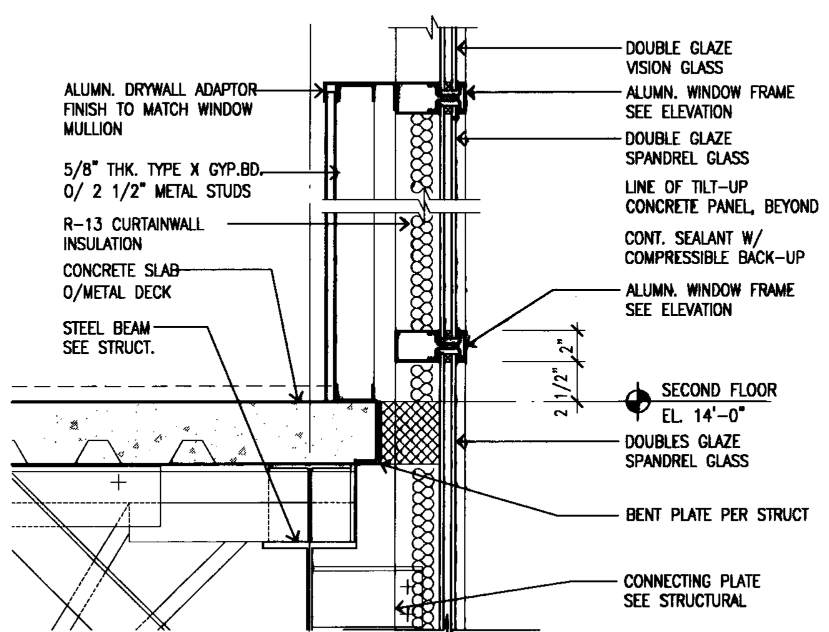

EXTERIOR WALL DETAIL 19

DE\EW-19 1 1/2"=1'-0"

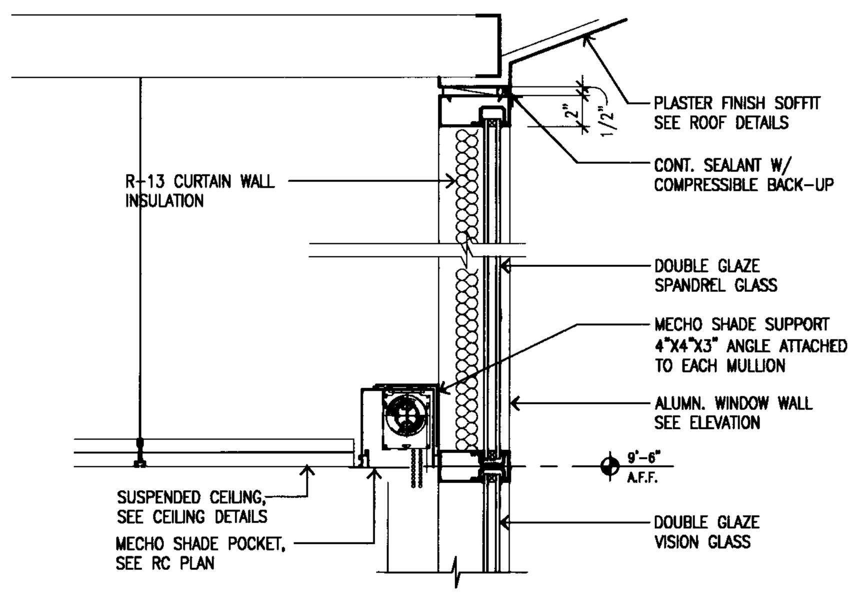

EXTERIOR WALL DETAIL 14

DE\EW-14 1 1/2"=1'-0"

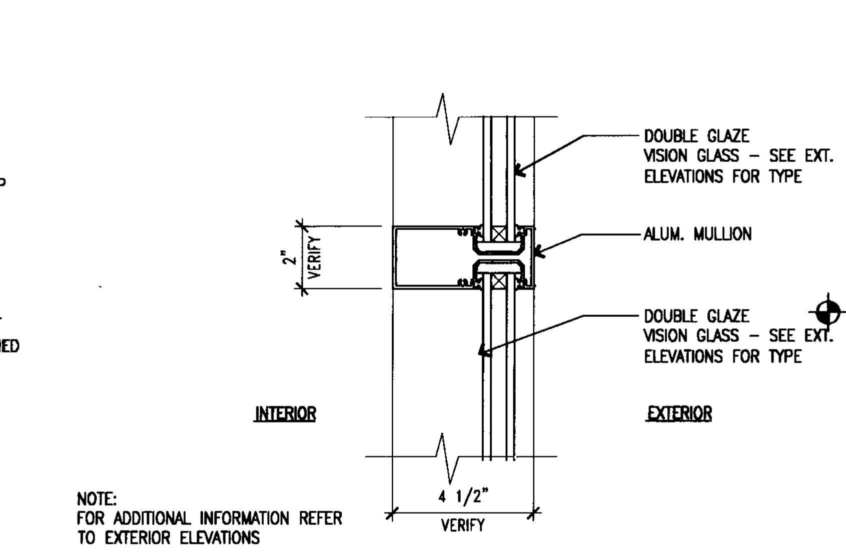

TYP. MULLION • VISION GLASS 9

DE\EW-09 3"=1'-0"

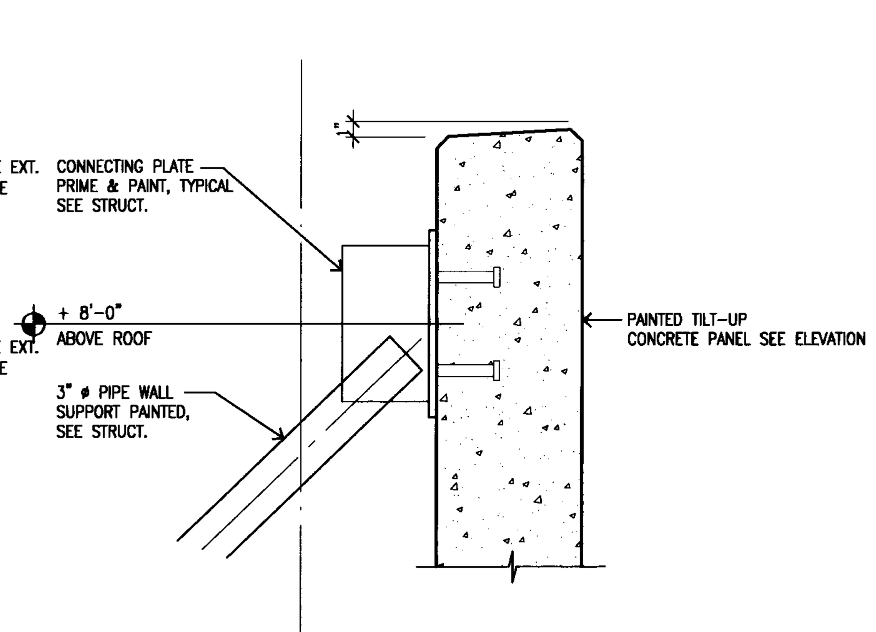

EXTERIOR WALL DETAIL 4

EW-04 1 1/2"=1'-0"

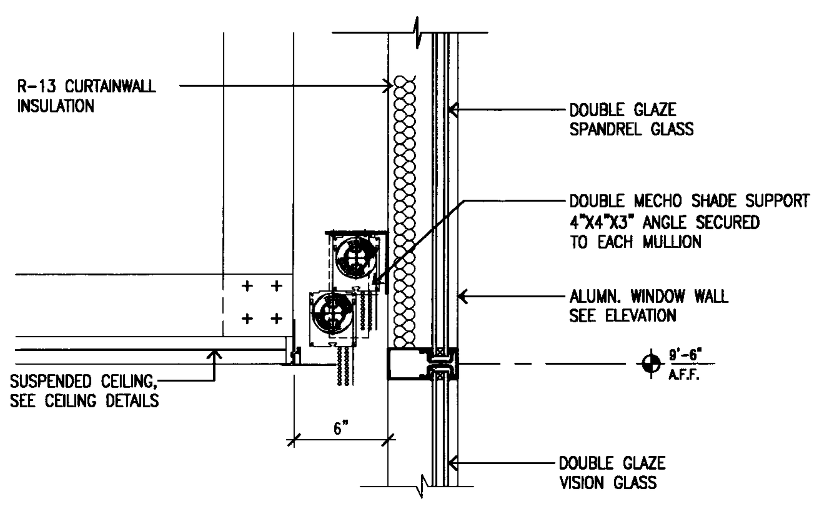

EXTERIOR WALL DETAIL 23

DE\EW-22 1 1/2"=1'-0"

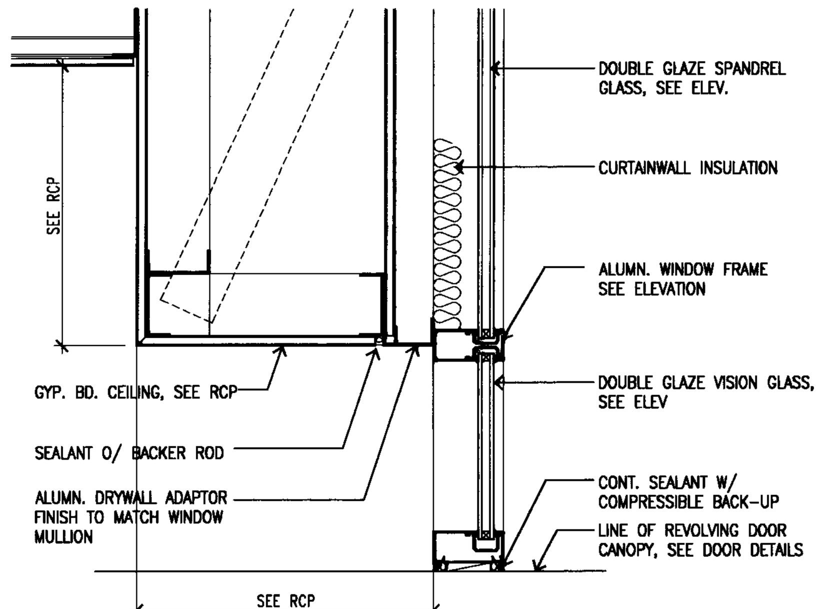

EXTERIOR WALL DETAIL 18

DE\EW-18 1 1/2"=1'-0"

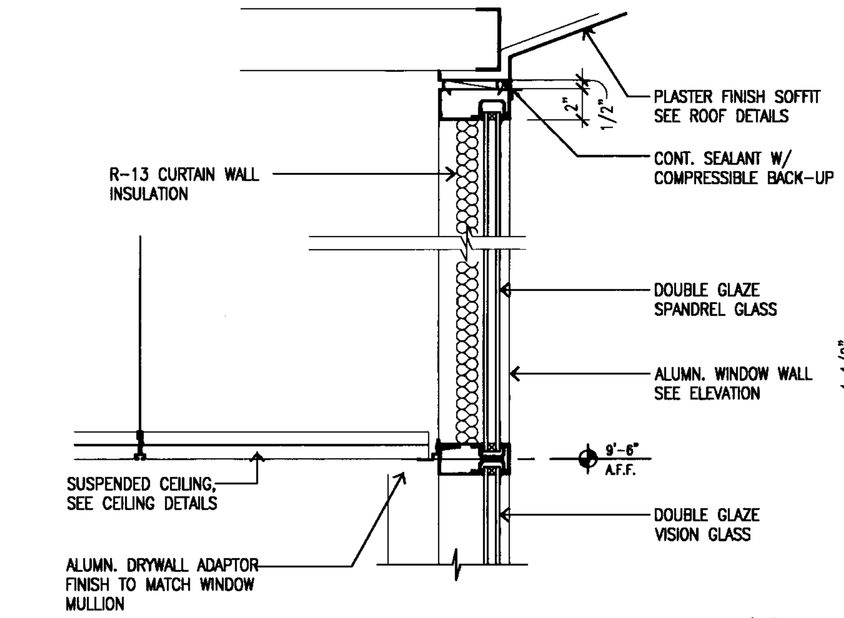

EXTERIOR WALL DETAIL 13

DE\EW-13 1 1/2"=1'-0"

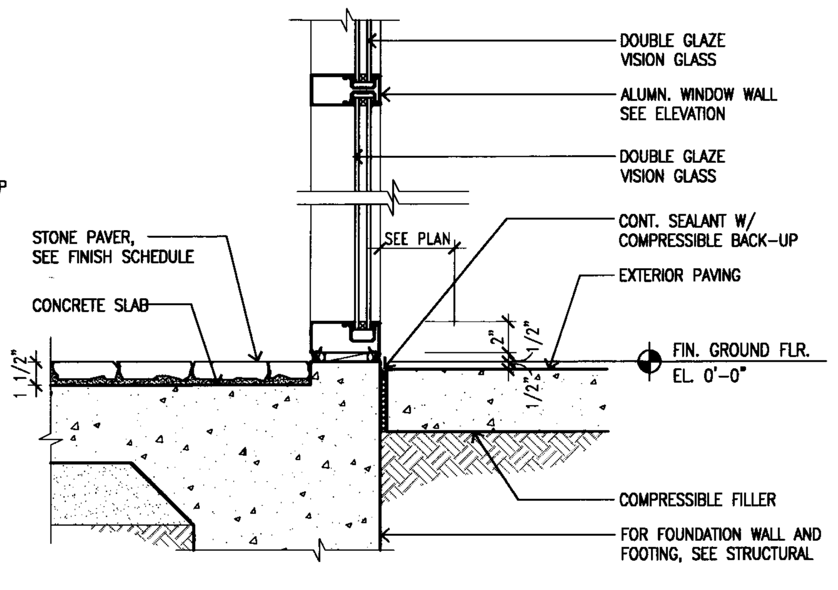

BASE @ EXTERIOR WALL 8

DE\EW-08 1 1/2"=1'-0"

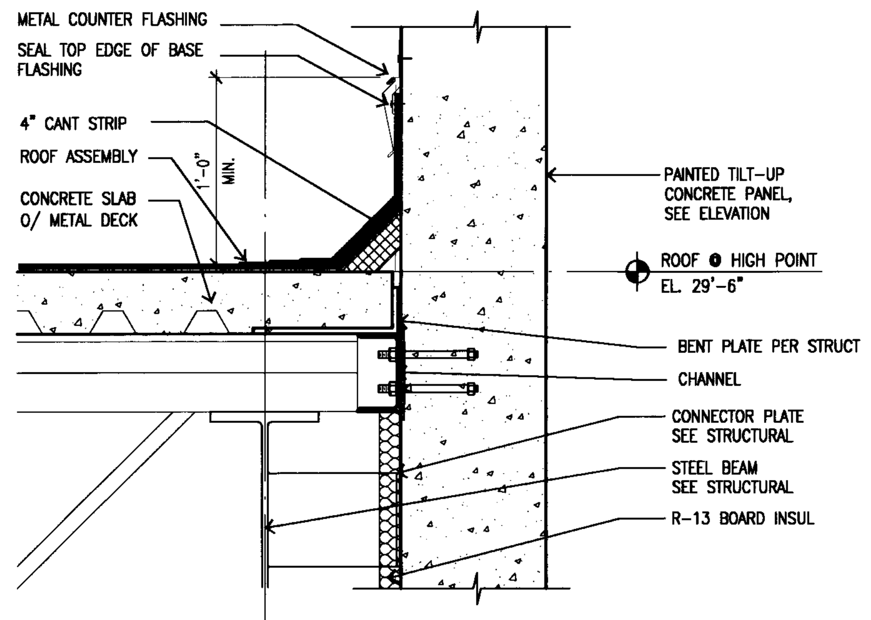

EXTERIOR WALL DETAIL 3

DE\EW-03 1 1/2"=1'-0"

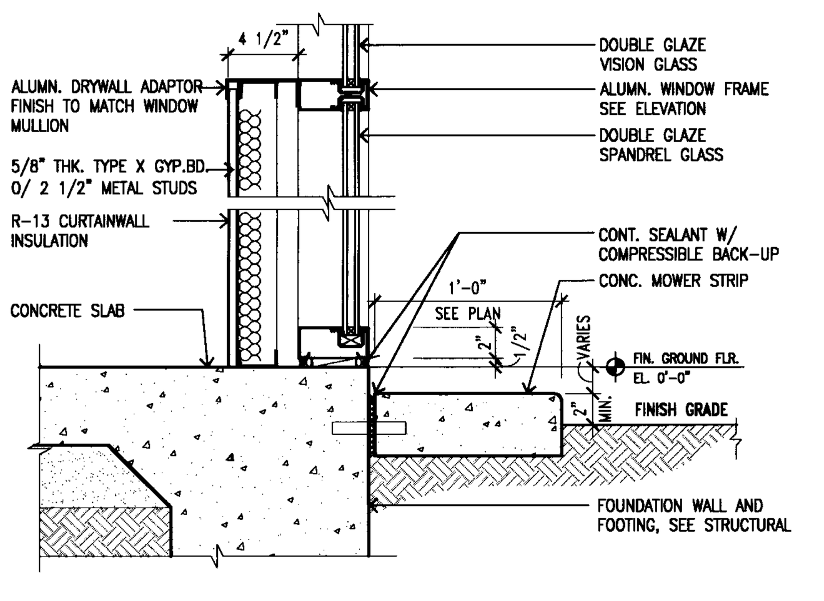

BASE @ EXTERIOR WALL 22

EW-21 1 1/2"=1'-0"

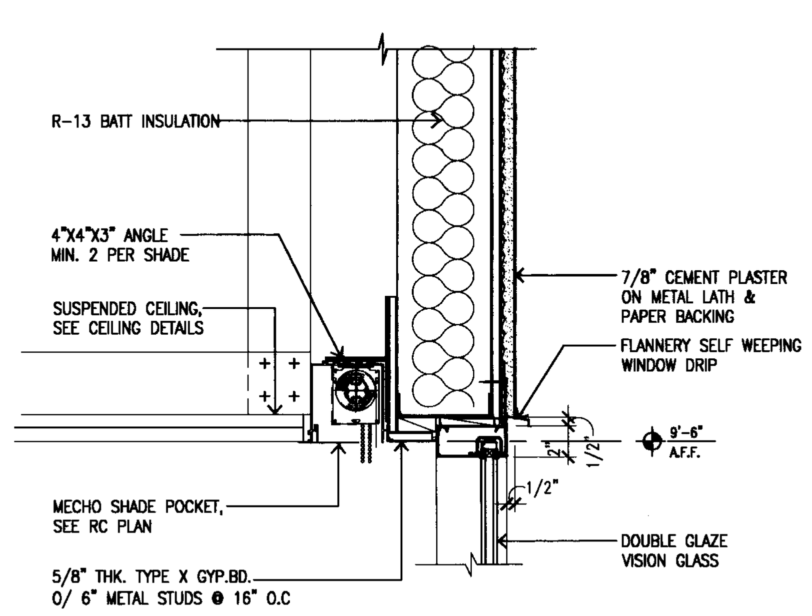

EXTERIOR WALL DETAIL 17

DE\EW-17 1 1/2"=1'-0"

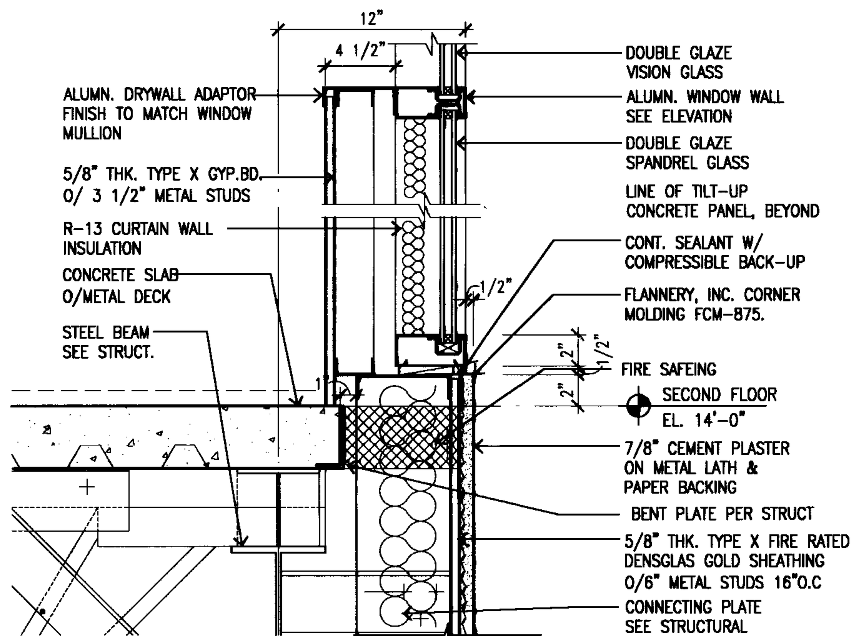

EXTERIOR WALL DETAIL 12

DE\EW-12 1 1/2"=1'-0"

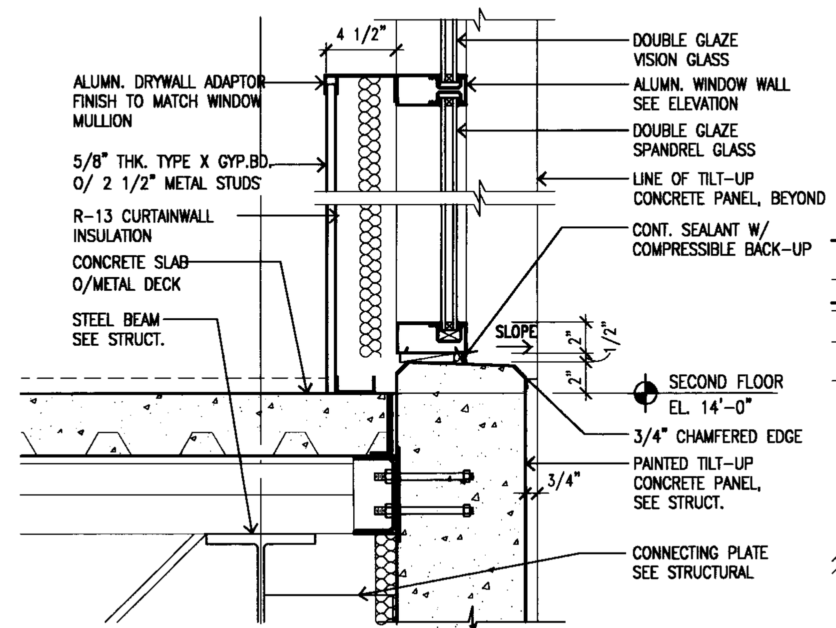

EXTERIOR WALL DETAIL 7

DE\EW-07 1 1/2"=1'-0"

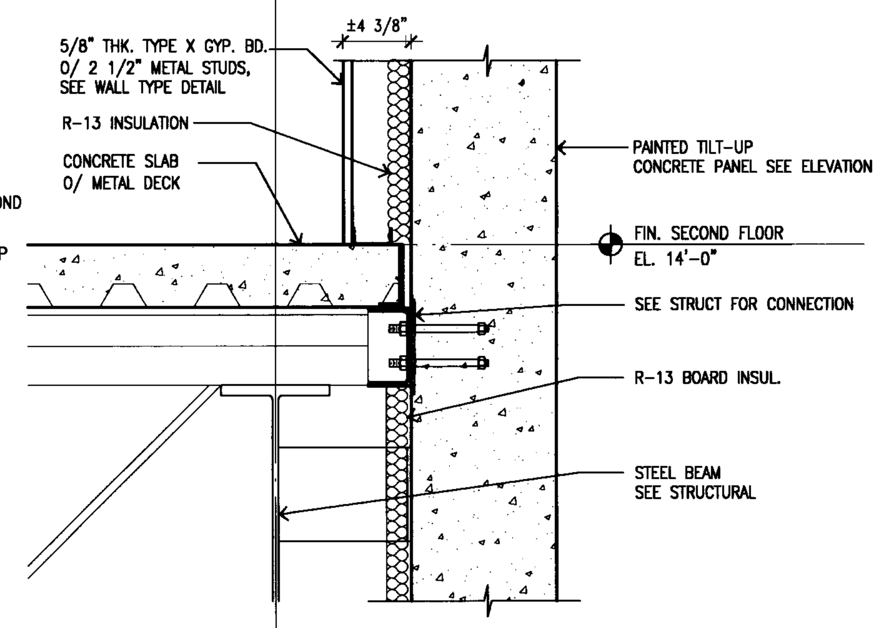

EXTERIOR WALL DETAIL 2

DE\EW-02 1 1/2"=1'-0"

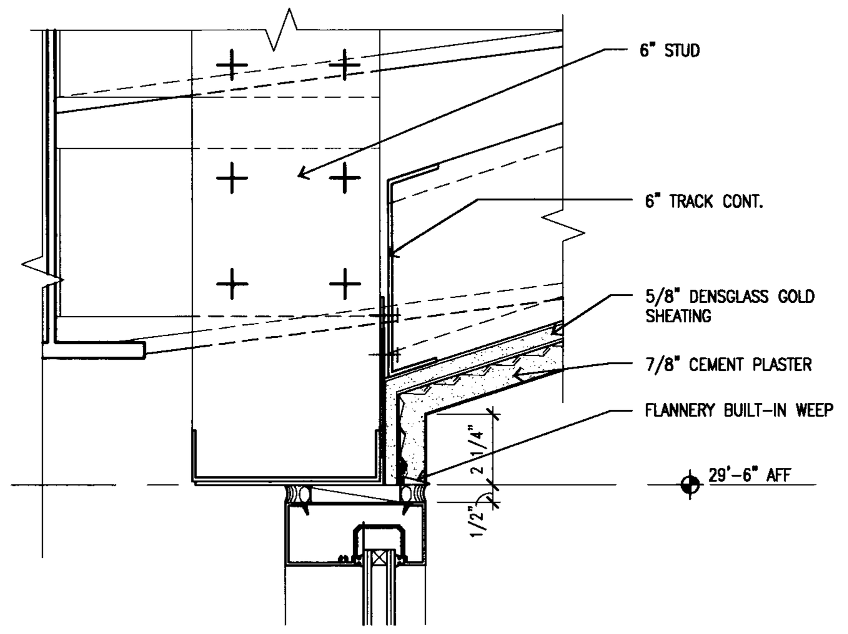

ROOF EDGE DETAIL 21

DE\RF-02F 3" = 1'-0"

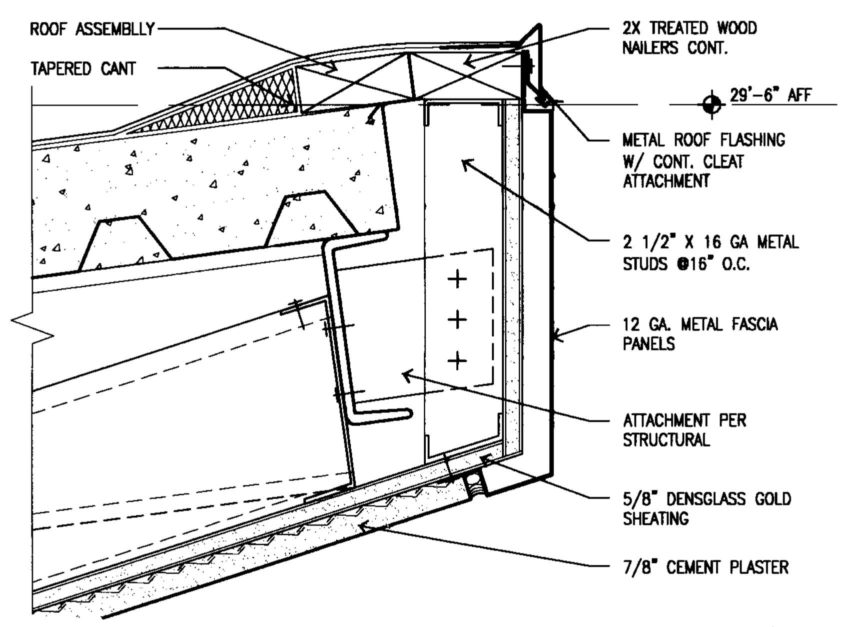

ROOF EDGE DETAIL 16

DE\RF-02E 3" = 1'-0"

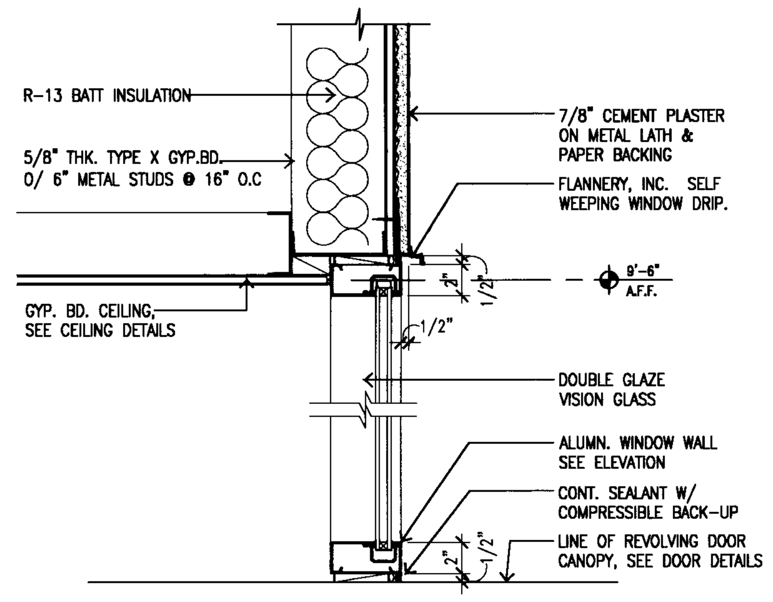

EXTERIOR WALL DETAIL 11

DE\EW-11 1 1/2"=1'-0"

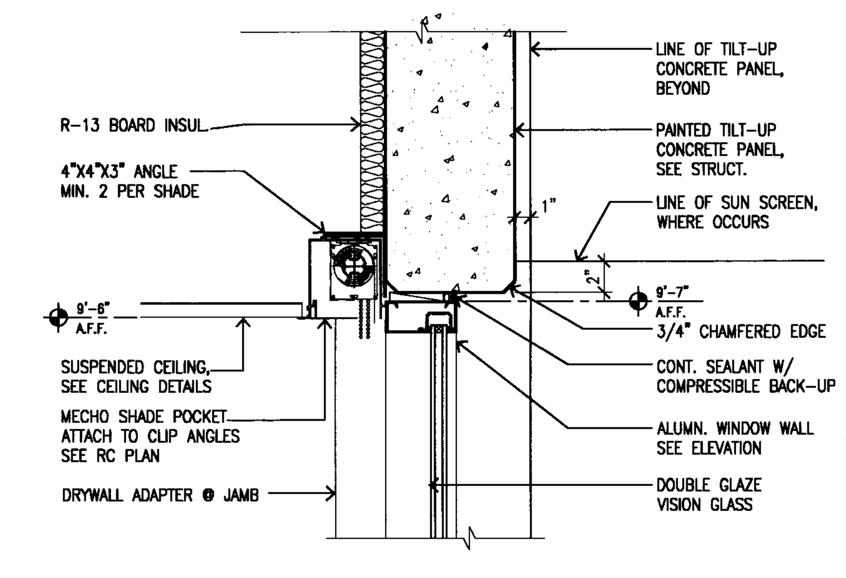

EXTERIOR WALL DETAIL 6

DE\EW-06 1 1/2"=1'-0"

APPROVED
MAY 0 1 2006
BUILDING & SAFETY
CITY OF FONTANA

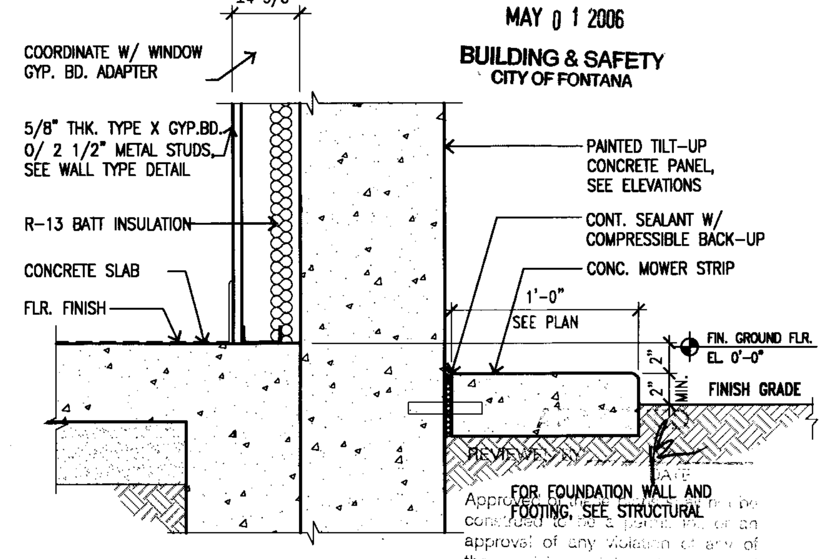

Approval of these plans shall not be construed to be a permit for, or an approval of any violation of any of the provisions of the state or local laws. One set of approved plans must be kept on the job until completion. WILLDAN

BASE @ EXTERIOR WALL 1

DE\EW-01 1 1/2"=1'-0"

LANGDON WILSON
ARCHITECTURE PLANNING INTERIORS

18800 VON KARMAN AVENUE, SUITE 200
IRVINE, CALIFORNIA 92612-1517
949 - 833 - 9193

STRUCTURAL
KPFF 949 - 252 - 1022
MECHANICAL
TKSC 949 - 756 - 0565
ELECTRICAL
GLP 714 - 751 - 1851
LANDSCAPE
FRANK RADMACHER 714 - 832 - 1774
CIVIL ENGINEER
IKE CONSULTING 714 - 241 - 0606
AUDIO / VISUAL
VENEKLASEN ASSOCIATES 310 - 450 - 1733
DATA TELEPHONE
PLANNET CONSULTING 714 - 982 - 5800

CITY OF FONTANA
DEVELOPMENT SERVICES
ORGANIZATION BUILDING
8353 SIERRA AVENUE FONTANA, CALIFORNIA

CITY OF FONTANA CALIFORNIA

REV.	DATE	ISSUED FOR	REV.	DATE	ISSUED FOR
	12-05-05	PLAN CHECK			
	02-06-06	PC RESUBMIT.			
	04-17-06	PERMIT SET			
	04-17-06	BID SET			

Stamp

LICENSED ARCHITECT JON PATRICK ALLEN NO. C7181 REN. 03-31-07 STATE OF CALIFORNIA

DATE: SCALE: AS SHOWN
DRAWN BY:
JOB NO. L454-000 CADD TITLE: A431
SHEET TITLE:
EXTERIOR WALL DETAIL
SHEET NUMBER:
A431

©Copyright 2005 Langdon Wilson

PERMIT SET / BID SET 04-17-06

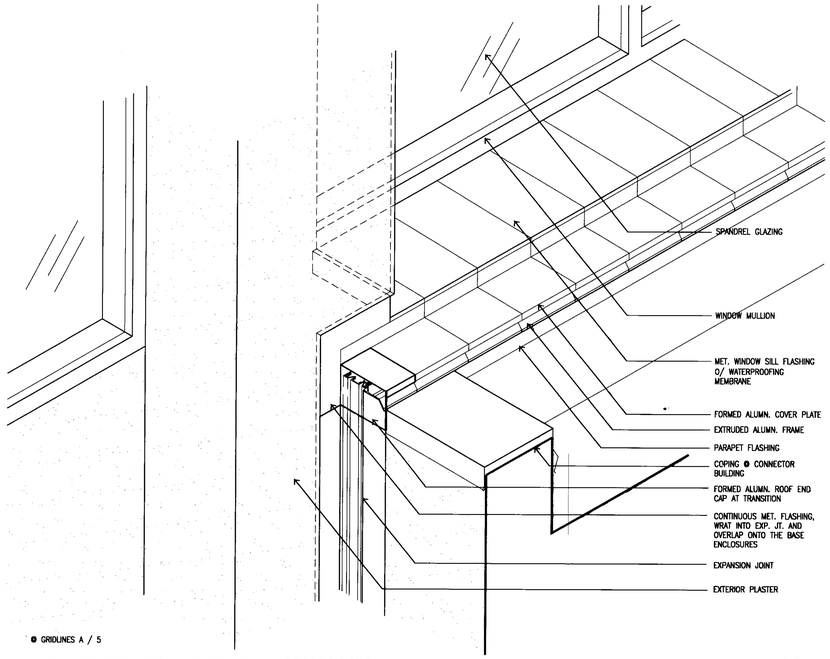

EXPANSION JOINT @ WINDOW SILL 19

DE\EXP-03 1 1/2"=1'-0"

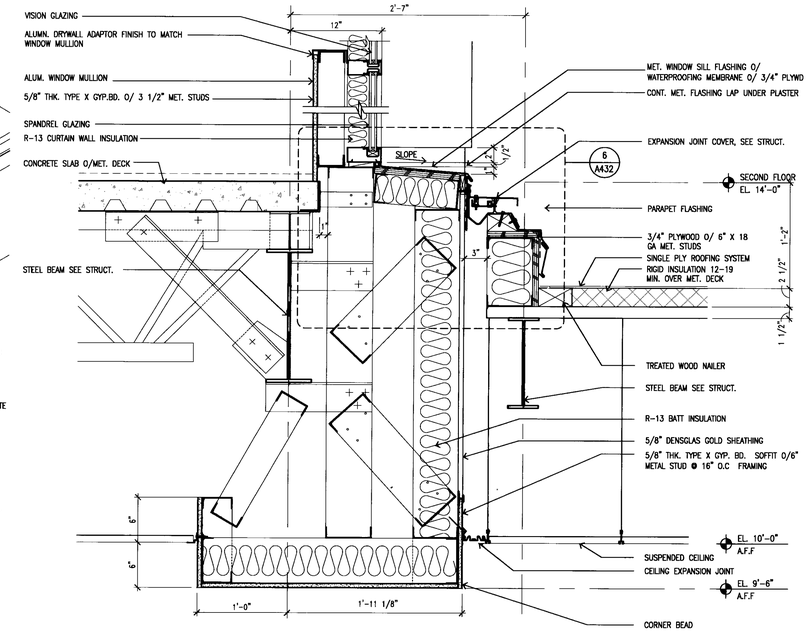

EXTERIOR WALL DETAIL 9

DE\EW-16 1 1/2"=1'-0"

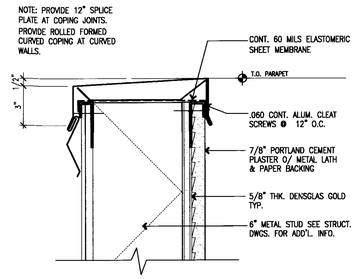

COPING DETAIL 5

DE\EW-23 3"=1'-0"

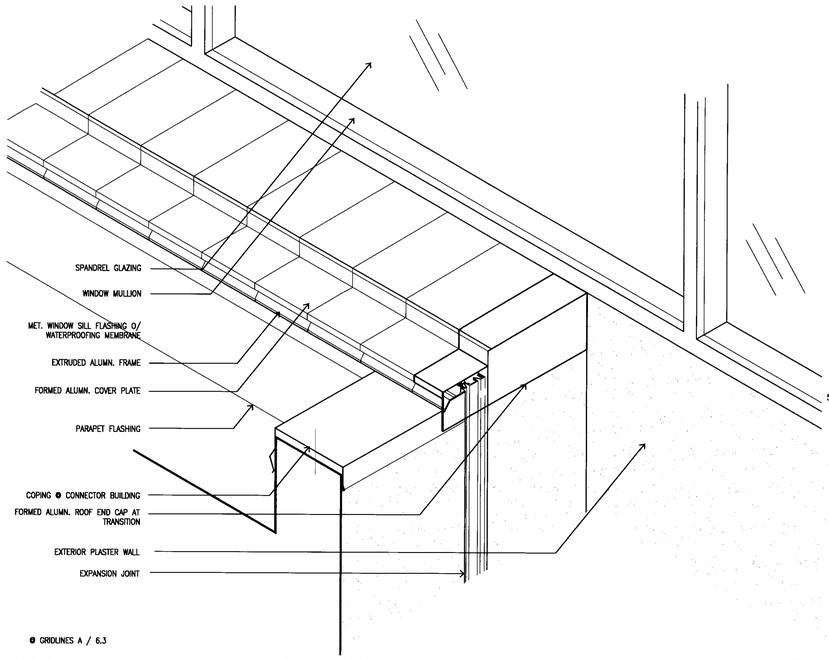

EXPANSION JOINT @ WINDOW SILL 17

DE\EXP-07 1 1/2"=1'-0"

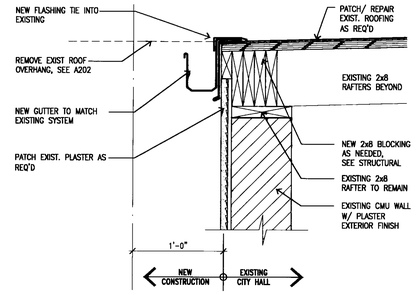

EXTERIOR WALL DETAIL 13

DE\EW-30 1 1/2"=1'-0"

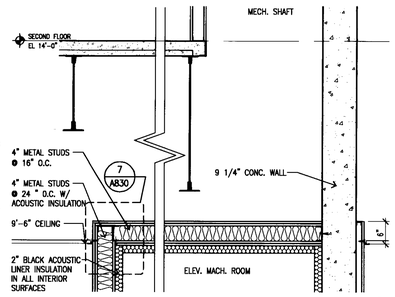

CEILING WITH SHAFT 8

DE\DR-06 3/4" = 1'-0"

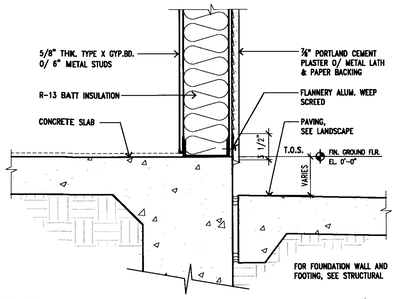

BASE @ EXTERIOR WALL 3

DE\EW-29 1 1/2"=1'-0"

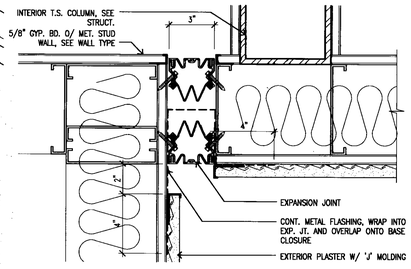

EXPANSION JOINT DET 12

DE\EXP-04 3"=1'-0"

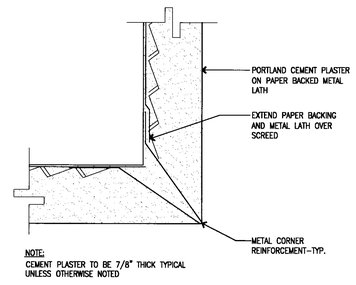

METAL DRIP SCREED 7

FULL SIZE

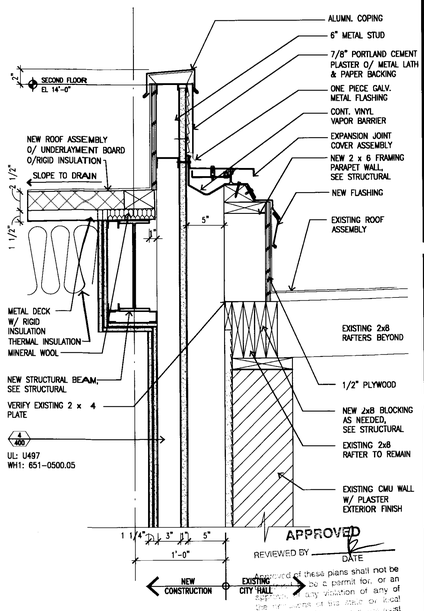

EXTERIOR WALL DETAIL 4

DE\EW-28 1 1/2"=1'-0"

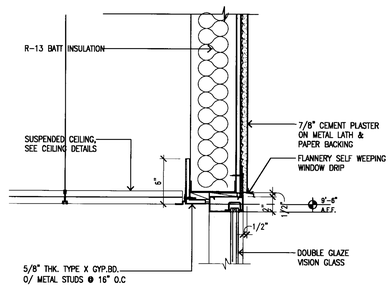

EXTERIOR WALL DETAIL 21

DE\EW-32 1 1/2"=1'-0"

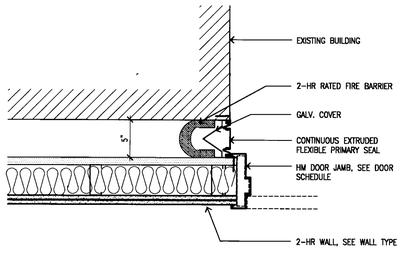

EXPANSION JOINT 16

EXP-09 1 1/2"=1'-0"

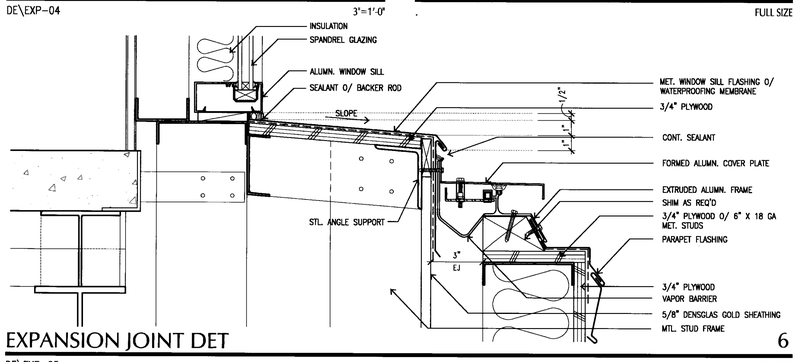

EXPANSION JOINT DET 6

DE\EXP-05 3"=1'-0"

LANGDON WILSON
ARCHITECTURE
PLANNING
INTERIORS

18800 VON KARMAN AVENUE, SUITE 200
IRVINE, CALIFORNIA 92612-1537
949 - 833 - 9193

STRUCTURAL
KPFF 949 - 252 - 1022
MECHANICAL
TKSC 949 - 756 - 0565
ELECTRICAL
GLP 714 - 751 - 1851
LANDSCAPE
FRANK RADMACHER 714 - 832 - 1774
CIVIL ENGINEER
IKE CONSULTING 714 - 241 - 0606
AUDIO / VISUAL
VENEKLASEN ASSOCIATES 310 - 450 - 1733
DATA TELEPHONE
PLANNET CONSULTING 714 - 982 - 5800

CITY OF FONTANA
DEVELOPMENT SERVICES
ORGANIZATION BUILDING

8353 SIERRA AVENUE FONTANA, CALIFORNIA

REV.	DATE	ISSUED FOR	REV.	DATE	ISSUED FOR
	12-05-05	PLAN CHECK			
	02-06-06	PC RESUBMIT.			
	03-13-06	PC#2 RESUBMIT.			
	04-17-06	PERMIT SET			
	04-17-06	BID SET			

Stamp

LICENSED ARCHITECT JON PATRICK ALLEN NO. C7181 REN. 03-31-2006 STATE OF CALIFORNIA

APPROVED
MAY 01 2006
BUILDING & SAFETY
CITY OF FONTANA

DATE: SCALE: AS SHOWN
DRAWN BY:
JOB NO. L454-000 CADD TITLE: A432
SHEET TITLE:

MISC. DETAILS

SHEET NUMBER:

A432

©Copyright 2005 Langdon Wilson

APPROVED
REVIEWED BY DATE

PERMIT SET / BID SET 04-17-06

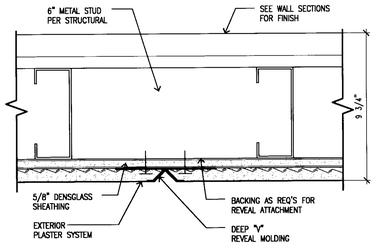

EXTERIOR PLASTER REVEAL 25

DE\RF-27 3" = 1'-0"

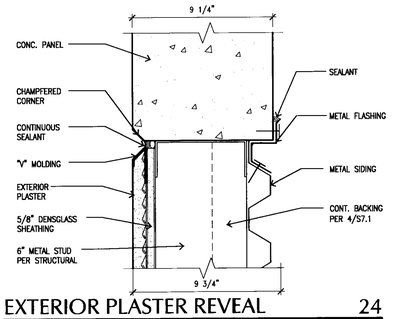

EXTERIOR PLASTER REVEAL 24

DE\RF-26 3" = 1'-0"

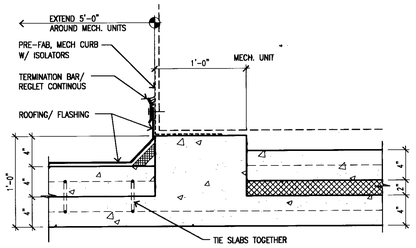

MECH. PAD DETAIL 19

DE\RF-21 1 1/2" = 1'-0"

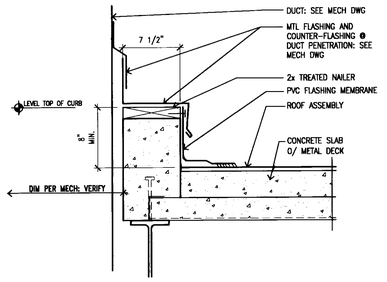

CURB @ DUCT PENETRATION 14

DE\RF-20 1 1/2" = 1'-0"

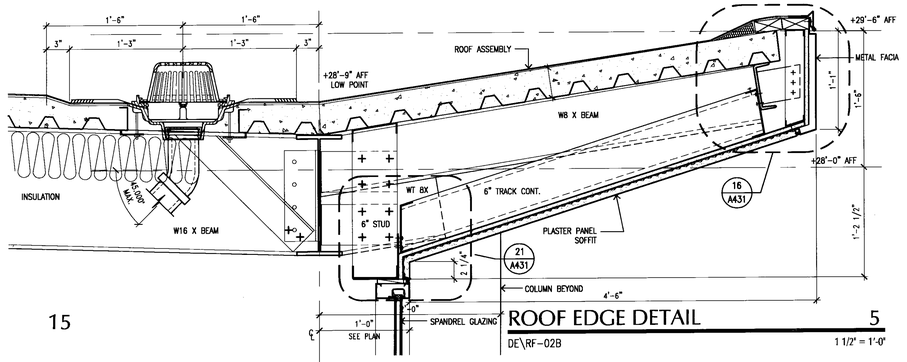

ROOF EDGE DETAIL 5

DE\RF-02B 1 1/2" = 1'-0"

15

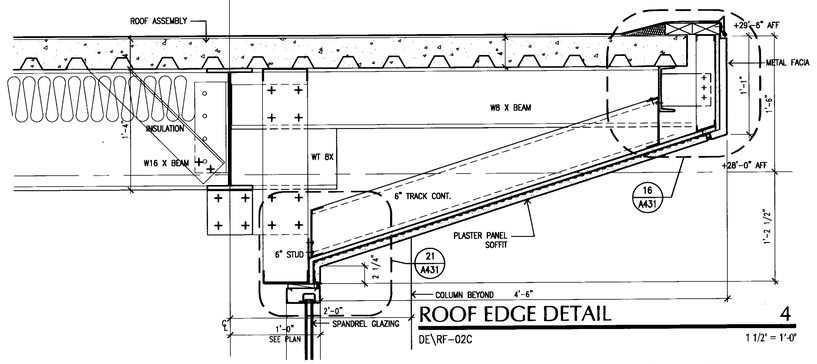

ROOF EDGE DETAIL 4

DE\RF-02C 1 1/2" = 1'-0"

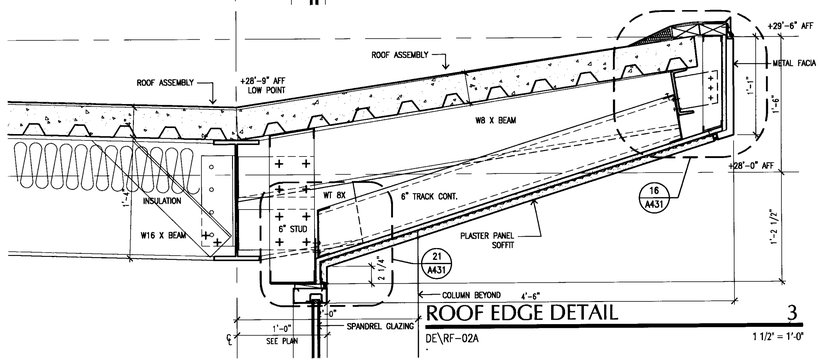

ROOF EDGE DETAIL 3

DE\RF-02A 1 1/2" = 1'-0"

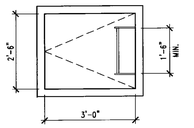

PLAN

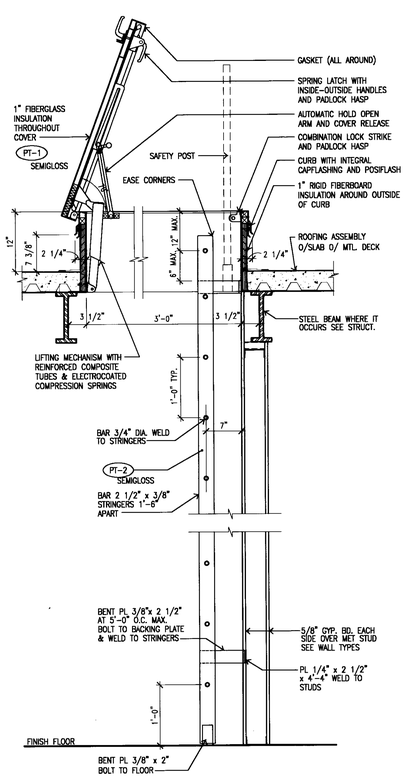

ROOF ACCESS LADDER 21

DE\RF-16 1"=1'-0"

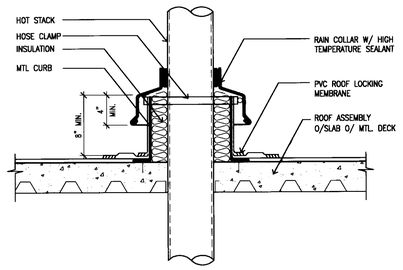

HEATED STACK 18

DE\RF-14 1 1/2" = 1'-0"

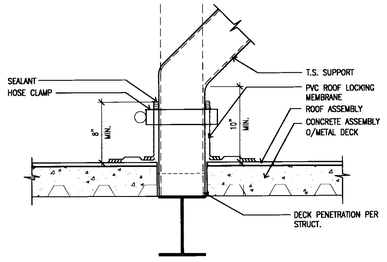

SCREEN WALL LEG SUPPORT 13

DE\RF-10 1 1/2" = 1'-0"

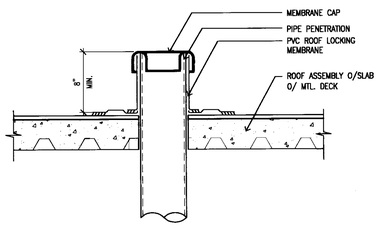

VENT STACK 17

DE\RF-13 1 1/2" = 1'-0"

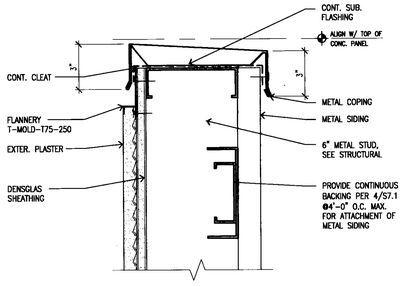

WALL COPING DETAIL 12

DE\RF-25 3" = 1'-0"

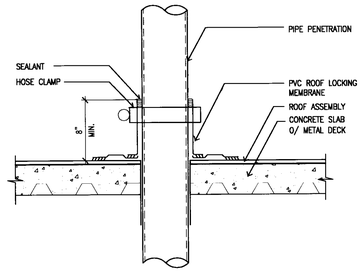

PIPE PENETRATION 16

DE\RF-12 1 1/2" = 1'-0"

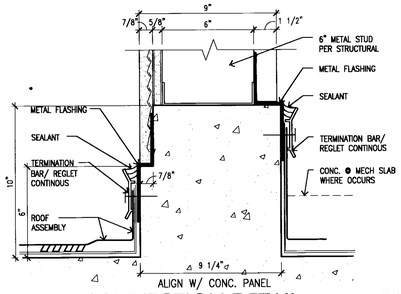

WALL CONNECTION DETAIL 11

DE\RF-24 3" = 1'-0"

NOTE: AFTER COMPLETE INSTALLATION OF THE ROOFING SYSTEM, CONTRACTOR SHALL TEST AND INSPECT ALL ROOF DRAINS TO ASSURE THAT NO CLOGGING OF THE DRAINAGE SYSTEM IS PRESENT.

*ALSO SEE PLUMBING DRAWINGS

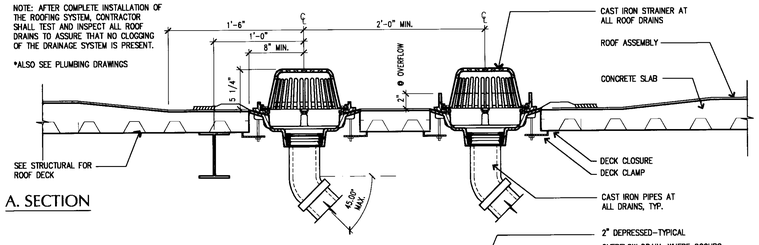

A. SECTION

B. PLAN

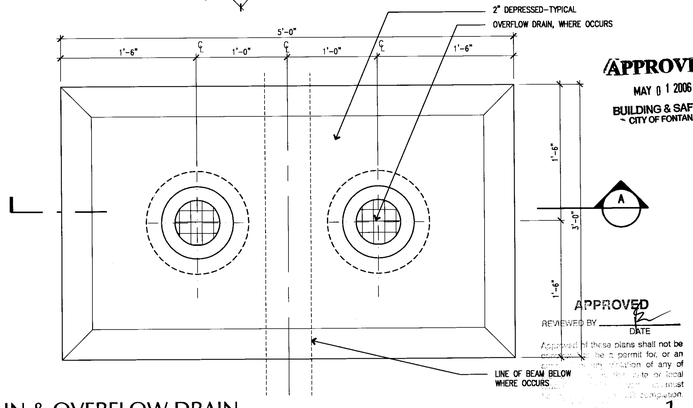

APPROVED
MAY 0 1 2006
BUILDING & SAFETY
CITY OF FONTANA

APPROVED
REVIEWED BY DATE

Approval of these plans shall not be construed to be a permit for, or an approval of any violation of any of the provisions of any state or local building or safety laws or regulations.

ROOF DRAIN & OVERFLOW DRAIN 1

DE\RF-01 1 1/2" = 1'-0"

LANGDON WILSON
ARCHITECTURE
PLANNING
INTERIORS

18800 VON KARMAN AVENUE, SUITE 200
IRVINE, CALIFORNIA 92612-1517
949 - 833 - 9193

STRUCTURAL
KPFF 949 - 252 - 3022
MECHANICAL
TKSC 949 - 756 - 0565
ELECTRICAL
GLP 714 - 751 - 1851
LANDSCAPE
FRANK RADMACHER 714 - 832 - 1774
CIVIL ENGINEER
IKE CONSULTING 714 - 241 - 0606
AUDIO / VISUAL
VENEKLASEN ASSOCIATES 310 - 450 - 1733
DATA TELEPHONE
PLANNET CONSULTING 714 - 982 - 5800

CITY OF FONTANA
DEVELOPMENT SERVICES
ORGANIZATION BUILDING

8353 SIERRA AVENUE FONTANA, CALIFORNIA

REV.	DATE	ISSUED FOR	REV.	DATE	ISSUED FOR
	10-17-05	DD PACKAGE			
	12-05-05	PLAN CHECK			
	02-06-06	PC RESUBMIT.			
	04-17-06	PERMIT SET			
	04-17-06	BID SET			

Stamp

LICENSED ARCHITECT JOHN PATRICK KELLY NO. C7181 EXPIRES 03-31-07 STATE OF CALIFORNIA

DATE: 11/01/05 SCALE: AS NOTED
DRAWN BY: SCT
JOB NO. L454-000 CADD TITLE A440

SHEET TITLE:
ROOF DETAILS

SHEET NUMBER:
A440

©Copyright 2005 Langdon Wilson

PERMIT SET / BID SET 04-17-06

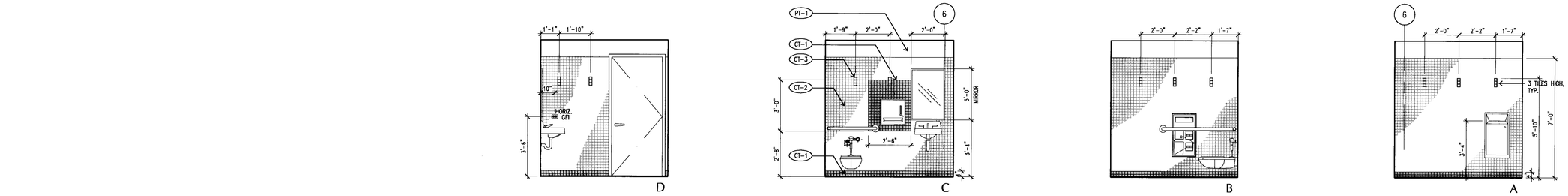

TYPICAL PUBLIC TOILET ELEVATIONS 6

3/8" = 1'-0"

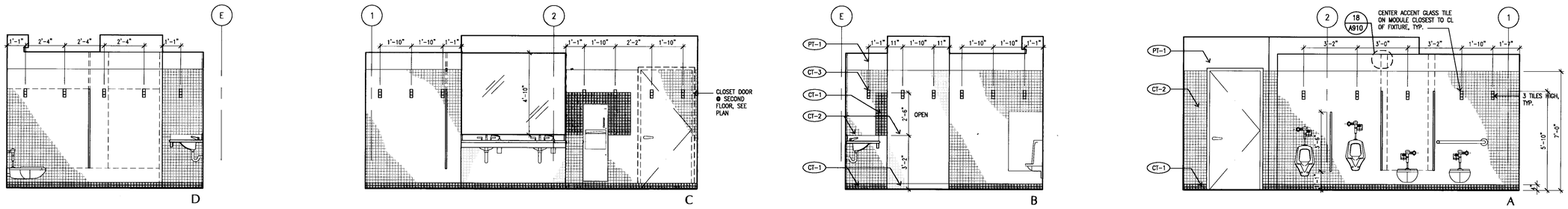

TYPICAL MEN'S ELEVATIONS 5

3/8" = 1'-0"

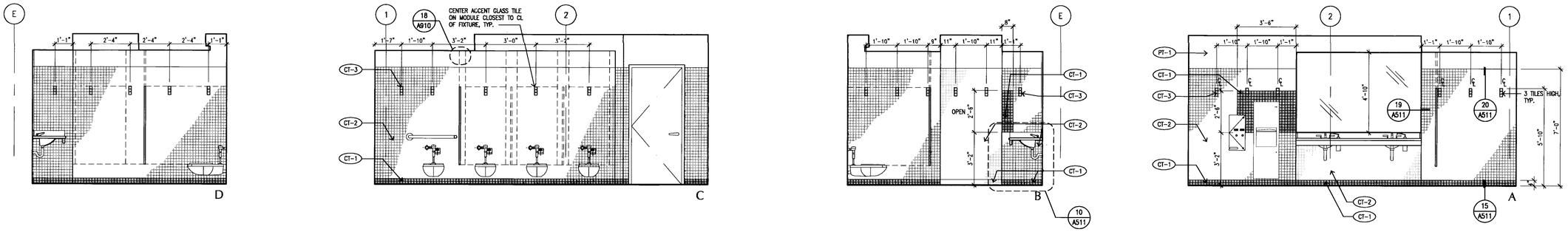

TYPICAL WOMEN'S ELEVATIONS 4

3/8" = 1'-0"

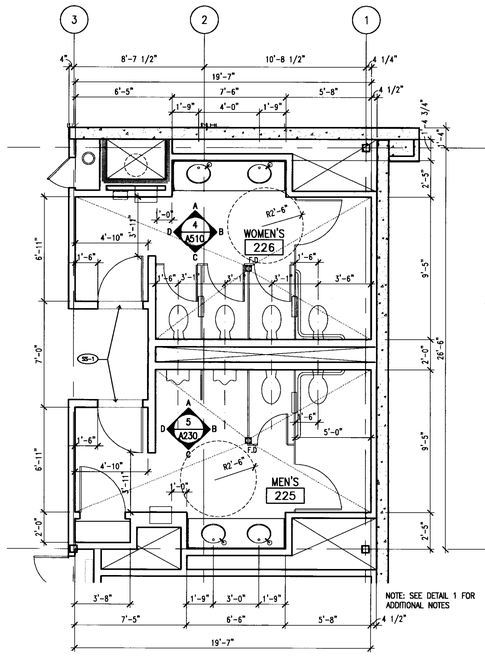

ENLARGED MEN'S & WOMEN'S - SECOND FLOOR 2

XR\XA-FL02 1/4" = 1'-0"

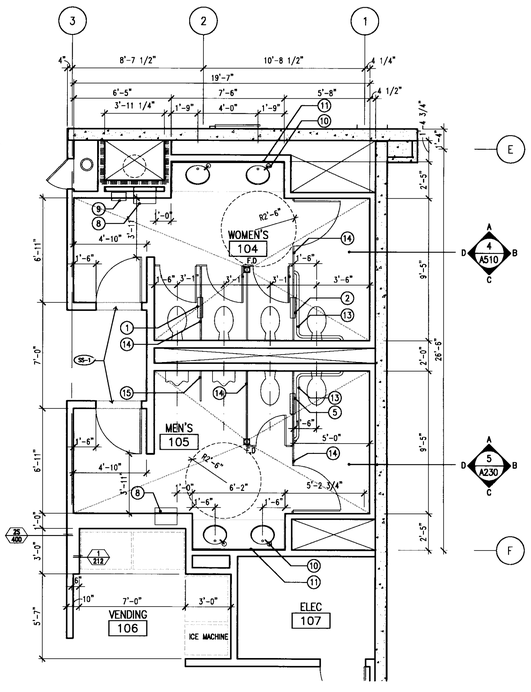

ENLARGED MEN'S & WOMEN'S - FIRST FLOOR 1

XR\XA-FL01 1/4" = 1'-0"

TOILET ACCESSORY LEGEND

BL\ACC-LEG.dwg

NOTES:
1) ALL TOILET ROOM ACCESSORIES SPECIFIED BELOW TO BE "BOBRICK" PRODUCTS (UNLESS NOTED OTHERWISE)
2) SEE ALSO A920 ACCESSORY LEGEND & MOUNTING HEIGHT

KEY	MANUF.	MODEL #	DESCRIPTION
1	BOBRICK	B-357	PARTITION MOUNTED TOILET SEAT COVER, NAPKIN DISPOSAL & TISSUE DISPENSER – SERVES 2 TOILET COMPARTMENTS
2	BOBRICK	B-3571	PARTITION MOUNTED TOILET SEAT COVER, NAPKIN DISPOSAL & TISSUE DISPENSER – SERVES 2 TOILET COMPARTMENTS, HC
3	BOBRICK	B-3574	RECESSED TOILET SEAT COVER, NAPKIN DISPOSAL & TISSUE DISPENSER
4	BOBRICK	B-3471	PARTITION MOUNTED TOILET SEAT COVER & TISSUE DISPENSER – SERVES 2 TOILET COMPARTMENTS, HC
5	BOBRICK	B-3474	RECESSED TOILET SEAT COVER & TISSUE DISPENSER
6	BOBRICK	B-3644	RECESSED WASTE RECEPTACLE
7	BOBRICK	B-3861	RECESSED ROLL PAPER TOWEL DISPENSER
8	BOBRICK	B-39601	RECESSED ROLL PAPER TOWEL DISPENSER & WASTE RECEPTACLE
9	BOBRICK	B-352 25	RECESSED NAPKIN/TAMPON VENDOR
10	BOBRICK	B-822	LAVATORY MOUNTED SOAP DISPENSER
11	BOBRICK	B-290	FRAMED MIRROR
12	BOBRICK	B-293	UTILITY SHELF WITH MOP/BROOM HOLDER & RAG HOOKS
13	BOBRICK	B-68137 B-6806	CORNER GRAB BAR; 1-1/2" DIA. SATIN S.S.; CONCEALED MOUNTING WITH SNAP FLANGE
14	TRESPA		TOILET PARTITION; VENDING MOUNTED; SOLID PHENOLIC; SEE FINISH MATERIALS SCHEDULE A810
15	TRESPA		URINAL SCREEN; WALL MOUNTED; SOLID PHENOLIC; SEE FINISH MATERIALS SCHEDULE A810

APPROVED
MAY 01 2006
BUILDING & SAFETY
CITY OF FONTANA

APPROVED
DATE

The reproduction of these plans shall not be construed to be a gift, loan or an assignment of any of the rights in and to the plans without the express written consent of the architect.

LANGDON WILSON
ARCHITECTURE
PLANNING
INTERIORS

18800 VON KARMAN AVENUE, SUITE 200
IRVINE, CALIFORNIA 92612-1517
949 - 833 - 9193

STRUCTURAL
KPFF 949 - 252 - 1022
MECHANICAL
TKSC 949 - 756 - 0565
ELECTRICAL
CLP 714 - 751 - 1851
LANDSCAPE
FRANK RADMACHER 714 - 832 - 1774
CIVIL ENGINEER
IKE CONSULTING 714 - 241 - 0606
AUDIO / VISUAL
VENEKLASEN ASSOCIATES 310 - 450 - 1733
DATA TELEPHONE
PLANNET CONSULTING 714 - 982 - 5800

CITY OF FONTANA

DEVELOPMENT SERVICES
ORGANIZATION BUILDING

8353 SIERRA AVENUE FONTANA, CALIFORNIA

REV.	DATE	ISSUED FOR	REV.	DATE	ISSUED FOR
	10-17-05	DD PACKAGE			
	12-05-05	PLAN CHECK			
	02-06-06	PC RESUBMIT.			
	04-17-06	PERMIT SET			
	04-17-06	BID SET			

Stamp

LICENSED ARCHITECT
JOHN PATRICK LALLY
LICENSE NO. C7181
EXPIRES 03-31-07
STATE OF CALIFORNIA

DATE: 11/01/05 SCALE: 1/8"=1'-0"
DRAWN BY: SCT
JOB NO. L454-000 CADD TITLE: A510

SHEET TITLE:
ENLARGED FLOOR PLANS

SHEET NUMBER:
A510

©Copyright 2005 Langdon Wilson

PERMIT SET / BID SET 04-17-06

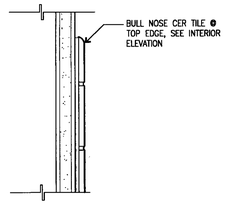

CERAMIC TILE - SECTION 20

DE\TILE-03 6" = 1'-0"

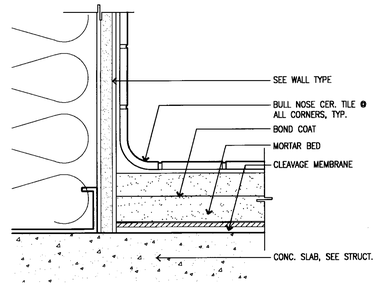

CERAMIC TILE - BASE 15

DE\TILE-04 6" = 1'-0"

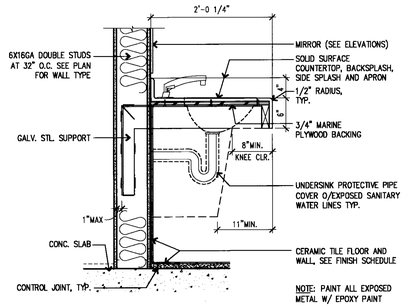

LAVATORY SECTION 10

DE\LAV-02 1" = 1'-0"

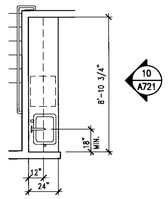

HALL 212 5

1/4"=1'-0"

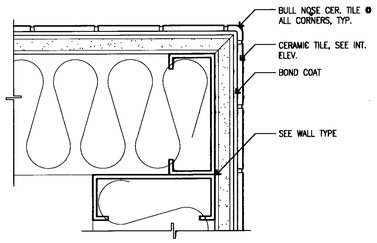

CERAMIC TILE - PLAN 19

DE\TILE-02 6" = 1'-0"

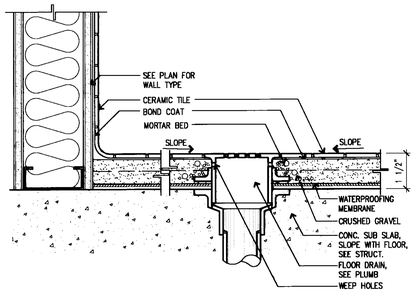

FLOOR DRAIN 14

DE\TILE-01 3" = 1'-0"

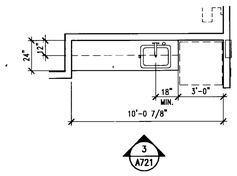

OPEN OFFICE 230 9

1/4"=1'-0"

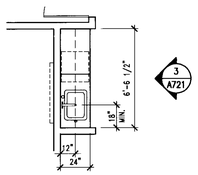

HALL 122 4

1/4"=1'-0"

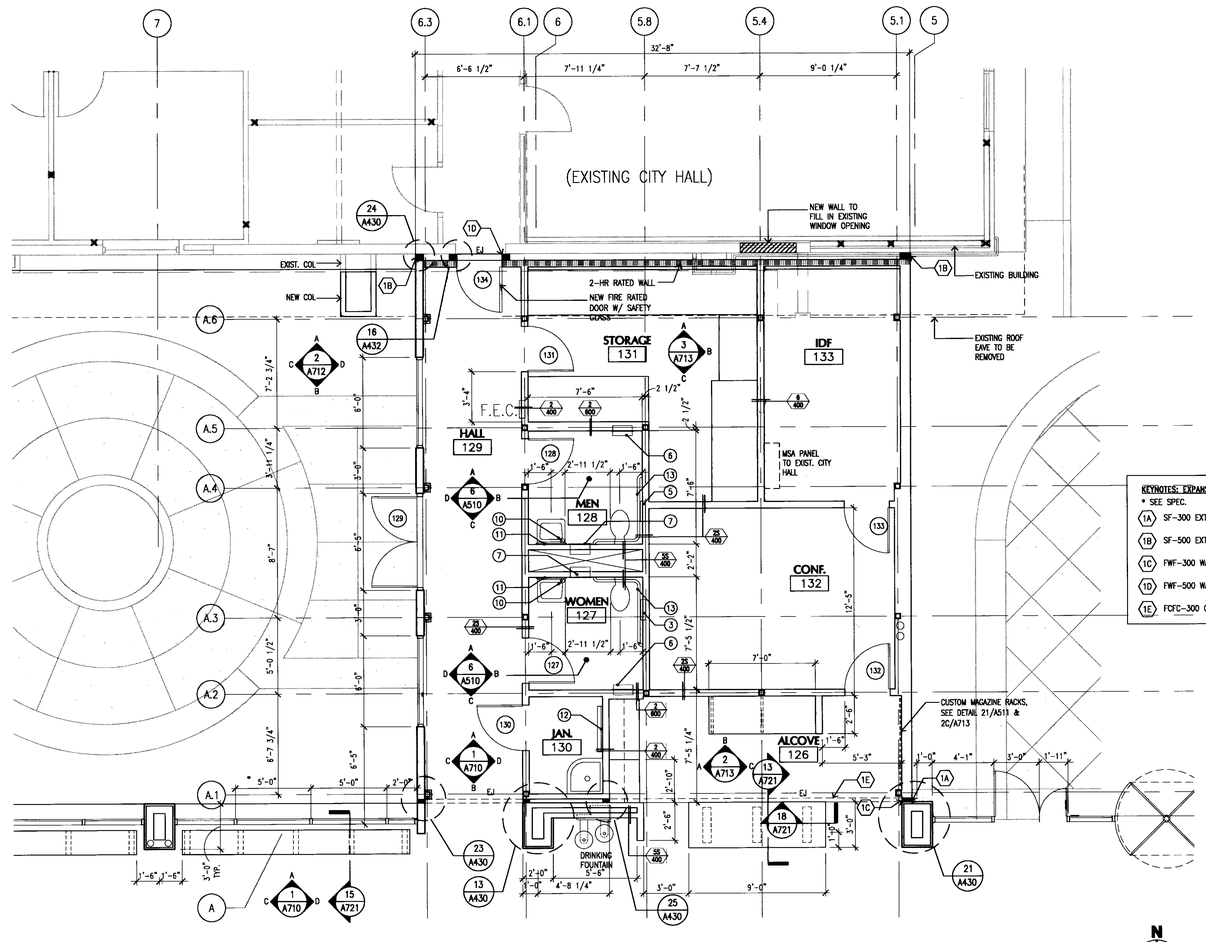

ENLARGED FLOOR PLAN 6

A511 1/4"=1'-0"

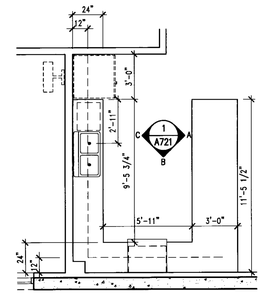

BREAK ROOM 103 3

1/4"=1'-0"

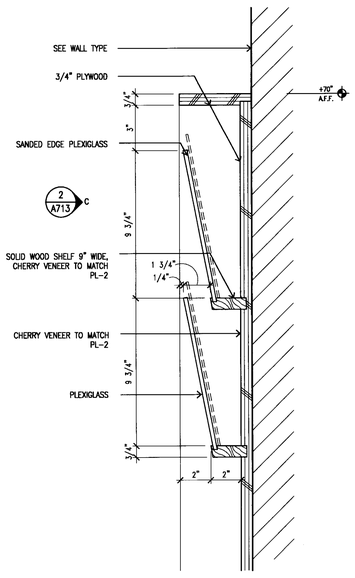

MAGAZINE SHELF 21

DE\MW-27 3"=1'-0"

TOILET ACCESSORY LEGEND

BL\ACC-LEG.dwg

NOTES:
1) ALL TOILET ROOM ACCESSORIES SPECIFIED BELOW TO BE "BOBRICK" PRODUCTS (UNLESS NOTED OTHERWISE)
2) SEE ALSO A920 ACCESSORY LEGEND & MOUNTING HEIGHT

KEY	MANUF.	MODEL #	DESCRIPTION
1	BOBRICK	B-357	PARTITION MOUNTED TOILET SEAT COVER, NAPKIN DISPOSAL & TISSUE DISPENSER – SERVES 2 TOILET COMPARTMENTS
2	BOBRICK	B-3571	PARTITION MOUNTED TOILET SEAT COVER, NAPKIN DISPOSAL & TISSUE DISPENSER – SERVES 2 TOILET COMPARTMENTS, HC
3	BOBRICK	B-3574	RECESSED TOILET SEAT COVER, NAPKIN DISPOSAL & TISSUE DISPENSER
4	BOBRICK	B-3471	PARTITION MOUNTED TOILET SEAT COVER & TISSUE DISPENSER – SERVES 2 TOILET COMPARTMENTS, HC
5	BOBRICK	B-3474	RECESSED TOILET SEAT COVER & TISSUE DISPENSER
6	BOBRICK	B-3644	RECESSED WASTE RECEPTACLE
7	BOBRICK	B-3861	RECESSED ROLL PAPER TOWEL DISPENSER
8	BOBRICK	B-39601	RECESSED ROLL PAPER TOWEL DISPENSER & WASTE RECEPTACLE
9	BOBRICK	B-352 25	RECESSED NAPKIN/TAMPON VENDOR
10	BOBRICK	B-822	LAVATORY MOUNTED SOAP DISPENSER
11	BOBRICK	B-290	FRAMED MIRROR
12	BOBRICK	B-293	UTILITY SHELF WITH MOP/BROOM HOLDER & RAG HOOKS
13	BOBRICK	B-68137 B-6806	CORNER GRAB BAR; 1-1/2" DIA. SATIN S.S.; CONCEALED MOUNTING WITH SNAP FLANGE
14	TRESPA		TOILET PARTITION; CEILING MOUNTED; SOLID PHENOLIC; SEE FINISH MATERIALS SCHEDULE A810
15	TRESPA		URINAL SCREEN; WALL MOUNTED; SOLID PHENOLIC; SEE FINISH MATERIALS SCHEDULE A810

APPROVED
MAY 01 2006
BUILDING & SAFETY
CITY OF FONTANA

APPROVED
BY DATE

Ownership of these plans shall not be ... to be a permit to ... or a ... of any violation of any ...

LANGDON WILSON
ARCHITECTURE
PLANNING
INTERIORS

18800 VON KARMAN AVENUE, SUITE 200
IRVINE, CALIFORNIA 92612-1517
949 - 833 - 9193

STRUCTURAL
KPFF 949 - 252 - 1022
MECHANICAL
TKSC 949 - 756 - 0565
ELECTRICAL
GLP 714 - 751 - 1851
LANDSCAPE
FRANK RADMACHER 714 - 832 - 1774
CIVIL ENGINEER
IKE CONSULTING 714 - 241 - 0606
AUDIO / VISUAL
VENEKLASEN ASSOCIATES 310 - 450 - 1733
DATA TELEPHONE
PLANNET CONSULTING 714 - 982 - 5800

CITY OF FONTANA
DEVELOPMENT SERVICES
ORGANIZATION BUILDING

8353 SIERRA AVENUE FONTANA, CALIFORNIA

REV.	DATE	ISSUED FOR	REV.	DATE	ISSUED FOR
	10-17-05	DD PACKAGE			
	12-05-05	PLAN CHECK			
	02-06-06	PC RESUBMIT.			
	03-13-06	PC#2 RESUBMIT.			
	04-17-06	PERMIT SET			
	04-17-06	BID SET			

Stamp

LICENSED ARCHITECT
DON PATRICK KUTZ
NO. C7181
REN. 03-31-07
STATE OF CALIFORNIA

DATE: 11/01/05 SCALE: 1/8"=1'-0"
DRAWN BY: SCT
JOB NO. L454-000 CADD TITLE: A511

SHEET TITLE:
ENLARGED FLOOR PLANS

SHEET NUMBER:
A511

©Copyright 2005 Langdon Wilson

PERMIT SET / BID SET 04-17-06

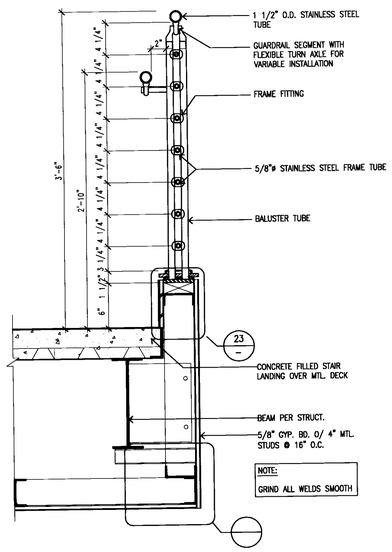

GUARDRAIL DETAIL 24

DE\STR-07A 1 1/2"=1'-0"

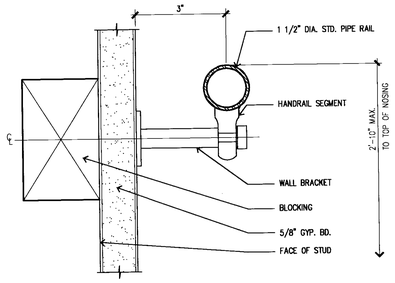

WALL HANDRAIL 20

STR-05 6'-1'-0"

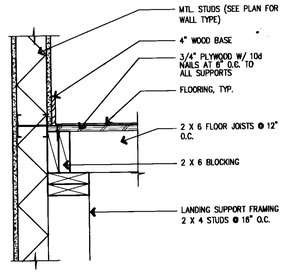

LANDING 19

STR-04 1 1/2"=1'-0"

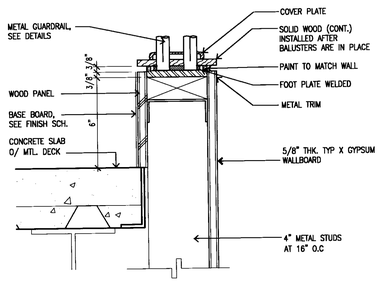

HANDRAIL & CAP 23

STR-12A 3'=1'-0"

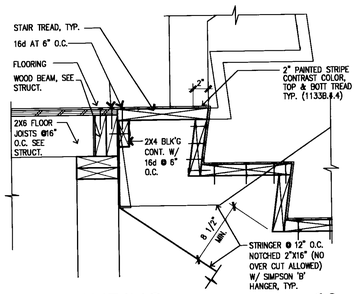

STAIR INT. LANDING 18

STR-03 1 1/2"=1'-0"

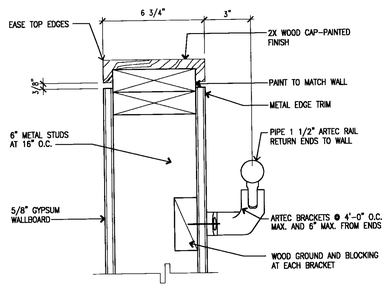

HANDRAIL & CAP 22

STR-12 3'=1'-0"

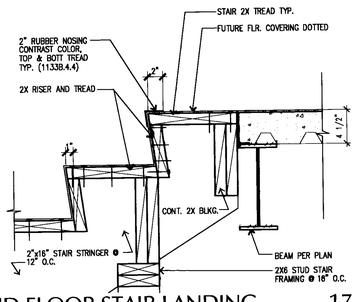

2ND FLOOR STAIR LANDING 17

STR-02 1 1/2"=1'-0"

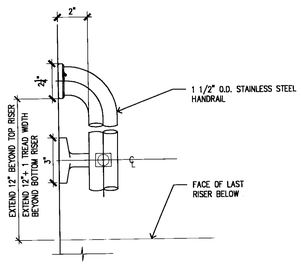

HANDRAIL PLAN 21

STR-06 3'=1'-0"

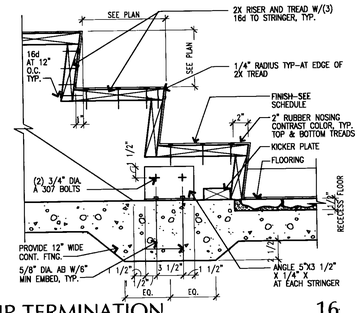

STAIR TERMINATION 16

STR-01 1 1/2"=1'-0"

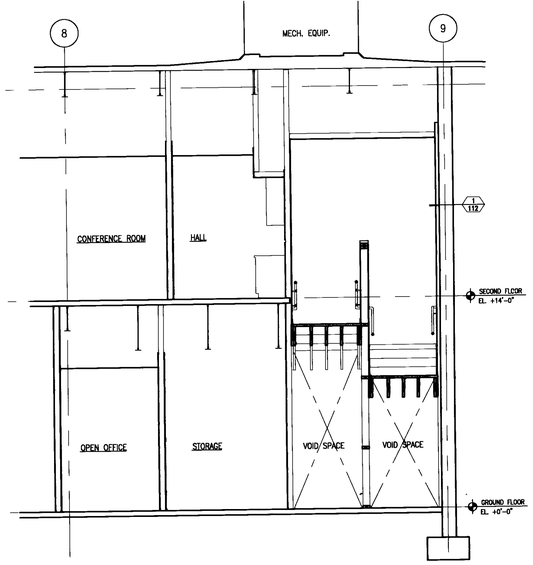

STAIR 1 - SECTION 6

1/4" = 1'-0"

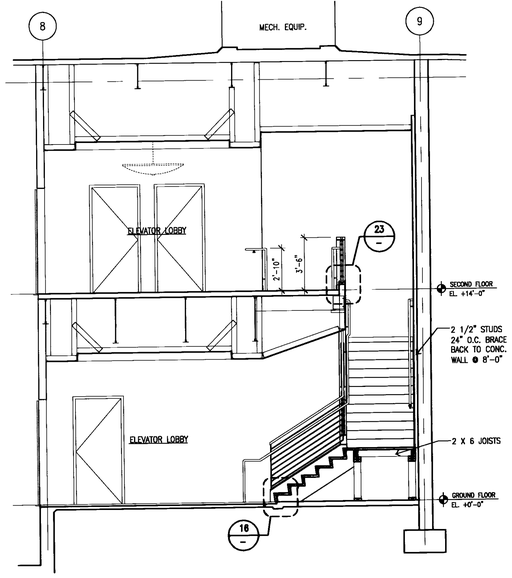

STAIR 1 - SECTION 5

1/4" = 1'-0"

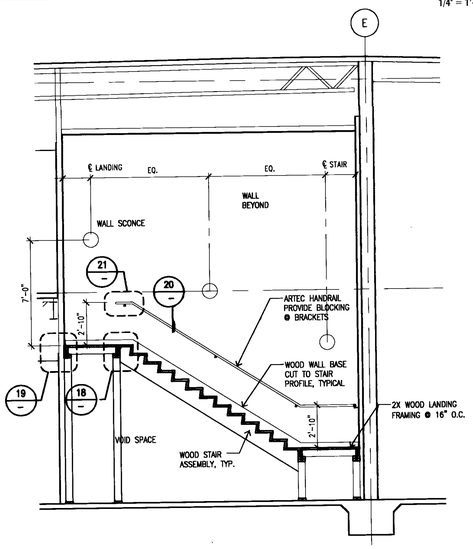

STAIR 1 - SECTION 4

1/4" = 1'-0"

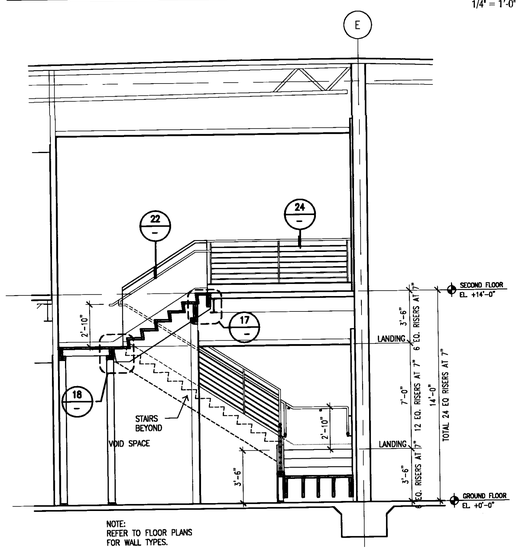

STAIR 1 - SECTION 3

1/4" = 1'-0"

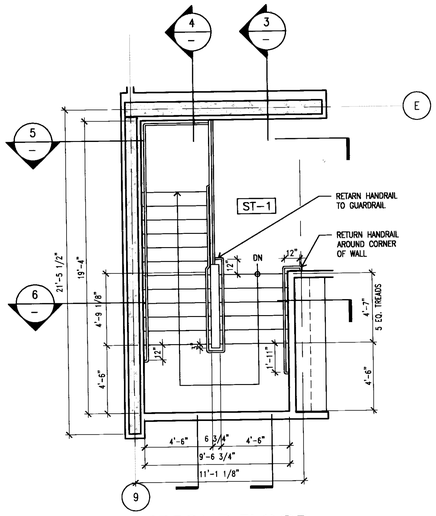

STAIR 1 PLAN - SECOND FLOOR 2

1/4" = 1'-0"

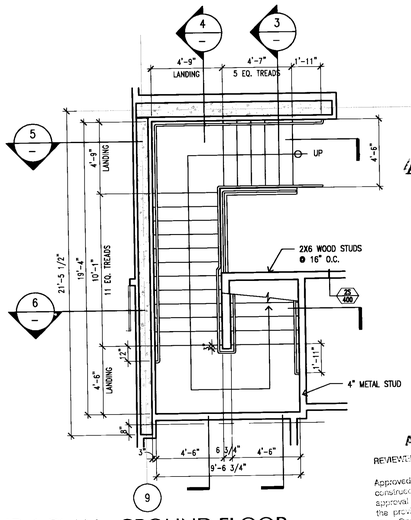

STAIR 1 PLAN - GROUND FLOOR

1/4" = 1'-0"

APPROVED
MAY 01 2006
BUILDING & SAFETY
CITY OF FONTANA

REVIEWED BY ____ DATE

Approved of these plans shall not be construed to be a permit to, or an approval of any violation of any of the provisions of the state or local laws. One set of approved plans shall be kept on the job until completion.

WILSON

LANGDON WILSON
ARCHITECTURE
PLANNING
INTERIORS

18800 VON KARMAN AVENUE, SUITE 200
IRVINE, CALIFORNIA 92612-1517
949 - 833 - 9193

STRUCTURAL
KPFF 949 - 252 - 1022
MECHANICAL
TRSC 949 - 756 - 0565
ELECTRICAL
CLP 714 - 751 - 1851
LANDSCAPE "
FRANK RADMACHER 714 - 832 - 1774
CIVIL ENGINEER
IKE CONSULTING 714 - 241 - 0606
AUDIO / VISUAL
VENEKLASEN ASSOCIATES 310 - 450 - 1733
DATA TELEPHONE
PLANNET CONSULTING 714 - 982 - 5800

CITY OF FONTANA
DEVELOPMENT SERVICES ORGANIZATION BUILDING

8353 SIERRA AVENUE FONTANA, CALIFORNIA

REV.	DATE	ISSUED FOR	REV.	DATE	ISSUED FOR
	10-17-05	DD PACKAGE			
	12-05-05	PLAN CHECK			
	12-06-06	PC RESUBMIT.			
	04-17-06	PERMIT SET			
	04-17-06	BID SET			

Stamp

LICENSED ARCHITECT
JON PATRICK ALLEN
NO. C7181
REN. 03-31-07
STATE OF CALIFORNIA

DATE: 11/01/05 SCALE: AS NOTED
DRAWN BY: SCT
JOB NO. L454-000 CADD TITLE A610

SHEET TITLE:
ENLARGED STAIR PLANS SECTIONS & DETAILS

SHEET NUMBER:
A610

©Copyright 2005 Langdon Wilson

PERMIT SET / BID SET 04-17-06

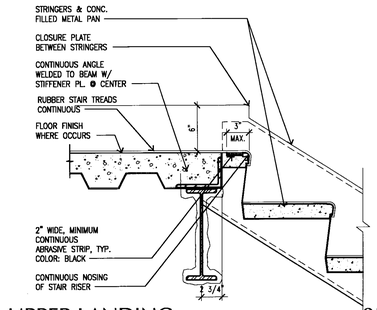

UPPER LANDING 25

DE\STR-08 1 1/2"=1'-0"

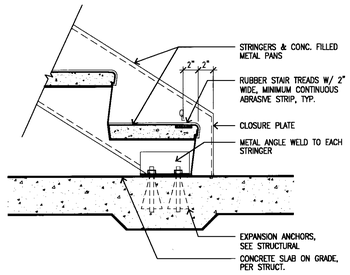

STAIR AT BOTTOM LANDING 20

DE\STR-09 1 1/2"=1'-0"

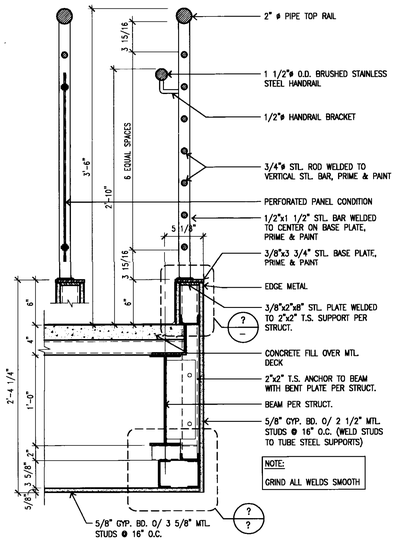

GUARDRAIL AT LANDING 23

DE\STR-14A 1 1/2"=1'-0"

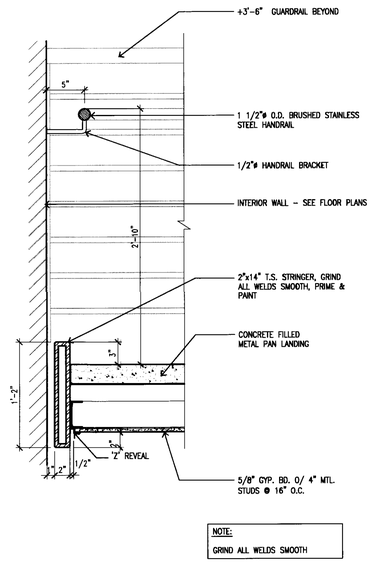

HANDRAIL AT LANDING 18

DE\STR-14B 1 1/2"=1'-0"

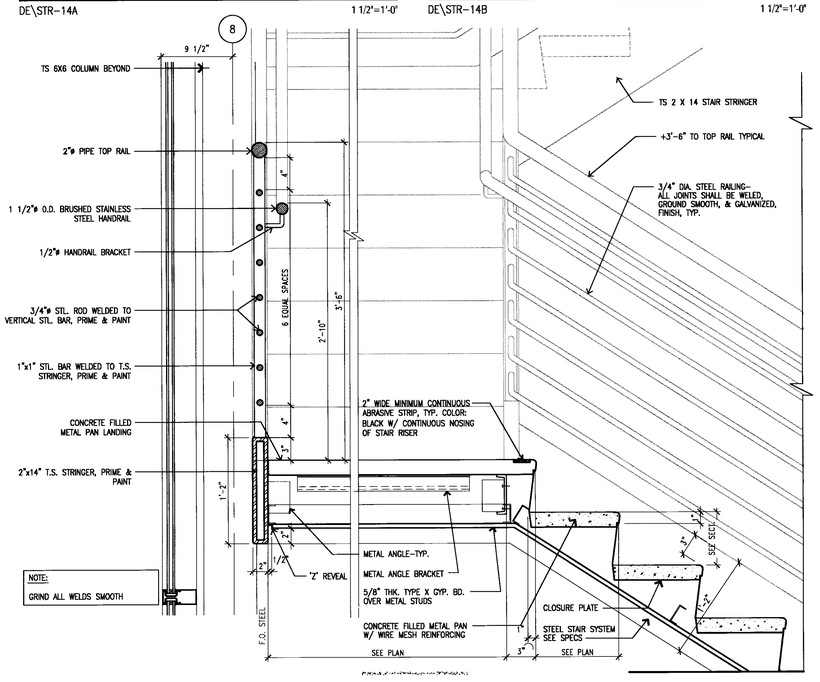

INTERMEDIATE STAIR SECTION 16

STR-19 1 1/2"=1'-0"

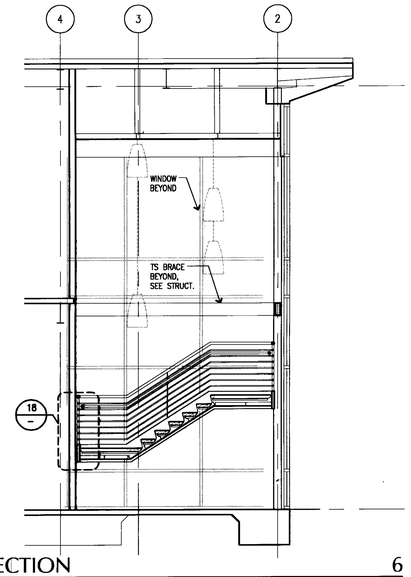

STAIR 2 - SECTION 6

1/4" = 1'-0"

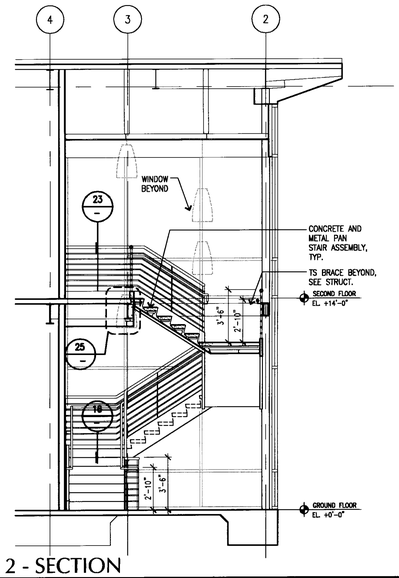

STAIR 2 - SECTION 5

1/4" = 1'-0"

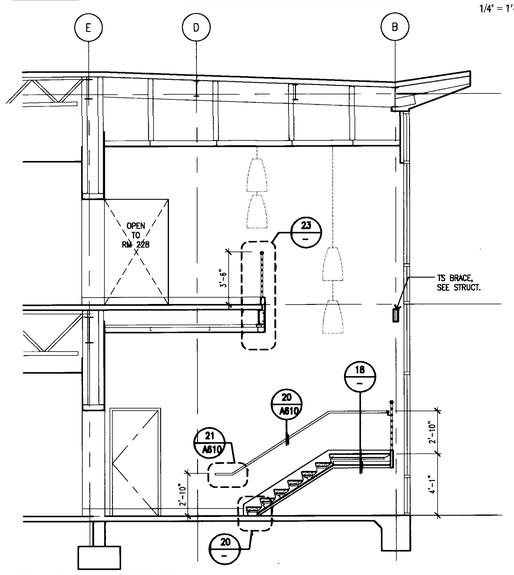

STAIR 2 - SECTION 4

1/4" = 1'-0"

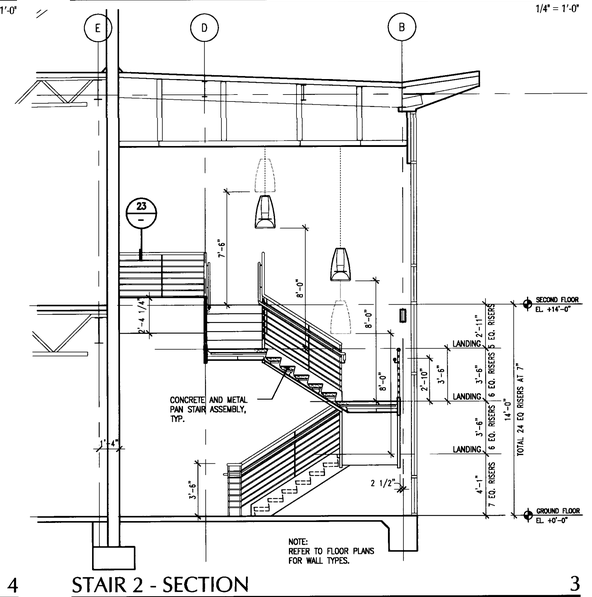

STAIR 2 - SECTION 3

1/4" = 1'-0"

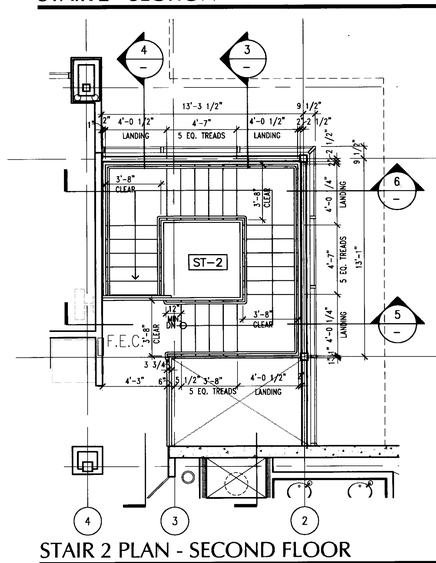

STAIR 2 PLAN - SECOND FLOOR 2

1/4" = 1'-0"

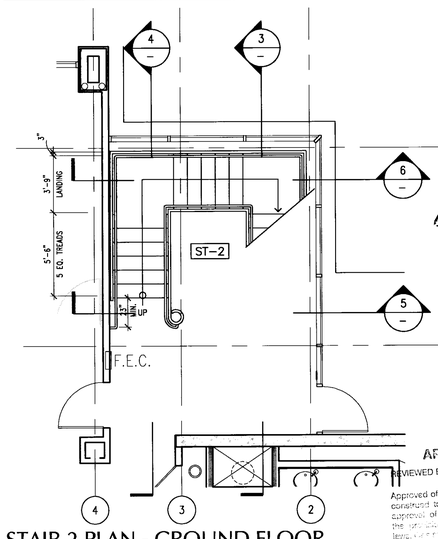

APPROVED
MAY 0 1 2006
BUILDING & SAFETY
~ CITY OF FONTANA

APPROVED
REVIEWED BY DATE
Approved of these plans shall not be construed to be a permit for, or an approval of any violation of any of the provisions of the building laws of the jurisdiction. Permits shall be issued only when all fees have been paid and all conditions of approval have been satisfied.

STAIR 2 PLAN - GROUND FLOOR 1

1/4" = 1'-0"

LANGDON WILSON
ARCHITECTURE
PLANNING
INTERIORS

18800 VON KARMAN AVENUE, SUITE 200
IRVINE, CALIFORNIA 92612-1517
949 - 833 - 9793

STRUCTURAL
KPFF 949 - 252 - 1022
MECHANICAL
TKSC 949 - 756 - 0565
ELECTRICAL
GLP 714 - 751 - 1851
LANDSCAPE
FRANK RADMACHER 714 - 832 - 1774
CIVIL ENGINEER
IKE CONSULTING 714 - 241 - 0606
AUDIO / VISUAL
VENEKLASEN ASSOCIATES 310 - 450 - 1733
DATA TELEPHONE
PLANNET CONSULTING 714 - 982 - 5800

CITY OF FONTANA
DEVELOPMENT SERVICES
ORGANIZATION BUILDING

8353 SIERRA AVENUE FONTANA, CALIFORNIA

REV.	DATE	ISSUED FOR	REV.	DATE	ISSUED FOR
	10-17-05	DD PACKAGE			
	12-05-05	PLAN CHECK			
	03-06-06	PC RESUBMIT.			
	04-17-06	PERMIT SET			
	04-17-06	BID SET			

Stamp

LICENSED ARCHITECT
PATRICK ALLEN
NO. C7181
REN. 03-31-2006
STATE OF CALIFORNIA

DATE: 11/01/05 SCALE: AS NOTED
DRAWN BY: SCT
JOB NO. L454-000 CADD TITLE A611

SHEET TITLE:
ENLARGED STAIR PLANS
SECTIONS & DETAILS

SHEET NUMBER:
A611

©Copyright 2005 Langdon Wilson

PERMIT SET / BID SET 04-17-06

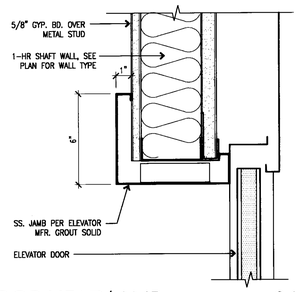

ELEV. DOOR HEAD/JAMB 24

DE\ELVTR-06 3"=1'-0"

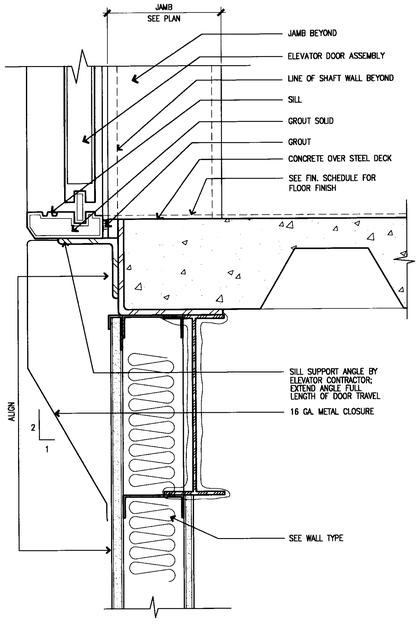

ELEVATOR FLOOR SILL 22

DE\ELVTR-07 3"=1'-0"

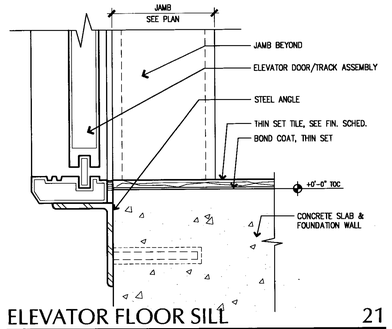

ELEVATOR FLOOR SILL 21

DE\ELVTR-08 3"=1'-0"

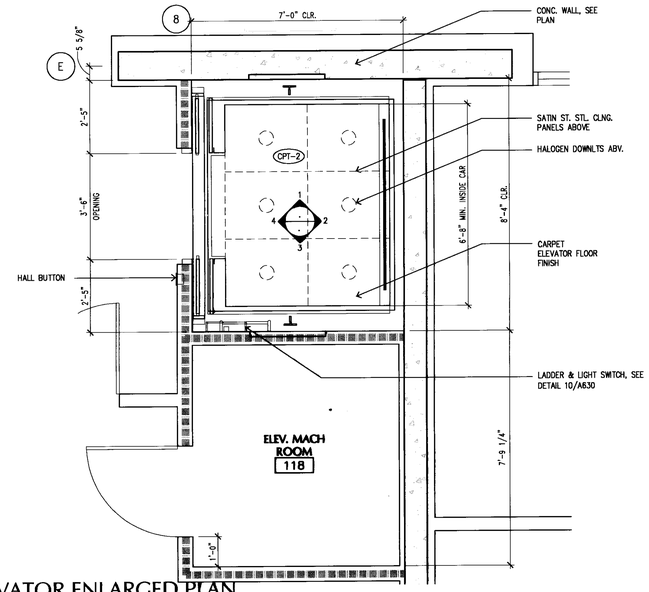

ELEVATOR ENLARGED PLAN 14

DE/ELV2 1/2" = 1'-0"

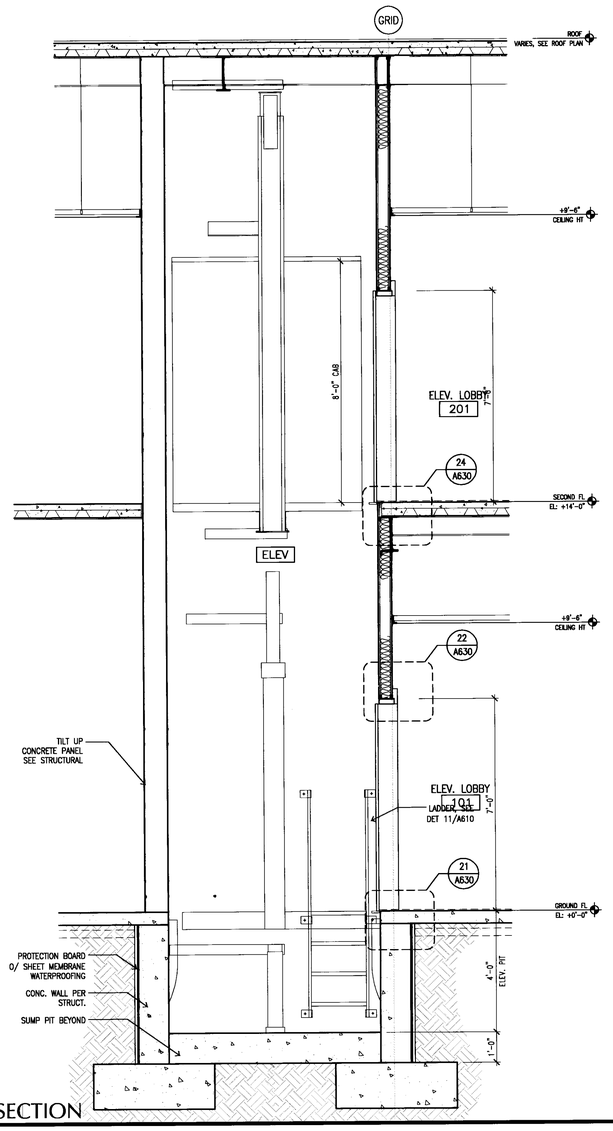

ELEVATOR SECTION 11

XR/XA-SECEL 1/2" = 1'-0"

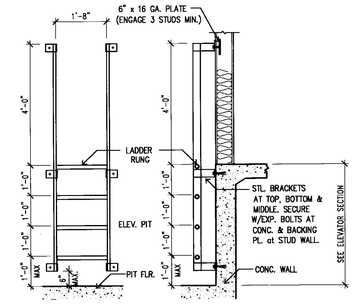

ACCESS LADDER 10

DE\ELVTR-02 1/2"=1'-0"

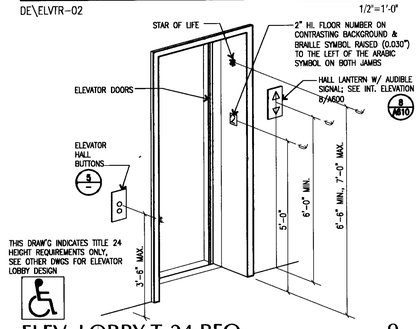

ELEV. LOBBY T-24 REQ. 9

DE\ELVTR-05 NTS

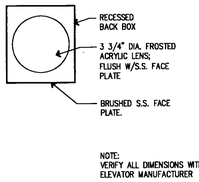

NOTE:
VERIFY ALL DIMENSIONS WITH ELEVATOR MANUFACTURER

HALL LANTERN 8

DE\ELVTR-04 3"=1'-0"

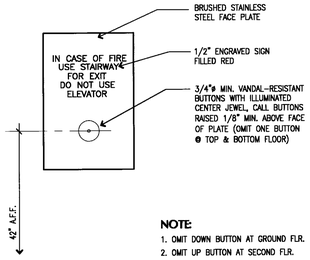

NOTE:
1. OMIT DOWN BUTTON AT GROUND FLR.
2. OMIT UP BUTTON AT SECOND FLR.

CALL BUTTON 5

DE\ELVTR-03 3"=1'-0"

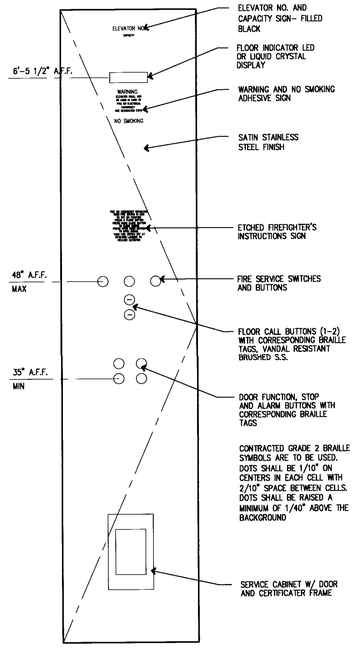

PANEL DETAIL 3

DE\ELVTR-01 1 1/2"=1'-0"

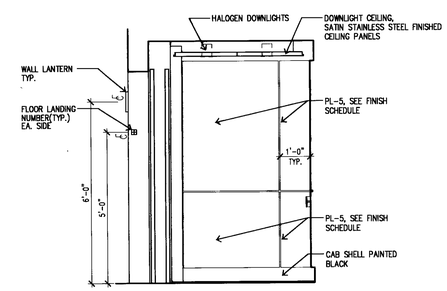

1

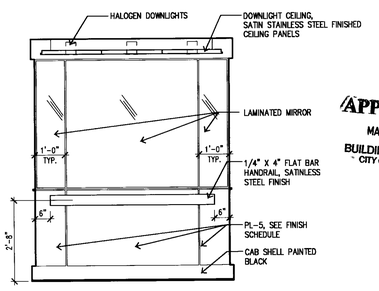

2

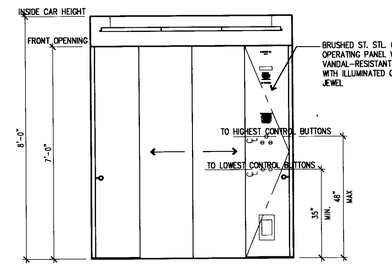

3

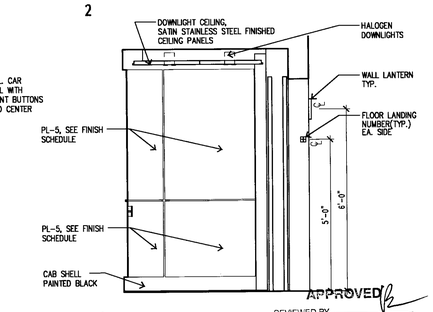

4

ELEVATOR INTERIOR ELEVATIONS 1

DE/ELV1 1/2" = 1'-0"

APPROVED
REVIEWED BY DATE

Approval of these plans shall not be construed to be a permit to, or an approval of any violation of any [illegible]

LANGDON WILSON
ARCHITECTURE
PLANNING
INTERIORS

18800 VON KARMAN AVENUE, SUITE 200
IRVINE, CALIFORNIA 92612-1517
949 - 833 - 9193

STRUCTURAL
KPFF 949 - 252 - 1022
MECHANICAL
TKSC 949 - 756 - 0565
ELECTRICAL
GLF 714 - 751 - 1851
LANDSCAPE
FRANK RADMACHER 714 - 832 - 1774
CIVIL ENGINEER
IKE CONSULTING 714 - 241 - 0606
AUDIO / VISUAL
VENIEKLASEN ASSOCIATES 310 - 450 - 1733
DATA TELEPHONE
PLANNET CONSULTING 714 - 982 - 5800

CITY OF FONTANA
DEVELOPMENT SERVICES
ORGANIZATION BUILDING
8353 SIERRA AVENUE FONTANA, CALIFORNIA

REV.	DATE	ISSUED FOR	REV.	DATE	ISSUED FOR
	10-17-05	DD PACKAGE			
	12-05-05	PLAN CHECK			
	02-06-06	PC RESUBMIT.			
	04-17-06	PERMIT SET			
	04-17-06	BID SET			

APPROVED
MAY 11 2006
BUILDING & SAFETY
CITY OF FONTANA

Stamp
LICENSED ARCHITECT
JON PATRICK ALDER
NO. C7181
EXP. 03-31-07
STATE OF CALIFORNIA

DATE: 11/01/05 SCALE: AS NOTED
DRAWN BY: SCT
JOB NO. L454-000 CADD TITLE: A630

SHEET TITLE:
ELEVATOR PLANS / ENLARGED AND DETAILS

SHEET NUMBER:
A630

©Copyright 2005 Langdon Wilson

PERMIT SET / BID SET 04-17-06

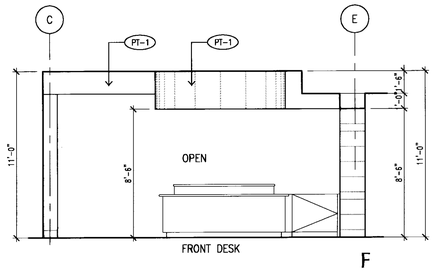

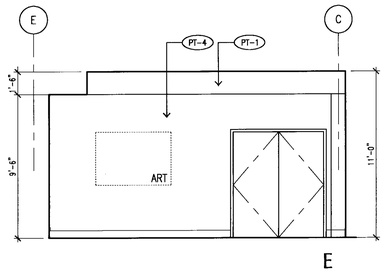

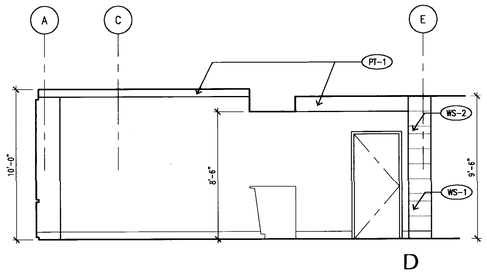

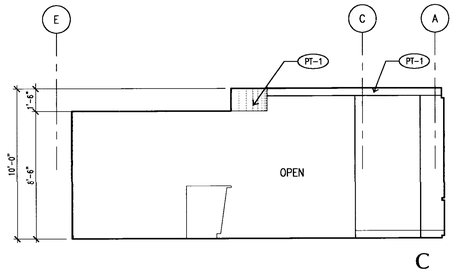

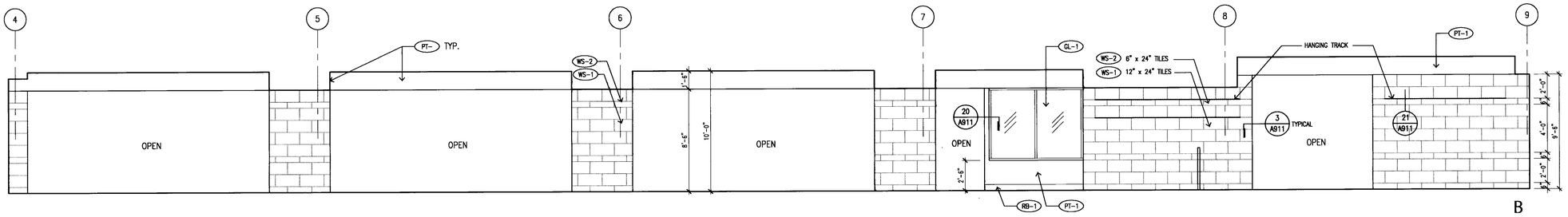

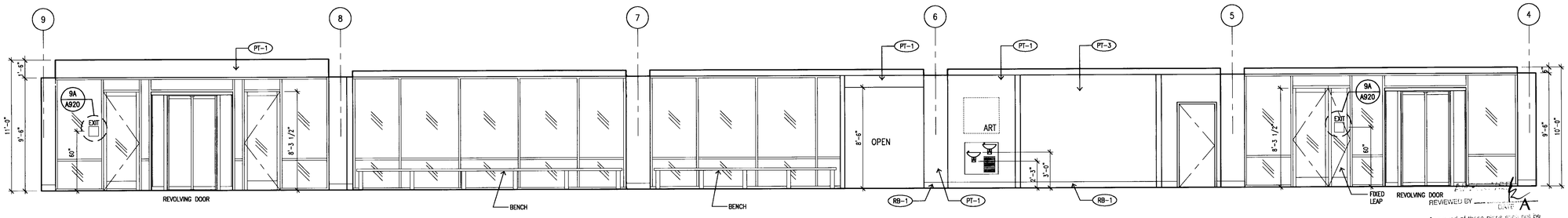

FINISH KEYNOTES

1. FOR FINISH SCHEDULE, SEE SHT. A810

LEGEND

ACT-1	ACOUSTIC CEILING TILE	PT-1	PAINT
CPT-1	CARPET-TILE	TPN-1	TOILET ROOM PARTITION
CS	CONCRETE, SEALED	TWF	TACKABLE WALL FINISH
CT-1	CERAMIC TILE	SS-1	SOLID SURFACE
EPX-1	EPOXY FLOORING	ST-1	STONE
FRP-1	FIBER REINFORCED PLASTIC	SL-1	LINOLEUM
GL-1	CLEAR GLASS	RB-1	RUBBER BASE
GL-2	TINTED GLASS	WC-1	WALL COVERING
PL-1	PLASTIC LAMINATE	WS-1	WALL STONE

DEPRESSED SLAB FOR FLOOR FINISH

WALL STONE FINISH, SEE INTERIOR ELEVATIONS

APPROVED
MAY 01 2006
BUILDING & SAFETY
CITY OF FONTANA

Approval of these plans shall not be construed to be a permit, license or approval of any violation of any of the provisions of the Uniform Codes. A copy of this plan must be kept on the job until completion.
WILLDAN 1/4"=1'-0"

INTERIOR ELEVATIONS (MAIN LOBBY # 100) 1

LANGDON WILSON
ARCHITECTURE
PLANNING
INTERIORS

18800 VON KARMAN AVENUE, SUITE 200
IRVINE, CALIFORNIA 92612-1517
949 · 833 · 9193

STRUCTURAL
KPFF 949 · 252 · 1022
MECHANICAL
TKSC 949 · 756 · 0565
ELECTRICAL
GLP 714 · 751 · 1851
LANDSCAPE
FRANK RADMACHER 714 · 832 · 1774
CIVIL ENGINEER
IKE CONSULTING 714 · 241 · 0606
AUDIO / VISUAL
VENEKLASEN ASSOCIATES 310 · 450 · 1733
DATA TELEPHONE
PLANNET CONSULTING 714 · 982 · 5800

CITY OF FONTANA
DEVELOPMENT SERVICES
ORGANIZATION BUILDING
8353 SIERRA AVENUE FONTANA, CALIFORNIA

REV.	DATE	ISSUED FOR	REV.	DATE	ISSUED FOR
	10-17-05	DD PACKAGE			
	12-05-05	PLAN CHECK			
	02-06-06	PC RESUBMIT.			
	04-17-06	PERMIT SET			
	04-17-06	BID SET			

Stamp

LICENSED ARCHITECT
JOHN PATRICK ALLEN
NO. C7181
REN. 03-31-07
STATE OF CALIFORNIA

DATE: 11/01/05 SCALE: 1/4"=1'-0"
DRAWN BY: SCT
JOB NO. L454-000 CADD TITLE: A710

SHEET TITLE:
FIRST FLOOR
INTERIOR ELEVATIONS

SHEET NUMBER:
A710

©Copyright 2005 Langdon Wilson

PERMIT SET / BID SET 04-17-06

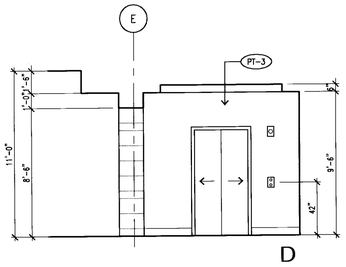

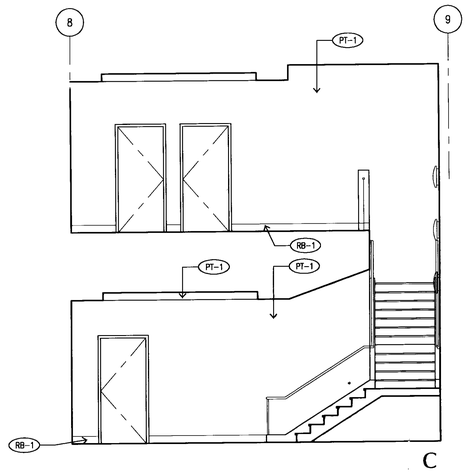

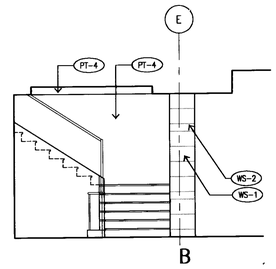

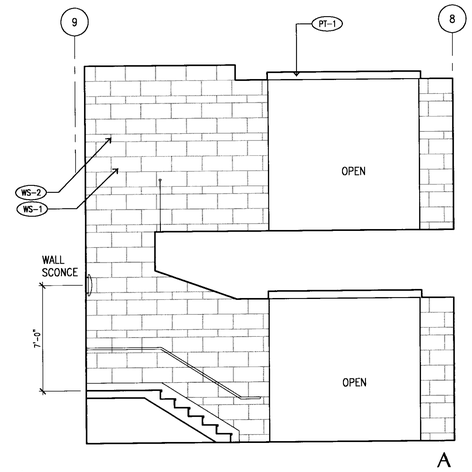

INTERIOR ELEVATIONS (ELEV. LOBBY # 101) 2

1/4"=1'-0"

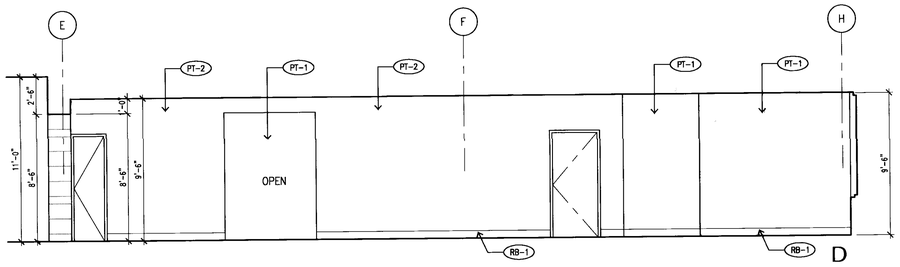

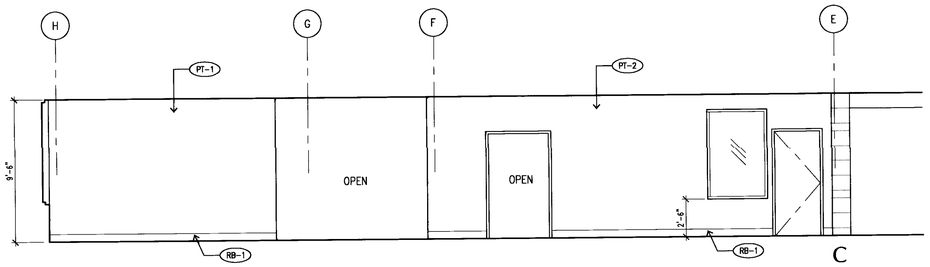

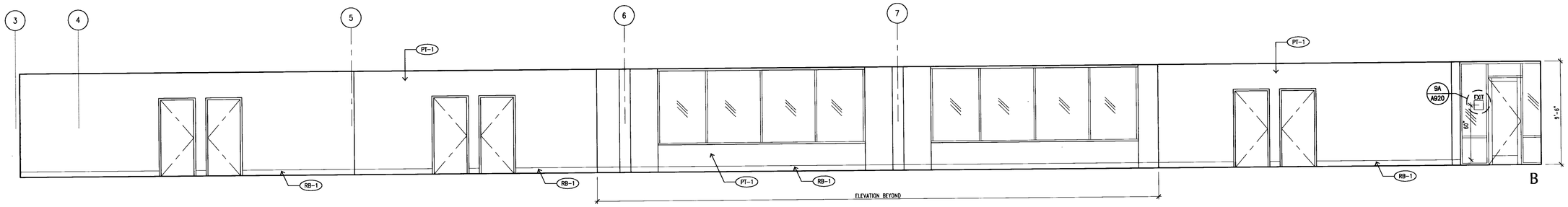

APPROVED
MAY 0 1 2006
BUILDING & SAFETY
CITY OF FONTANA

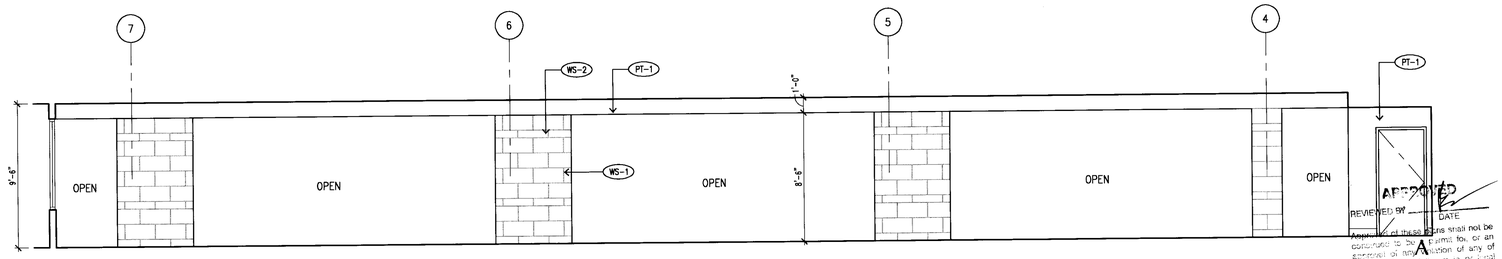

APPROVED
REVIEWED BY _____ DATE _____
Approval of these plans shall not be construed to be a permit for, or an approval of any violation of any of the provisions of any ordinance or regulation of this jurisdiction.

INTERIOR ELEVATIONS (OPEN OFFICE # 103) 1

1/4"=1'-0"

LANGDON WILSON
ARCHITECTURE
PLANNING
INTERIORS

18800 VON KARMAN AVENUE, SUITE 200
IRVINE, CALIFORNIA 92612-1517
949 - 833 - 9193

STRUCTURAL
KPFF 949 - 252 - 1022
MECHANICAL
TKSC 949 - 756 - 0565
ELECTRICAL
GLP 714 - 751 - 1851
LANDSCAPE
FRANK RADMACHER 714 - 832 - 1774
CIVIL ENGINEER
IKE CONSULTING 714 - 241 - 0606
AUDIO / VISUAL
VENEKLASEN ASSOCIATES 310 - 450 - 1733
DATA TELEPHONE
PLANNET CONSULTING 714 - 982 - 5800

CITY OF FONTANA
DEVELOPMENT SERVICES
ORGANIZATION BUILDING
8353 SIERRA AVENUE FONTANA, CALIFORNIA

REV.	DATE	ISSUED FOR	REV.	DATE	ISSUED FOR
	10-17-05	DD PACKAGE			
	12-05-05	PLAN CHECK			
	12-06-06	PC RESUBMIT.			
	04-17-06	PERMIT SET			
	04-17-06	BID SET			

Stamp

LICENSED ARCHITECT
JON PATRICK ALLEN
NO. C7181
REN. 03-31-07
STATE OF CALIFORNIA

DATE: 11/01/05 SCALE: 1/4"=1'-0"
DRAWN BY: SCT
JOB NO. L454-000 CADD TITLE: A711

SHEET TITLE:
FIRST FLOOR
INTERIOR ELEVATIONS

SHEET NUMBER:
A711

©Copyright 2005 Langdon Wilson

PERMIT SET / BID SET 04-17-06

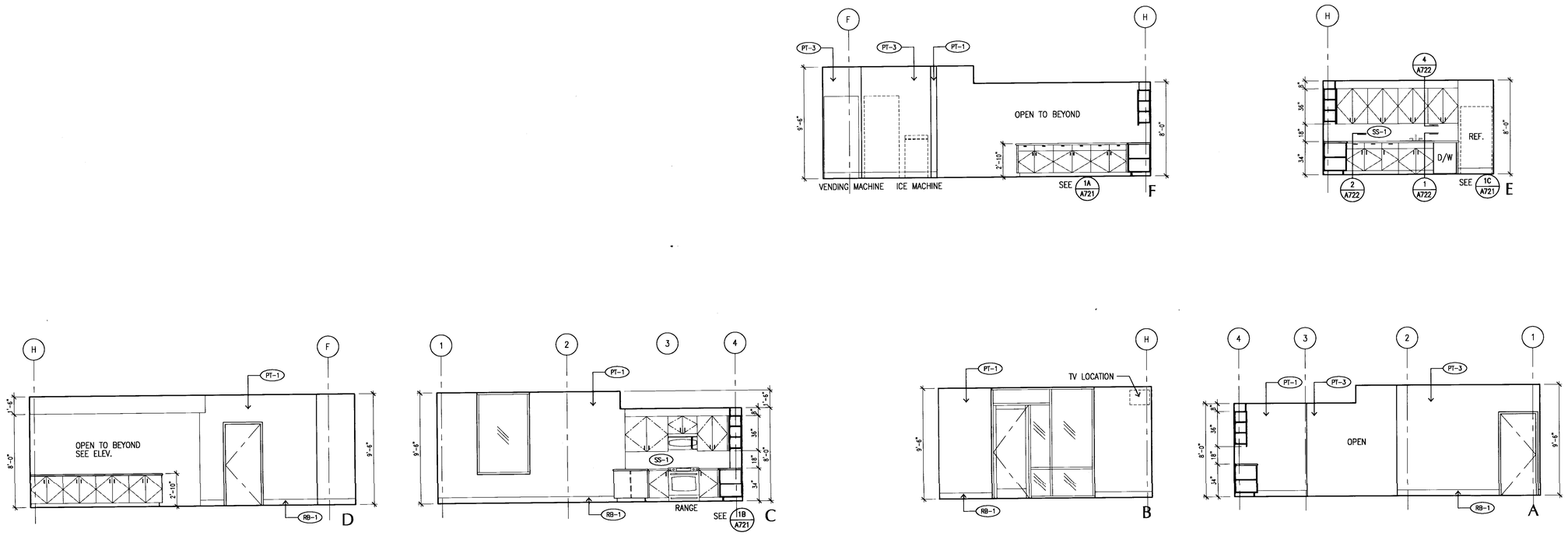

INTERIOR ELEVATIONS (BREAK ROOM # 108) 3

1/4"=1'-0"

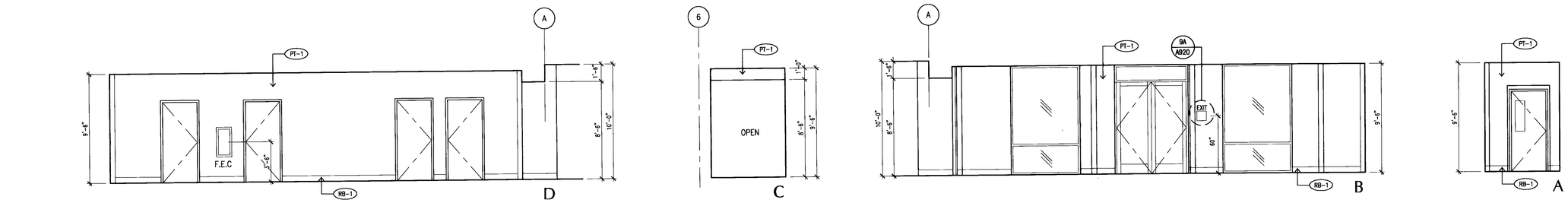

INTERIOR ELEVATIONS (HALL # 129) 2

1/4"=1'-0"

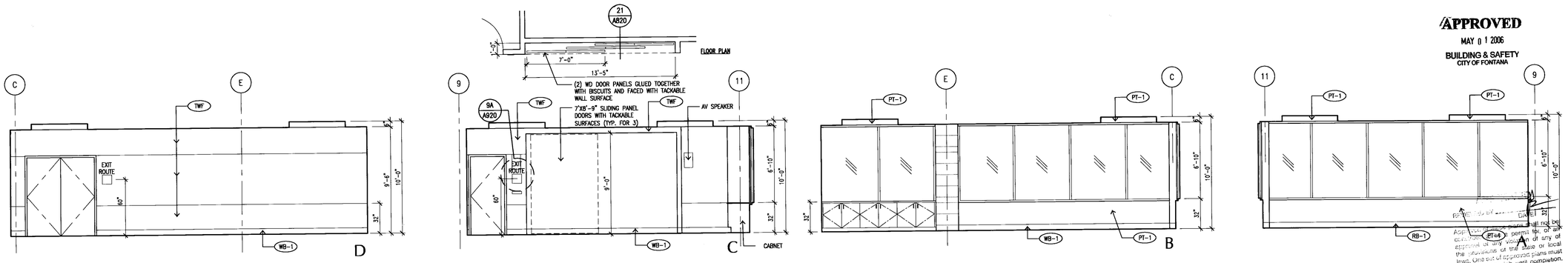

APPROVED
MAY 0 1 2006
BUILDING & SAFETY
CITY OF FONTANA

INTERIOR ELEVATIONS (CONFERENCE ROOM # 125) 1

1/4"=1'-0"

LANGDON WILSON
ARCHITECTURE
PLANNING
INTERIORS

18800 VON KARMAN AVENUE, SUITE 200
IRVINE, CALIFORNIA 92612-1517
949 - 833 - 9193

STRUCTURAL
KPFF 949 - 252 - 1022
MECHANICAL
TKSC 949 - 756 - 0565
ELECTRICAL
GLP 714 - 751 - 1851
LANDSCAPE
FRANK RADMACHER 714 - 832 - 1774
CIVIL ENGINEER
IKE CONSULTING 714 - 241 - 0606
AUDIO / VISUAL
VENEKLASEN ASSOCIATES 310 - 450 - 1733
DATA TELEPHONE
PLANNET CONSULTING 714 - 982 - 5800

CITY OF FONTANA
DEVELOPMENT SERVICES
ORGANIZATION BUILDING
8353 SIERRA AVENUE FONTANA, CALIFORNIA

REV.	DATE	ISSUED FOR	REV.	DATE	ISSUED FOR
	10-17-05	DD PACKAGE			
	12-05-05	PLAN CHECK			
	02-06-06	PC RESUBMIT.			
	04-17-06	PERMIT SET			
	04-17-06	BID SET			

Stamp

LICENSED ARCHITECT JOHN PATRICK AVERY NO. C7161 EXP. 03-31-07 STATE OF CALIFORNIA

DATE: 11/01/05 SCALE: 1/4"=1'-0"
DRAWN BY: SAW
JOB NO. L454-000 CADD TITLE: A712

SHEET TITLE
FIRST FLOOR
INTERIOR ELEVATIONS

SHEET NUMBER:
A712

©Copyright 2005 Langdon Wilson

PERMIT SET / BID SET 04-17-06

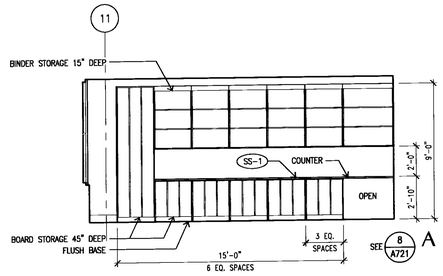

INTERIOR ELEVATIONS (CONF. SUPPORT # 124) 4

1/4"=1'-0"

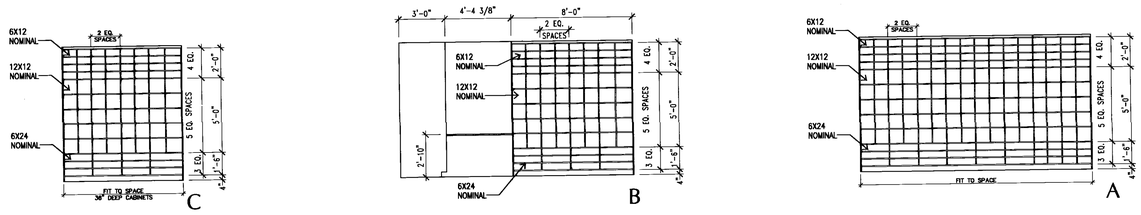

INTERIOR ELEVATIONS (STORAGE # 131) 2

1/4"=1'-0"

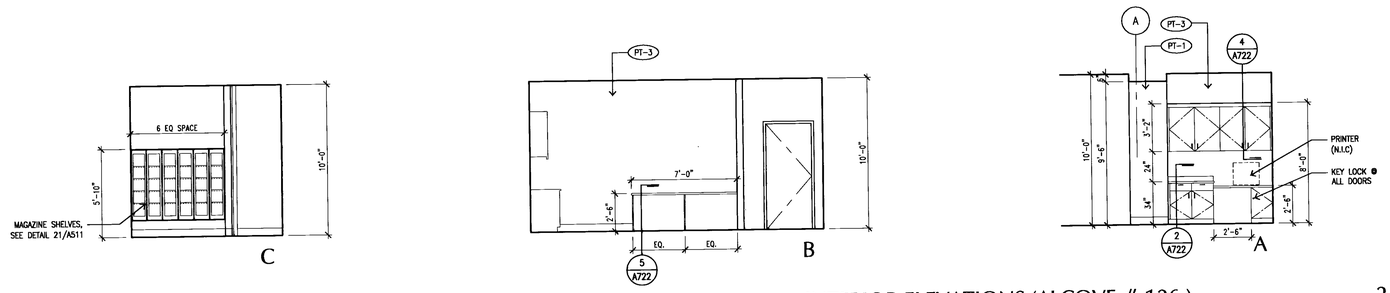

INTERIOR ELEVATIONS (ALCOVE # 126) 2

1/4"=1'-0"

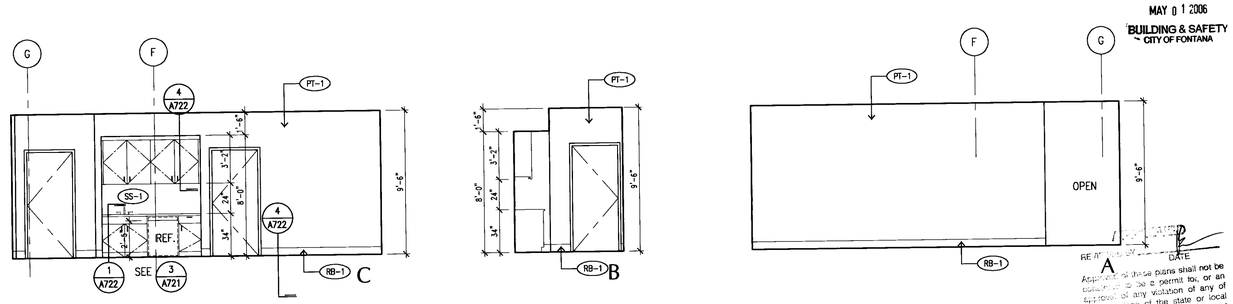

INTERIOR ELEVATIONS (HALL # 122) 1

1/4"=1'-0"

APPROVED
MAY 0 1 2006
BUILDING & SAFETY
CITY OF FONTANA

LANGDON WILSON
ARCHITECTURE
PLANNING
INTERIORS

18800 VON KARMAN AVENUE, SUITE 200
IRVINE, CALIFORNIA 92612-1517
949 - 833 - 9193

STRUCTURAL
KPFF 949 - 252 - 1022
MECHANICAL
TKSC 949 - 756 - 0565
ELECTRICAL
GLP 714 - 751 - 1851
LANDSCAPE
FRANK RADMACHER 714 - 832 - 1774
CIVIL ENGINEER
IKE CONSULTING 714 - 241 - 0606
AUDIO / VISUAL
VENEKLASEN ASSOCIATES 310 - 450 - 1733
DATA TELEPHONE
PLANNET CONSULTING 714 - 982 - 5800

CITY OF FONTANA
DEVELOPMENT SERVICES
ORGANIZATION BUILDING
8353 SIERRA AVENUE FONTANA, CALIFORNIA

REV.	DATE	ISSUED FOR	REV.	DATE	ISSUED FOR
	10-17-05	DD PACKAGE			
	12-05-05	PLAN CHECK			
	02-06-06	PC RESUBMIT.			
	04-17-06	PERMIT SET			
	04-17-06	BID SET			

Stamp

LICENSED ARCHITECT
JON PATRICK ALLEN
NO. C7181
REN. 03-31-07
STATE OF CALIFORNIA

DATE: 11/01/05 SCALE: 1/4"=1'-0"
DRAWN BY: SAM
JOB NO. L454-000 CADD TITLE: A713

SHEET TITLE:
FIRST FLOOR
INTERIOR ELEVATIONS

SHEET NUMBER:
A713

©Copyright 2005 Langdon Wilson

PERMIT SET / BID SET 04-17-06

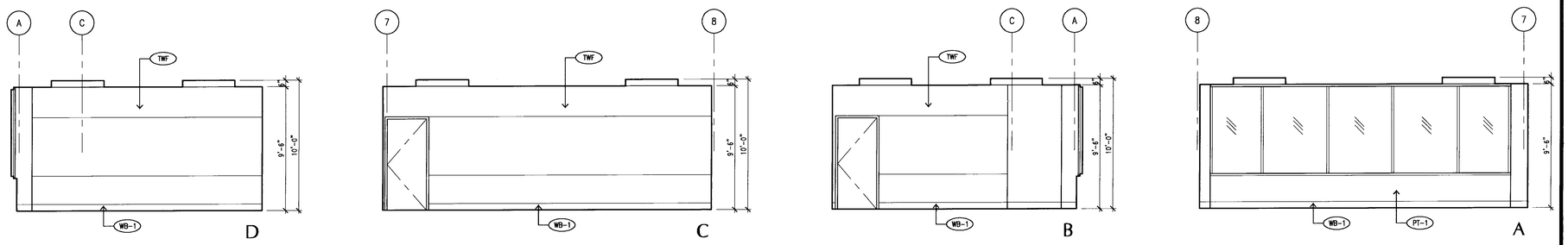

INTERIOR ELEVATION (CONFERENCE ROOM # 229) 3

1/4"=1'-0"

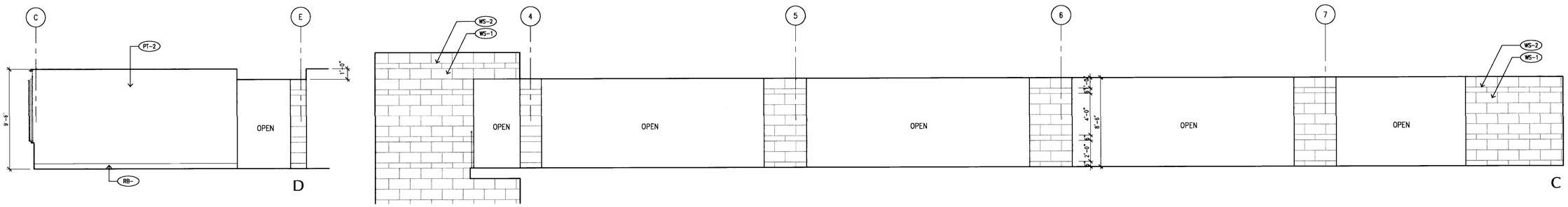

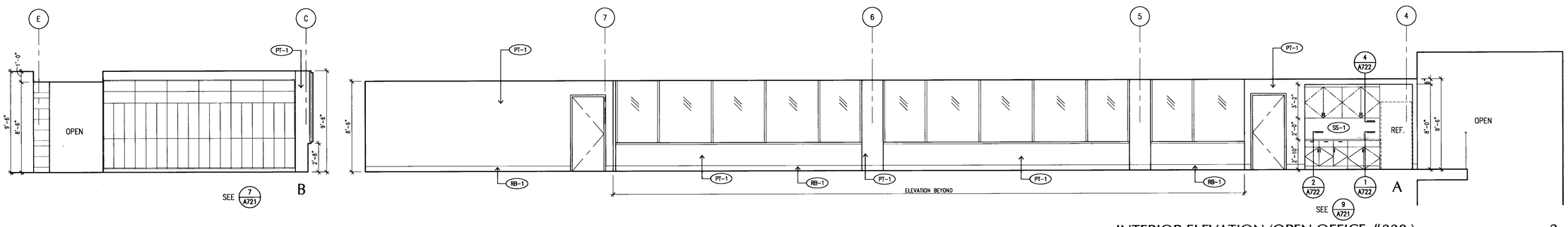

INTERIOR ELEVATION (OPEN OFFICE #228) 2

1/4"=1'-0"

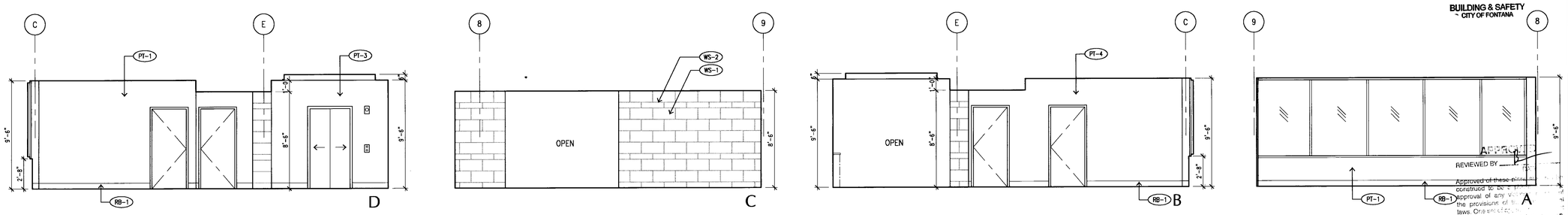

INTERIOR ELEVATION (RECEPTION / ELEVATOR LOBBY) 1

1/4"=1'-0"

APPROVED
MAY 0 1 2006
BUILDING & SAFETY
CITY OF FONTANA

REVIEWED BY

Approved of these plans ... construed to be a ... approval of any ... the provisions of ... laws. One set of ... be kept on the ...

LANGDON WILSON
ARCHITECTURE
PLANNING
INTERIORS

18800 VON KARMAN AVENUE, SUITE 200
IRVINE, CALIFORNIA 92612-1517
949 - 833 - 9193

STRUCTURAL
KPFF 949 - 252 - 1022
MECHANICAL
TKSC 949 - 756 - 0565
ELECTRICAL
GLP 714 - 751 - 1851
LANDSCAPE
FRANK RADMACHER 714 - 832 - 1774
CIVIL ENGINEER
IKE CONSULTING 714 - 241 - 0606
AUDIO / VISUAL
VENEKLASEN ASSOCIATES 310 - 450 - 1733
DATA TELEPHONE
PLANNET CONSULTING 714 - 982 - 5800

CITY OF FONTANA

DEVELOPMENT SERVICES
ORGANIZATION BUILDING

8353 SIERRA AVENUE FONTANA, CALIFORNIA

REV.	DATE	ISSUED FOR	REV.	DATE	ISSUED FOR
	10-17-05	DD PACKAGE			
	12-05-05	PLAN CHECK			
	02-06-06	PC RESUBMIT.			
	04-17-06	PERMIT SET			
	04-17-06	BID SET			

Stamp

LICENSED ARCHITECT
JON PATRICK ALLEN
NO. C7181
REN. 03-31-07
STATE OF CALIFORNIA

DATE: 11/01/05 SCALE: 1/4"=1'-0"
DRAWN BY: SAM
JOB NO. L454-000 CADD TITLE: A714

SHEET TITLE:
SECOND FLOOR
INTERIOR ELEVATIONS

SHEET NUMBER:
A714

©Copyright 2005 Langdon Wilson

PERMIT SET / BID SET 04-17-06

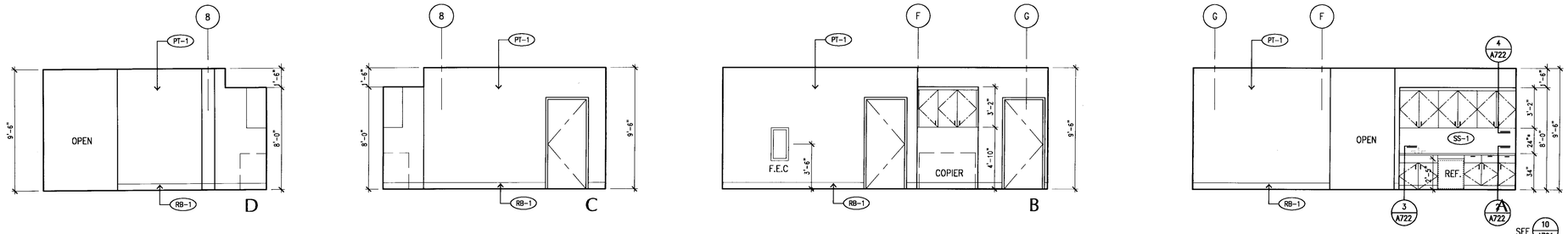

* VERIFY CLEARANCE W/ OWNER FOR COFFEE MAKER

INTERIOR ELEVATION (HALL # 212) 2

1/4"=1'-0"

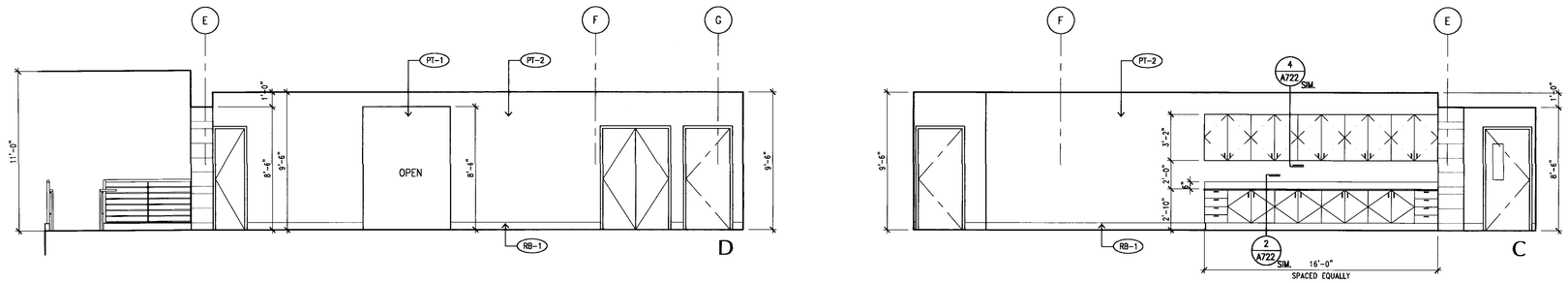

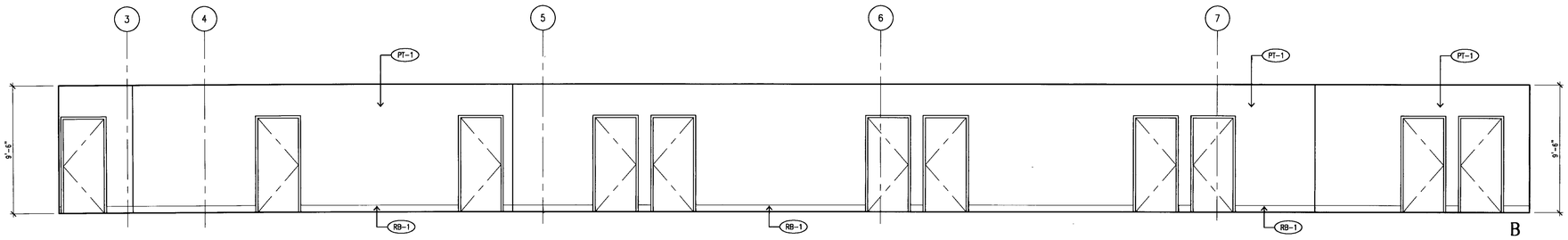

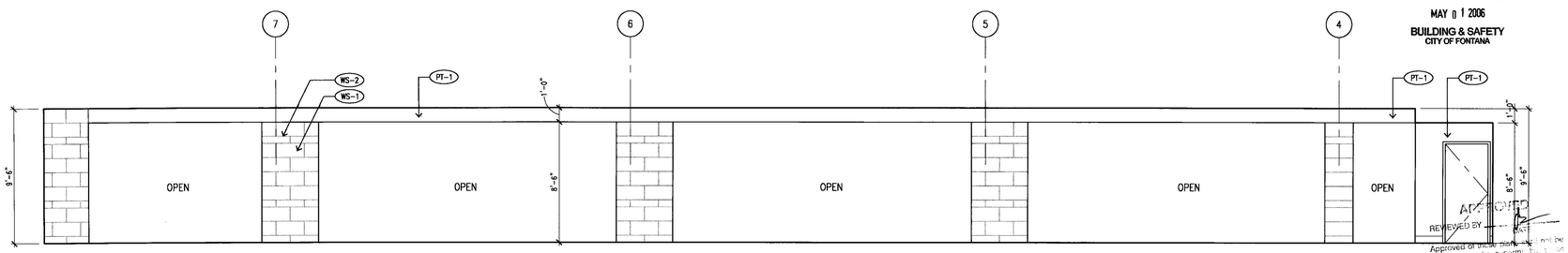

APPROVED
MAY 01 2006
BUILDING & SAFETY
CITY OF FONTANA

REVIEWED BY

Approved of these plans does not permit to be constructed in violation of any ordinance or state law or approval of any violation of any of the provisions of the building ordinances or state laws. One set of approved plans shall be kept on the job site at all times during construction.
WILLDAN

INTERIOR ELEVATION (OPEN OFFICE # 230) 1

1/4"=1'-0"

LANGDON WILSON
ARCHITECTURE
PLANNING
INTERIORS

18800 VON KARMAN AVENUE, SUITE 200
IRVINE, CALIFORNIA 92612-1517
949 - 833 - 9193

STRUCTURAL
KPFF 949 - 252 - 1022
MECHANICAL
TISC 949 - 756 - 0565
ELECTRICAL
GLP 714 - 751 - 1851
LANDSCAPE
FRANK RADMACHER 714 - 832 - 1774
CIVIL ENGINEER
IKE CONSULTING 714 - 241 - 0606
AUDIO / VISUAL
VENEKLASEN ASSOCIATES 310 - 450 - 1733
DATA TELEPHONE
PLANNET CONSULTING 714 - 982 - 5800

CITY OF FONTANA
DEVELOPMENT SERVICES ORGANIZATION BUILDING

8353 SIERRA AVENUE FONTANA, CALIFORNIA

CITY OF FONTANA CALIFORNIA

REV.	DATE	ISSUED FOR	REV.	DATE	ISSUED FOR
	10-17-05	DD PACKAGE			
	12-05-05	PLAN CHECK			
	02-06-06	PC RESUBMIT.			
	04-17-06	PERMIT SET			
	04-17-06	BID SET			

Stamp

LICENSED ARCHITECT
GARY PATRICK KEEFE
No. C7187
EXPIRES 03-31-07
STATE OF CALIFORNIA

DATE: 11/01/05 SCALE: 1/4"=1'-0"
DRAWN BY: SAW
JOB NO. L454-000 CADD TITLE: A715

SHEET TITLE:
SECOND FLOOR INTERIOR ELEVATIONS

SHEET NUMBER:
A715

©Copyright 2005 Langdon Wilson

PERMIT SET / BID SET 04-17-06

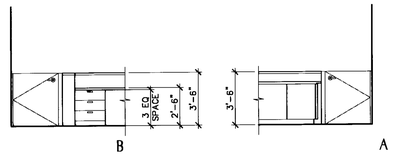

FRONT COUNTER ELEVATION 4

1/4"=1'-0"

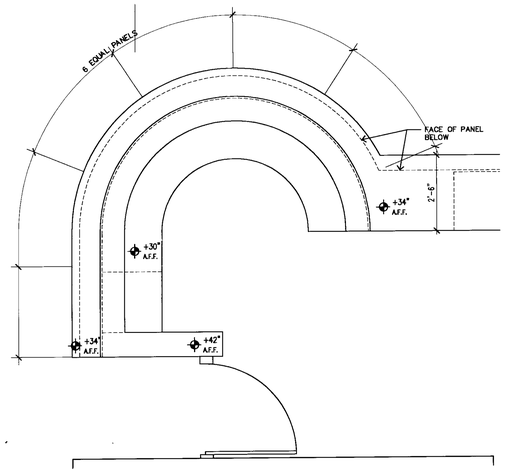

ENLARGED FRONT COUNTER PLAN 3

1/2"=1'-0"

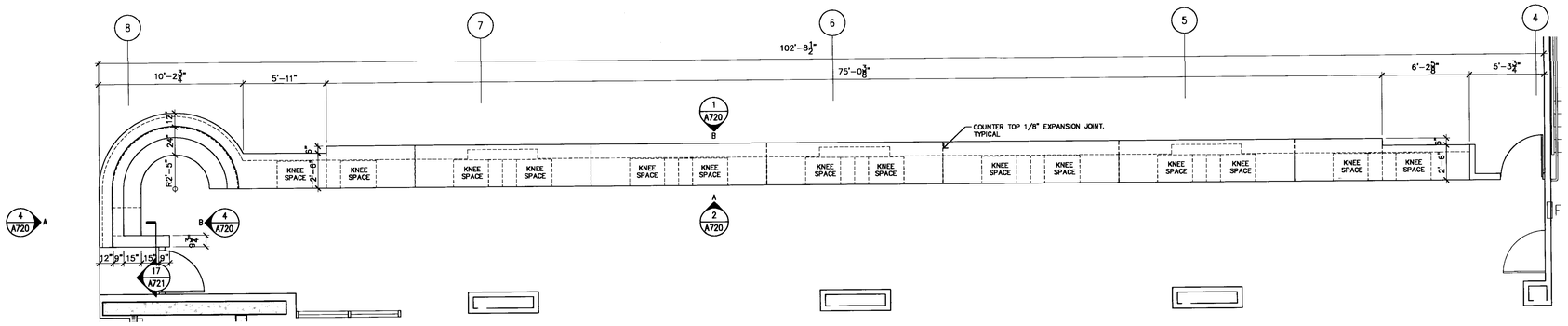

FRONT COUNTER PLAN 3

1/4"=1'-0"

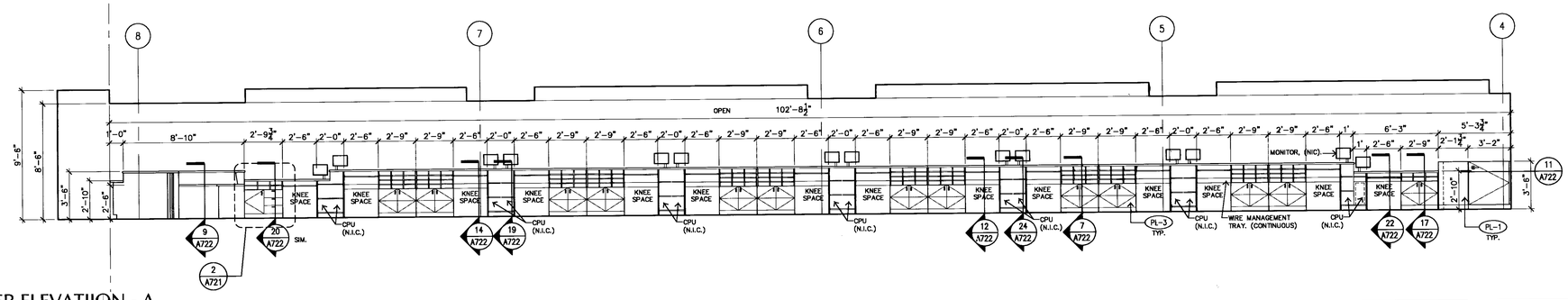

FRONT COUNTER ELEVATIION - A 2

1/4"=1'-0"

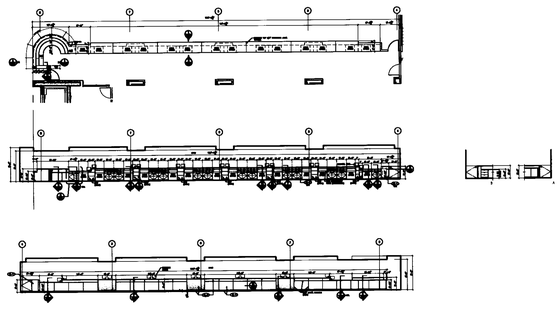

FRONT COUNTER ELEVATION - B 1

1/4"=1'-0"

APPROVED
MAY 11 2006
BUILDING & SAFETY
CITY OF FONTANA

APPROVED
REVIEWED BY _____ DATE

Approved of these plans shall not be construed to be a permit to, or an approval of, any violation of any of the provisions of the [illegible] Code or of any other ordinance of the City of Fontana. [illegible]

LANGDON WILSON
ARCHITECTURE
PLANNING
INTERIORS

18800 VON KARMAN AVENUE, SUITE 200
IRVINE, CALIFORNIA 92612-1517
949 - 833 - 9793

STRUCTURAL
KPFF 949 - 252 - 1022
MECHANICAL
TKSC 949 - 756 - 0565
ELECTRICAL
GLP 714 - 751 - 1851
LANDSCAPE
FRANK RADMACHER 714 - 832 - 1774
CIVIL ENGINEER
IKE CONSULTING 714 - 241 - 0606
AUDIO / VISUAL
VENEKLASEN ASSOCIATES 310 - 450 - 1733
DATA TELEPHONE
PLANNET CONSULTING 714 - 982 - 5800

CITY OF FONTANA

DEVELOPMENT SERVICES ORGANIZATION BUILDING

8353 SIERRA AVENUE FONTANA, CALIFORNIA

REV.	DATE	ISSUED FOR	REV.	DATE	ISSUED FOR
	08-12-05	SCHEMATICS			
	10-17-05	DD PACKAGE			
	12-05-05	PLAN CHECK			
	02-06-06	PC RESUBMIT.			
	04-17-06	PERMIT SET			
	04-17-06	BID SET			

Stamp

LICENSED ARCHITECT JOHN PATRICK KELLER NO. C7181 REN. 03-31-07 STATE OF CALIFORNIA

DATE: 11/01/05 SCALE: 1/4" = 1'-0"

DRAWN BY: SCT

JOB NO. L454-000 CADD TITLE: A720

SHEET TITLE:

CASEWORK ELEVATIONS

SHEET NUMBER:

A720

©Copyright 2005 Langdon Wilson

PERMIT SET / BID SET 04-17-06

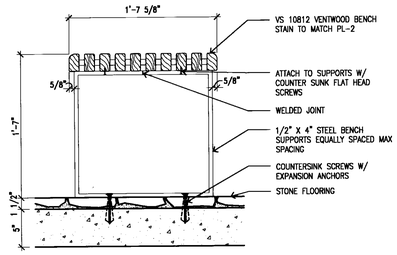

BENCH DETAIL 15

DE\MW-26 1 1/2" = 1'-0"

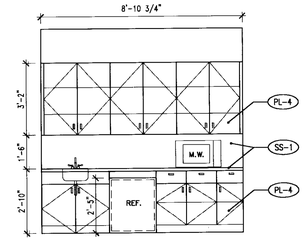

COFFEE - BY ROOM 212 10

3/8" = 1'-0"

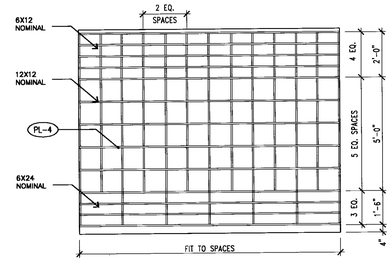

PC PLAN STORAGE 5

3/8" = 1'-0"

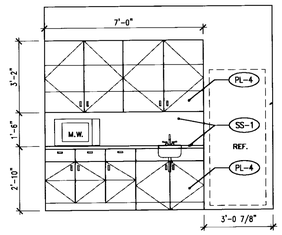

COFFEE - BY ROOM 230 9

3/8" = 1'-0"

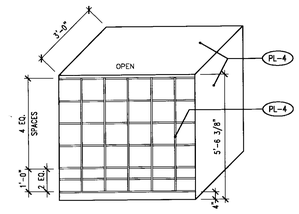

PC PROCESSING 4

3/8" = 1'-0"

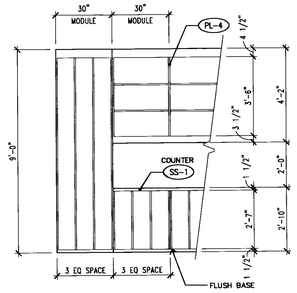

DAB REFERENCE 8

3/8" = 1'-0"

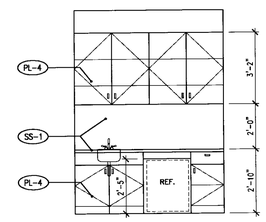

COFFEE - BY ROOM 122 3

3/8" = 1'-0"

① SOLID SURFACE COUNTER TOPS W/ BULLNOSE EDGE

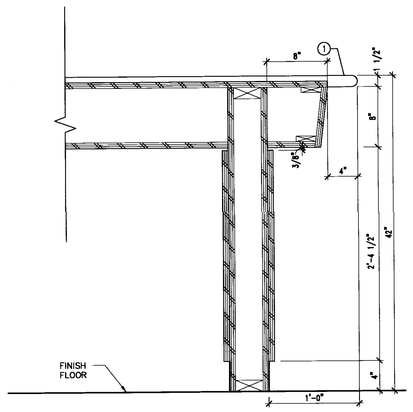

WORK COUNTER @ ALCOVE 18

DE\MW-25B 1 1/2" = 1'-0"

① SOLID SURFACE COUNTER TOPS W/ BULLNOSE EDGE SS-1

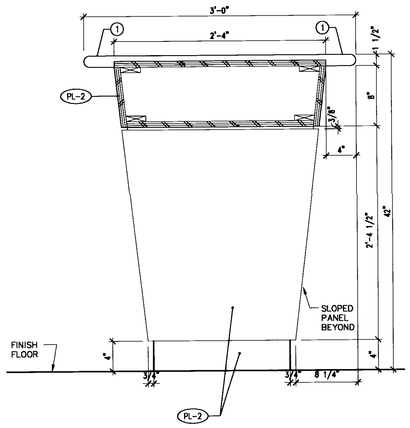

WORK COUNTER @ ALCOVE 13

DE\MW-25A 1 1/2" = 1'-0"

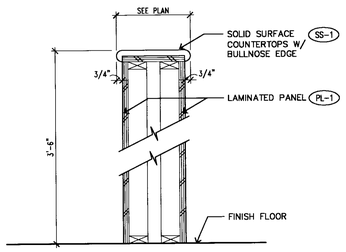

LOW WALL 17

DE\MW-29 1 1/2" = 1'-0"

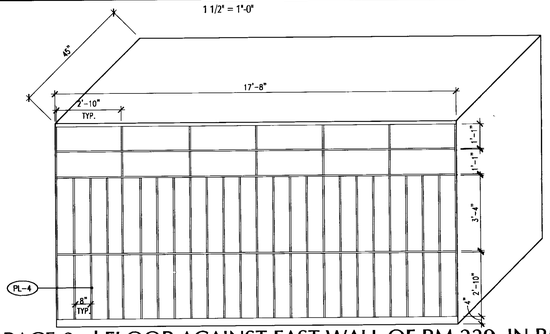

EXHIBIT STORAGE-2nd FLOOR AGAINST EAST WALL OF RM.229, IN RM. 228 7

3/8" = 1'-0"

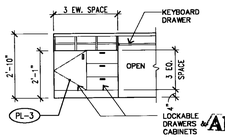

CASHIER 2

3/8" = 1'-0"

APPROVED
MAY 01 2006
BUILDING & SAFETY
CITY OF FONTANA

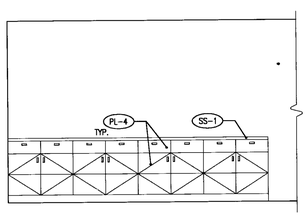

D

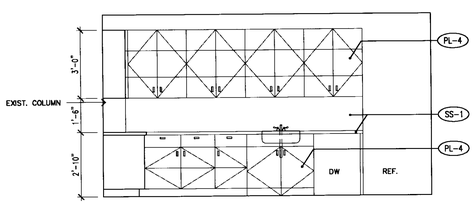

C

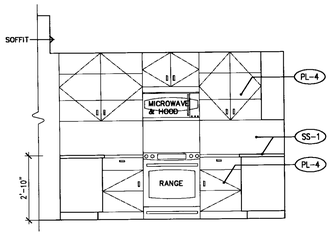

B

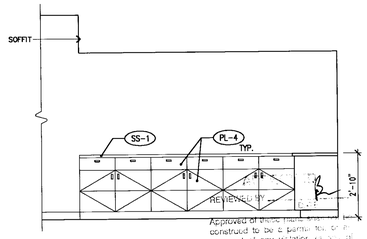

A

Approved of these plans is not to be construed to be a permit to violate any provisions of the state or local laws. One set of approved plans must be kept on the job until completion.
WILLDAN

BREAK ROOM - 108 1

3/8" = 1'-0"

LANGDON WILSON
ARCHITECTURE
PLANNING
INTERIORS

18800 VON KARMAN AVENUE, SUITE 200
IRVINE, CALIFORNIA 92612-1517
949 - 833 - 9193

STRUCTURAL
KPFF 949 - 252 - 1022
MECHANICAL
TISC 949 - 756 - 0565
ELECTRICAL
GLP 714 - 751 - 1851
LANDSCAPE
FRANK RADMACHER 714 - 832 - 1774
CIVIL ENGINEER
IKE CONSULTING 714 - 241 - 0606
AUDIO / VISUAL
VENEKLASEN ASSOCIATES 310 - 450 - 1733
DATA TELEPHONE
PLANNET CONSULTING 714 - 982 - 5800

CITY OF FONTANA

DEVELOPMENT SERVICES
ORGANIZATION BUILDING

8353 SIERRA AVENUE FONTANA, CALIFORNIA

CITY OF FONTANA CALIFORNIA

REV.	DATE	ISSUED FOR	REV.	DATE	ISSUED FOR
	08-12-05	SCHEMATICS			
	10-17-05	DD PACKAGE			
	12-05-05	PLAN CHECK			
	02-06-06	PC RESUBMIT.			
	04-17-06	PERMIT SET			
	04-17-06	BID SET			

Stamp

LICENSED ARCHITECT JON PATRICK ALLEN NO. C7181 EXPIRES 03-31-07 STATE OF CALIFORNIA

DATE: 11/01/05 SCALE: AS SHOWN
DRAWN BY: SCT
JOB NO. L454-000 CADD TITLE: A721

SHEET TITLE:
CASEWORK ELEVATIONS

SHEET NUMBER:
A721

©Copyright 2005 Langdon Wilson

PERMIT SET / BID SET 04-17-06

① PROVIDE WIRE MOLD DUAL COMPARTMENT RACE WAY FOR TEL/DATA CABLING & POWER LINK W/ CONDUIT IN NON-ACCESSABLE AREAS – PER ELECTRICAL DRAWINGS

② SOLID SURFACE COUNTER TOPS SS-1 W/ BULLNOSE EDGE

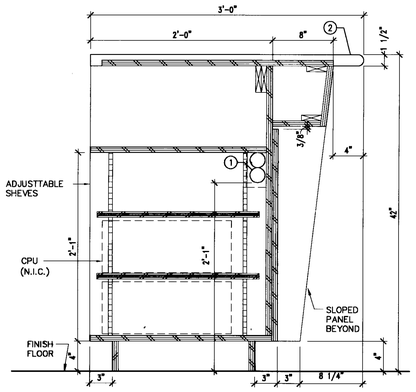

FRONT COUNTER @ CPU SPACE 24

DE\MW-24 1 1/2" = 1'-0"

① PROVIDE WIRE MOLD DUAL COMPARTMENT RACE WAY FOR TEL/DATA CABLING & POWER LINK W/ CONDUIT IN NON-ACCESSABLE AREAS – PER ELECTRICAL DRAWINGS

② SOLID SURFACE COUNTER TOPS SS-1 W/ BULLNOSE EDGE

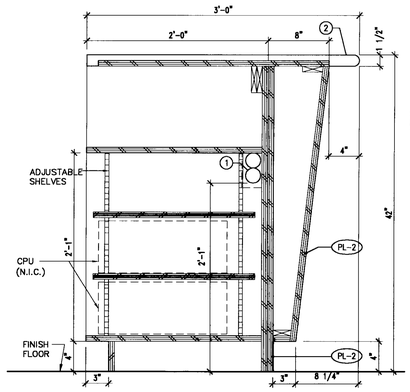

FRONT COUNTER @ CPU SPACE 19

DE\MW-19 1 1/2" = 1'-0"

① PROVIDE WIRE MOLD DUAL COMPARTMENT RACE WAY FOR TEL/DATA CABLING & POWER LINK W/ CONDUIT IN NON-ACCESSABLE AREAS – PER ELECTRICAL DRAWINGS

② SOLID SURFACE COUNTER TOPS SS-1 W/ BULLNOSE EDGE

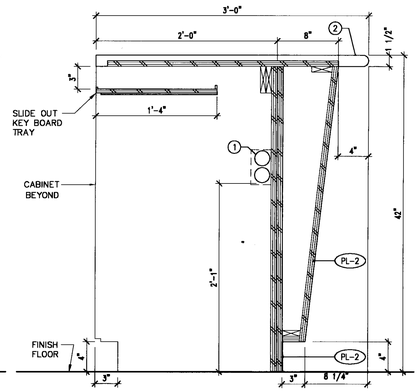

FRONT COUNTER @ KNEE SPACE 14

DE\MW-14 1 1/2" = 1'-0"

① PROVIDE WIRE MOLD DUAL COMPARTMENT RACE WAY FOR TEL/DATA CABLING & POWER LINK W/ CONDUIT IN NON-ACCESSABLE AREAS – PER ELECTRICAL DRAWINGS

② SOLID SURFACE COUNTER TOPS SS-1 W/ BULLNOSE EDGE

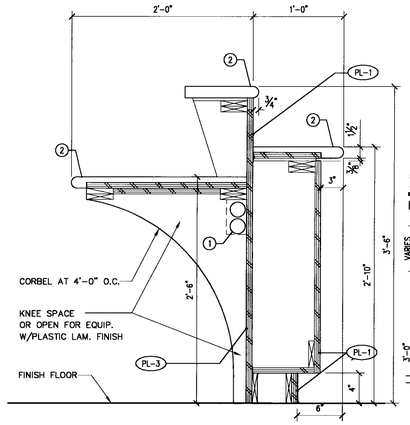

FRONT COUNTER @ KNEE SPACE 9

DE\MW-09 1 1/2" - 1'-0"

① PROVIDE WIRE MOLD DUAL COMPARTMENT RACE WAY FOR TEL/DATA CABLING & POWER LINK W/ CONDUIT IN NON-ACCESSABLE AREAS – PER ELECTRICAL DRAWINGS

② SOLID SURFACE COUNTER TOPS SS-1 W/ BULLNOSE EDGE

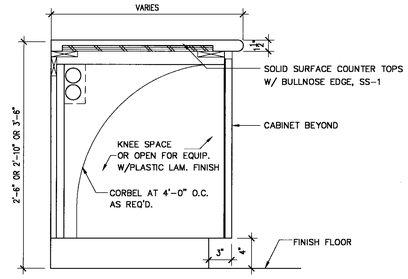

BASE CABINET @ KNEE SPACE 5

DE\MW-05 1 1/2" = 1'-0"

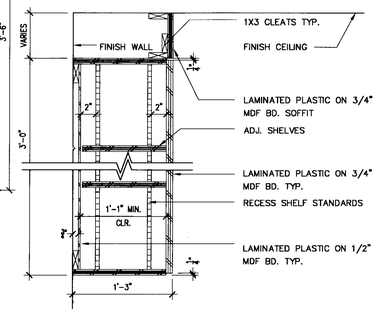

TYPICAL UPPER CABINET 4

DE\MW-04 1 1/2" - 1'-0"

① PROVIDE WIRE MOLD DUAL COMPARTMENT RACE WAY FOR TEL/DATA CABLING & POWER LINK W/ CONDUIT IN NON-ACCESSABLE AREAS – PER ELECTRICAL DRAWINGS

② SOLID SURFACE COUNTER TOPS SS-1 W/ BULLNOSE EDGE

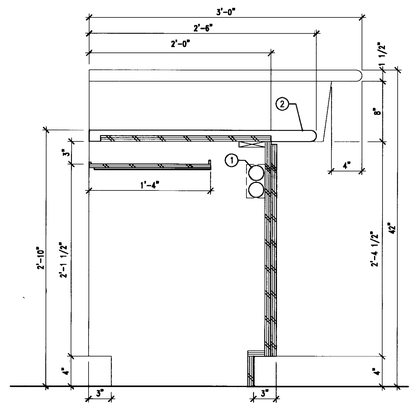

ACCESSIBLE COUNTER 22

DE\MW-22 1 1/2" = 1'-0"

① PROVIDE WIRE MOLD DUAL COMPARTMENT RACE WAY FOR TEL/DATA CABLING & POWER LINK W/ CONDUIT IN NON-ACCESSABLE AREAS – PER ELECTRICAL DRAWINGS

② SOLID SURFACE COUNTER TOPS SS-1 W/ BULLNOSE EDGE

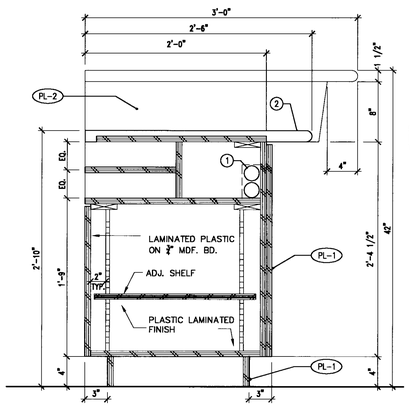

ACCESSIBLE COUNTER 17

DE\MW-17 1 1/2" = 1'-0"

① PROVIDE WIRE MOLD DUAL COMPARTMENT RACE WAY FOR TEL/DATA CABLING & POWER LINK W/ CONDUIT IN NON-ACCESSABLE AREAS – PER ELECTRICAL DRAWINGS

② SOLID SURFACE COUNTER TOPS SS-1 W/ BULLNOSE EDGE

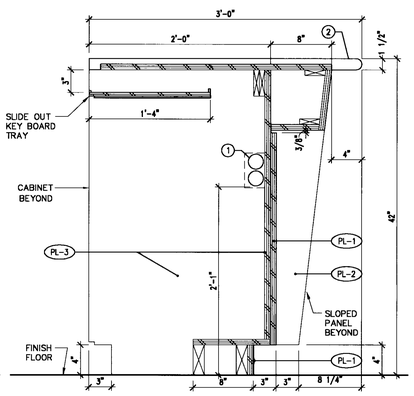

FRONT COUNTER @ KNEE SPACE 12

DE\MW-12 1 1/2" = 1'-0"

① PROVIDE WIRE MOLD DUAL COMPARTMENT RACE WAY FOR TEL/DATA CABLING & POWER LINK W/ CONDUIT IN NON-ACCESSABLE AREAS – PER ELECTRICAL DRAWINGS

② SOLID SURFACE COUNTER TOPS SS-1 W/ BULLNOSE EDGE

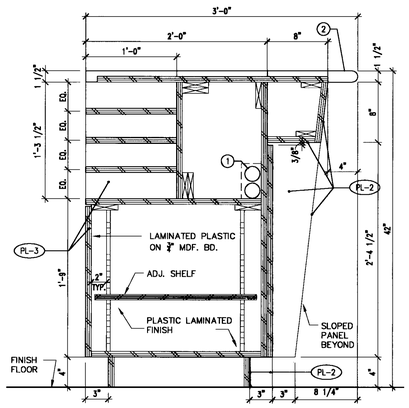

FRONT COUNTER @ STORAGE SP. 7

DE\MW-07 1 1/2" = 1'-0"

① PROVIDE WIRE MOLD DUAL COMPARTMENT RACE WAY FOR TEL/DATA CABLING & POWER LINK W/ CONDUIT IN NON-ACCESSABLE AREAS – PER ELECTRICAL DRAWINGS

② SOLID SURFACE COUNTER TOPS SS-1 W/ BULLNOSE EDGE

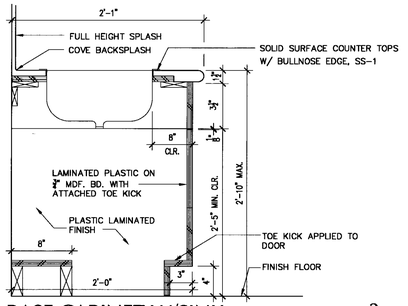

BASE CABINET W/SINK 3

DE\MW-03 1 1/2" = 1'-0"

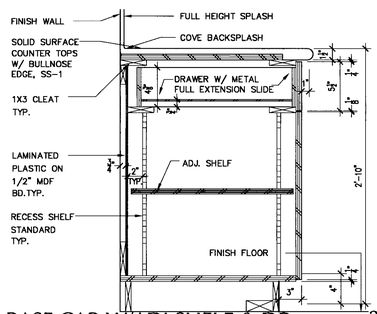

BASE CAB W/ADJ SHELF & DR 2

DE\MW-02 1 1/2" = 1'-0"

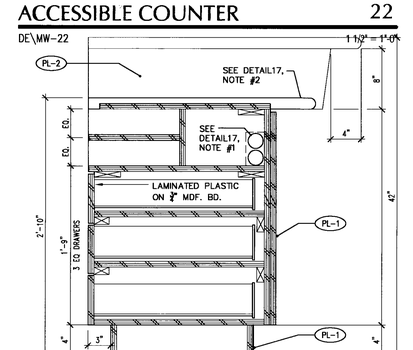

ACCESSIBLE COUNTER 20

DE\MW-17A 1 1/2" = 1'-0"

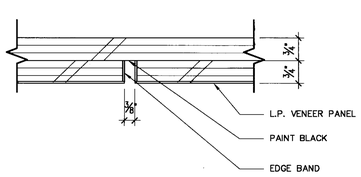

REVEAL DETAIL 16

DE\MW-16 6" = 1'-0"

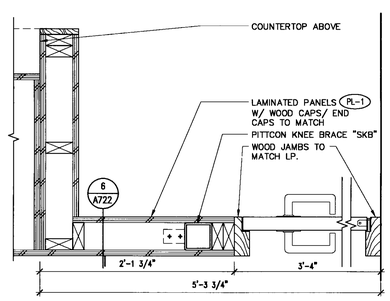

ACCESSIBLE COUNTER GATE 11

DE\MW-11 1 1/2" = 1'-0"

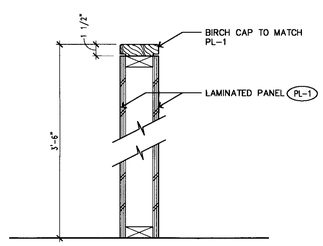

LOW WALL 6

DE\MW-28 1 1/2" = 1'-0"

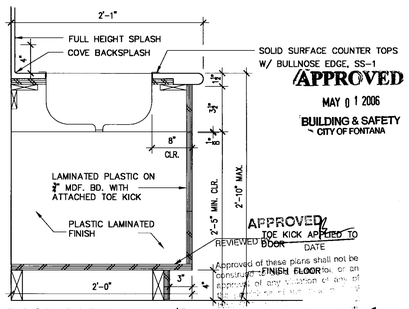

APPROVED
MAY 01 2006
BUILDING & SAFETY
CITY OF FONTANA

APPROVED
REVIEWED BY DATE

Approval of these plans shall not be construed to permit or an approval of any violation of any ordinance or law.

BASE CABINET W/SINK 1

DE\MW-03A 1 1/2" = 1'-0"

LANGDON WILSON
ARCHITECTURE
PLANNING
INTERIORS

18800 VON KARMAN AVENUE, SUITE 200
IRVINE, CALIFORNIA 92612-1517
949 - 833 - 9193

STRUCTURAL
KPFF 949 - 252 - 1022
MECHANICAL
TKSC 949 - 756 - 0565
ELECTRICAL
GLP 714 - 751 - 1851
LANDSCAPE
FRANK RADMACHER 714 - 832 - 1774
CIVIL ENGINEER
IKE CONSULTING 714 - 241 - 0606
AUDIO / VISUAL
VENEKLASEN ASSOCIATES 310 - 450 - 1733
DATA TELEPHONE
PLANNET CONSULTING 714 - 982 - 5800

CITY OF FONTANA
DEVELOPMENT SERVICES
ORGANIZATION BUILDING
8353 SIERRA AVENUE FONTANA, CALIFORNIA

REV.	DATE	ISSUED FOR	REV.	DATE	ISSUED FOR
	12-05-05	PLAN CHECK			
	02-06-06	PC RESUBMIT.			
	04-17-06	PERMIT SET			
	04-17-06	BID SET			

Stamp

LICENSED ARCHITECT JOHN PATRICK FLEEN NO. C7181 Exp. 03-31-07 STATE OF CALIFORNIA

DATE: SCALE: AS SHOWN
DRAWN BY:
JOB NO. L454-000 CADD TITLE: A722

SHEET TITLE:
CASEWORK DETAIL

SHEET NUMBER:
A722

©Copyright 2005 Langdon Wilson

PERMIT SET / BID SET 04-17-06

FINISH & MATERIALS SCHEDULE

SYM.	ITEM	MANUF.	SPEC.	COLOR	REMARKS
ACT-1	ACOUSTIC CEILING TILE	ARMSTRONG	OPTIMA OPEN PLAN TEGULAR 24"X24"X1½" AND 24"X24"X 1½" FIBERGLASS CEILING TILE WITH FOIL BACKER	ALTERNATE: CHICAGO METALLIC– SIERRA "F" WITH FOIL BACKER	ARMSTRONG – SILHOUETTE XL 9⁄16" GRID CHICAGO METALLIC – ULTRALINE 3500 GRID
ACT-2	ACOUSTIC CEILING TILE	ARMSTRONG	ULTIMA BEVELED TEGULAR 24"X24"X¾" MINERAL FIBER CEILING TILE	ALTERNATE: CHICAGO METALLIC– SIERRA "M"	ARMSTRONG – SILHOUETTE XL 9⁄16" GRID CHICAGO METALLIC – ULTRALINE 3500 GRID
ACT-3	ACOUSTIC CEILING TILE	ARMSTRONG	OPTIMA OPEN PLAN TEGULAR 12"X24"X1½" AND 12"X24"X 1½" FIBERGLASS CEILING TILE WITH FOIL BACKER	ALTERNATE: CHICAGO METALLIC– SIERRA "F" WITH FOIL BACKER	ARMSTRONG – SILHOUETTE XL 9⁄16" GRID CHICAGO METALLIC – ULTRALINE 3500 GRID
CPT-1	CARPET TILE – OFFICE	INTERFACE	NIKKO NI #2592	PAGODA	
CPT-2	CARPET TILE – LOBBY	INTERFACE	KAMALA NI #2592	PAGODA	
CPT-3	CARPET TILE –(BROADROOM) STAIRS	INTERFACE	KAMALA NI #2592	PAGODA	
CS	CONCRETE, SEALED				
CT-1	CERAMIC TILE – FLOOR	DALTILE	#156		2"X2" TILE
CT-2	CERAMIC TILE – WALL	DALTILE	#317		2"X2" TILE
CT-3	CERAMIC TILE – WALL ACCENT	DALTILE GLASS	#GR03	SERENE GREEN	GLASS TILE
FRP-1	FIBER REINFORCED PLASTIC				
GL-1	VISION GLASS	VIRACON	VE3-2M	GREY	INSULATING UNITS
GL-2	SPANDREL GLASS	VIRACON	VE3-2M*	GREY	* W/ VIRASPAN COATING ON #4 SURFACE INSULATING UNITS
GL-3	ENTRY GLASS	VIRACON	VE1-2M	CLEAR	INSULATING UNITS
PL-1	PLASTIC LAMINATE – FRONT DESK	FORMICA	#4400	BIRCH	
PL-2	PLASTIC LAMINATE – FRONT DESK	FORMICA	#4267	CHERRY ALLEGRO	
PL-3	PLASTIC LAMINATE – FRONT DESK	FORMICA	#3508-58	TATAMI MAT	
PL-4	PLASTIC LAMINATE – COFFEE BARS	FORMICA	#7215-58	EARTHEN TERRA	
PL-5	PLASTIC LAMINATE – ELEVATOR CAB	WILSONART	#7921-38	TUSCAN WALNUT	
PT-1	PAINT – FIELD	FRAZEE	#CW025W	RESTORATIVE	
PT-2	PAINT – ACCENT	FRAZEE	#8584M	GREY EXPECTATIONS	
PT-3	PAINT – ACCENT	FRAZEE	#7805A	COPPER GOLD	
PT-4	PAINT – EXPOSED METAL	FRAZEE	#8805B	STONINGTON	
PTE-1	EXTERIOR PAINT (FIELD)	FRAZEE	#8701W	SOFTLY CHIMING	
PTE-2	EXTERIOR PAINT (ACCENT)	FRAZEE	#8703M	ROCKBRIDGE	
RB-1	RUBBER BASE	JOHNSONITE	#47	BROWN	
RB-2	RUBBER COVER	ENDURA	#37	FOG	STAIR TREADS WITH NOSINGS & HC WARNING STRIPE
SS-1	SOLID SURFACE (COUNTERTOP)	AVONITE FOUNDATIONS	#F1-9058	RIVER MOSS	
ST-1	STONE (FLOORING)	ROX	FLAGSTONE PAVING	AUTUMN HORIZON	DISTRIBUTED BY VALLEY BUILDING MATERIALS (949) 598-0256
SL-1	LINOLEUM (SHEET)	FORBO MARMOLEUM	REAL AUTHENTIC #3146	SERENE GREY	
SL-2	LINOLEUM (SHEET)	FORBO MARMOLEUM	REAL #3142	UMBRA	
SL-3	LINOLEUM (SHEET)	LONSEAL	LONECO #215	SEA COAST	OVER LONSAFE #SF50
SL-4	STAIR TREADS	ENDURA	#37	FOG	STAIR TREADS W/ NOSING & HC WARNING STRIPE
TPN-1	TOILET ROOM PARTITION	TRESPA	ATHLON SOLID PHENOLIC	MC-3/QZ POLAR	
WB-1	WOOD BASE	–	3/4" X 4"	PAINTED	
WC-1	WALL COVERING				
WD	WOOD DOORS	–		CHERRY	CHERRY TO MATCH PL-2 LAMINATE
WS-1	WALL STONE – FIELD	ERGON	DORATO 12"X24"		
WS-2	WALL STONE	ERGON	GRIGIO 6"X24"	RULLATO FINISH	
TWF	TACKABLE WALL	FABRICMATE	1/2" FLAMETACK BD.	* TO BE SELECTED	FABRIC FROM PRICE GROUP 'B'

ROOM FINISH SCHEDULE

NO.	ROOM NAME	WALLS NORTH MAT.	NORTH FIN.	EAST MAT.	EAST FIN.	SOUTH MAT.	SOUTH FIN.	WEST MAT.	WEST FIN.	FLOOR	BASE	CEILING	CLG HGT	REMARKS
FIRST FLOOR														
100	ENTRANCE LOBBY	GB/GL	PT-1		OPEN	GB	WS-1/WS-2	GB	PT-4	ST-1	RB-1	PT-1	+11'-0"	SEE CEILING PLAN
101	ELEVATOR LOBBY	GB	WS-1/WS-2	GB	PT-3	GB	PT-1	GB	PT-1	ST-1	RB-1	ACT-1/PT-1	VARIES	SEE CEILING PLAN
102	PUBLIC COUNTER	GB/GL	PT-1	GB	PT-1	GB	WS-1/WS-2	GB	PT-1	ST-1	RB-1	ACT-1/PT-1	VARIES	
103	OPEN OFFICE	GB	PT-1/WS-1,2	GB	PT-2/PT-1	GB/GL	PT-1	GB	PT-2/PT-1	CPT-1	RB-1	ACT-1/ACT-3	+9'-6"	SEE CEILING PLAN
104	WOMEN'S TOILET	GB	PT-1/CT-2	GB	PT-1/CT-2	GB	PT-1/CT-2	GB	PT-1/CT-2	CT-1	CT-2	PT-1	VARIES	COVE BASE
105	MEN'S TOILET	GB	PT-1/CT-2	GB	PT-1/CT-2	GB	PT-1/CT-2	GB	PT-1/CT-2	CT-1	CT-2	PT-1	VARIES	COVE BASE
106	VENDING AREA	GB	PT-3	GB	PT-3	GB	PT-1	GB	PT-1	SL-1	RB-1	ACT-2	+9'-6"	
107	ELECT. PANEL CLOSET	GB	PT-1	GB/GL	PT-1	GB	PT-1	GB	PT-1	CS	RB-1	O.T.S.	O.T.S	
108	LOUNGE ROOM	GB	PT-3	GB	PT-1	GB	PT-1	GB	PT-1	SL-1	RB-1	ACT-2	+9'-6"	
109	OFFICE	GB	PT-1	GB	PT-1	GB/GL	PT-1	GB	PT-1	CPT-1	RB-1	ACT-2	+9'-6"	
110	OFFICE	GB	PT-1	GB	PT-1	GB/GL	PT-1	GB	PT-1	CPT-1	RB-1	ACT-2	+9'-6"	
111	OFFICE	GB	PT-1	GB	PT-1	GB/GL	PT-1	GB	PT-1	CPT-1	RB-1	ACT-2	+9'-6"	
112	OFFICE	GB	PT-1	GB	PT-1	GB/GL	PT-1	GB	PT-1	CPT-1	RB-1	ACT-2	+9'-6"	
113	OFFICE	GB	PT-1	GB	PT-1	GB/GL	PT-1	GB	PT-1	CPT-1	RB-1	ACT-2	+9'-6"	
114	OFFICE	GB	PT-1	GB	PT-1	GB/GL	PT-1	GB/GL	PT-1	CPT-1	RB-1	ACT-2	+9'-6"	
115	PLAN STORAGE	GB	PT-1	GB	PT-1	GB	PT-1	GB	PT-1	CPT-1	RB-1	ACT-2	+9'-6"	
116	OFFICE	GB/GL	PT-1	GB/GL	PT-1	GB	PT-1	GB	PT-1	CPT-1	RB-1	ACT-1	+9'-6"	
117	OPEN OFFICE	GB	PT-1	GB	PT-1	GB	PT-1	GB	PT-1	CPT-1	RB-1	ACT-1	+9'-6"	
118	ELEVATOR MACHINE ROOM	GB	PT-1	GB	PT-1	GB	PT-1	GB	PT-1	CS	EPX-1	O.T.S.	O.T.S	
119	STORAGE	GB	PT-1	GB	PT-1	GB	PT-1	GB	PT-1	SL-2	RB-1	ACT-2	+9'-6"	
120	STORAGE	GB	PT-1	GB	PT-1	GB	PT-1	GB	PT-1	SL-2	RB-1	ACT-2	+9'-6"	
121	STORAGE	GB	PT-1	GB	PT-1	GB	PT-1	GB	PT-1	SL-2	RB-1	ACT-2	+9'-6"	
122	HALL	GB	PT-1	GB	PT-1	GB/GL	PT-1	GB	PT-1	SL-1	RB-1	ACT-1	+9'-6"	
123	CONFERENCE ROOM	GB	PT-1	GB	PT-3	GB/GL	PT-1	GB/GL	PT-1	CPT-1	RB-1	ACT-2	+9'-6"	
124	CONF SUPPORT ROOM	GB	PT-1	GB	PT-3	GB	PT-1	GB/GL	PT-1	CPT-1	RB-1	ACT-2	+9'-6"	
125	DAB CONFERENCE ROOM	GB/GL	PT-1	GB	TWF	GB	TWF	GB/GL	PT-1	CPT-1	WB-1	ACT-1/PT-1	VARIES	SEE CEILING PLAN
126	PUBLIC ALCOVE	GB	PT-3	GB	PT-3	GB	PT-1	GB	PT-3	CPT-1	RB-1	ACT-1	+10'-0"	SEE CEILING PLAN
127	RESTROOM	GB	PT-1/CT-2	GB	PT-1/CT-2	GB	PT-1/CT-2	GB	PT-1/CT-2	CT-1	CT-2	PT-1	+8'-0"	COVE BASE
128	RESTROOM	GB	PT-1/CT-2	GB	PT-1/CT-2	GB	PT-1/CT-2	GB	PT-1/CT-2	CT-1	CT-2	PT-1	+8'-0"	COVE BASE
129	HALL	GB	PT-1	GB	PT-1	GB	PT-1	GB/GL	PT-1	SL-2	RB-1	ACT-1	+9'-6"	
130	JANITOR CLOSET	GB	PT-1/FRP-1	GB	PT-1/FRP-1	GB	PT-1/FRP-1	GB	PT-1/FRP-1	CS	RB-1	O.T.S.	O.T.S	
131	STORAGE	GB	PT-1	GB	PT-1	GB	PT-1	GB	PT-1	SL-2	RB-1	O.T.S.	O.T.S	
132	CONFERENCE ROOM	GB	PT-1	GB	PT-1	GB	PT-1	GB	PT-1	CPT-1	RB-1	ACT-1	+9'-6"	
133	IDF	GB	PT-1	GB	PT-1	GB	PT-1	GB	PT-1	CS	RB-1	O.T.S.	O.T.S	
ST-1	STAIR 1	GB	PT-1	GB	PT-1	GB	PT-1	GB	PT-4	CPT-2	RB-1	OPEN	OPEN	
ST-2	STAIR 2	GL		GL		GB	WS-1/WS-2	GB	PT-3	ST-2/ RB-2		OPEN	OPEN	
SECOND FLOOR														
200	RECEPTION	GL		GB	WC-1	GB	WS-1/WS-2	GB	PT-4	CPT-2	RB-1	ACT-1/PT-1	VARIES	
201	ELEVATOR LOBBY	GB	WS-1/WS-2	GB	PT-3	GB	PT-1	GB	OPEN	CPT-2	RB-1	ACT-1/PT-1	VARIES	SEE CEILING PLAN
202	OPEN OFFICE	GB	PT-1	GB	PT-2	GB	PT-1	GB	PT-1	CPT-1	RB-1	ACT-2	+9'-6"	
203	OFFICE	GB/GL	PT-1	GB	PT-1	GB	PT-1	GB	PT-1	CPT-1	RB-1	ACT-2	+9'-6"	
204	OFFICE	GB/GL	PT-1	GB	PT-1	GB	PT-1	GB/GL	PT-1	CPT-1	RB-1	ACT-2	+9'-6"	
205	OFFICE	GB	PT-1	GB	PT-1	GB	PT-1	GB/GL	PT-1	CPT-1	RB-1	ACT-2	+9'-6"	
206	OFFICE	GB	PT-1	GB	PT-1	GB	PT-1	GB/GL	PT-1	CPT-1	RB-1	ACT-2	+9'-6"	
207	OFFICE	GB	PT-1	GB	PT-1	GB/GL	PT-1	GB/GL	PT-1	CPT-1	RB-1	ACT-2	+9'-6"	
208	OFFICE	GB	PT-1	GB	PT-1	GB	PT-1	GB/GL	PT-1	CPT-1	RB-1	ACT-2	+9'-6"	
209	STORAGE	GB	PT-1	GB	PT-1	GB	PT-1	GB	PT-1	SL-2	RB-1	ACT-2	+9'-6"	
210	CONFERENCE ROOM	GB	PT-1	GB	PT-1	GB	PT-1	GB	PT-1	CPT-1	RB-1	ACT-1	+9'-6"	
211	CONFERENCE ROOM	GB	PT-1	GB	PT-3	GB/GL	PT-1	GB/GL	PT-1	CPT-1	RB-1	ACT-2	+9'-6"	
212	OPEN OFFICE	GB	PT-1	GB	PT-1	GB	PT-1	GB	PT-1	CPT-1	RB-1	ACT-2	+9'-6"	
213	OFFICE	GB	PT-1	GB	PT-1	GB	PT-1	GB	PT-1	CPT-1	RB-1	ACT-2	+9'-6"	
214	OFFICE	GB	PT-1	GB	PT-1	GB/GL	PT-1	GB	PT-1	CPT-1	RB-1	ACT-2	+9'-6"	
215	OFFICE	GB	PT-1	GB	PT-1	GB/GL	PT-1	GB	PT-1	CPT-1	RB-1	ACT-2	+9'-6"	
216	OFFICE	GB	PT-1	GB	PT-1	GB/GL	PT-1	GB	PT-1	CPT-1	RB-1	ACT-2	+9'-6"	
217	OFFICE	GB	PT-1	GB	PT-1	GB/GL	PT-1	GB	PT-1	CPT-1	RB-1	ACT-2	+9'-6"	
218	OFFICE	GB	PT-1	GB	PT-1	GB/GL	PT-1	GB	PT-1	CPT-1	RB-1	ACT-2	+9'-6"	
219	OFFICE	GB	PT-1	GB	PT-1	GB/GL	PT-1	GB	PT-1	CPT-1	RB-1	ACT-2	+9'-6"	
220	OFFICE	GB	PT-1	GB	PT-1	GB/GL	PT-1	GB	PT-1	CPT-1	RB-1	ACT-2	+9'-6"	
221	OFFICE	GB	PT-1	GB	PT-1	GB/GL	PT-1	GB	PT-1	CPT-1	RB-1	ACT-2	+9'-6"	
222	OFFICE	GB	PT-1	GB	PT-1	GB/GL	PT-1	GB	PT-1	CPT-1	RB-1	ACT-2	+9'-6"	
223	STORAGE	GB	PT-1	GB	PT-1	GB	PT-1	GB	PT-1	SL-1	RB-1	ACT-2	+9'-6"	
224	ELECT. PANEL CLOSET	GB	PT-1	GB	PT-1	GB	PT-1	GB	PT-1	SL-1	RB-1	O.T.S.	O.T.S.	
225	MEN'S TOILET	GB	PT-1/CT-2	GB	PT-1/CT-2	GB	PT-1/CT-2	GB	PT-1/CT-2	CT-1	CT-2	PT-1	VARIES	COVE BASE
226	WOMEN'S TOILET	GB	PT-1/CT-2	GB	PT-1/CT-2	GB	PT-1/CT-2	GB	PT-1/CT-2	CT-1	CT-2	PT-1	VARIES	COVE BASE
227	CONFERENCE ROOM	GB/GL	PT-1	GB	PT-1	GB	PT-1	GB	PT-1	CPT-1	RB-1	ACT-1	+9'-6"	
228	OPEN OFFICE	GB/GL	PT-1	GB	PT-1	GB	PT-1	GB	PT-1	CPT-1	RB-1	ACT-1	+10'-0"	
229	CONFERENCE ROOM	GB/GL	PT-1	GB	TWF	GB	TWF	GB	TWF	CPT-1	RB-1	ACT-1/PT-1	VARIES	SEE CEILING PLAN
230	OPEN OFFICE	GB	PT-1	GB	PT-1	GB	PT-1	GB	PT-1	CPT-1	RB-1	ACT-1	+9'-6"	
ST-1	STAIR 1	GB	PT-1	GB	PT-1	GB	PT-1	GB	PT-4	CPT-2	RB-1	PT-1	+11'-0"	
ST-2	STAIR 2	GL		GL		GB	WS-1/WS-2	GB	PT-3	SL-2/RB-2	RB-1	PT-1	+11'-0"	

ABBREVIATIONS

ACT – ACOUSTIC CEILING TILE
CMU – CONCRETE MASONRY UNIT
CPT – CARPET
CS – SEALED CONCRETE
CT – CERAMIC TILE
EPX – EPOXY FLOORING
FAB – FABRIC
FP – FABRIC PANEL
GB – GYPSUM BOARD
GL – GLASS
OTS – OPEN TO STRUCTURE ABOVE
SV – LINOLEUM SHEET
TPN – TOILET PARTITION
WC – WALL COVERING
WCT – WOOD CEILING TILE
WD – WOOD
WR – WATER RESISTANT GYPSUM BOARD

ROOM FINISH NOTES

1. ALL TOILET ROOMS, JANITOR CLOSETS AND KITCHEN TO RECEIVE SEMI-GLOSS PAINT, ALL OTHER AREAS TO RECEIVE EGGSHELL PAINT FINISH, U.O.N.
2. ALL PAINTED METAL SHALL HAVE A SEMI-GLOSS FINISH U.O.N.

APPROVED
MAY 0 1 2006
BUILDING & SAFETY
CITY OF FONTANA

REVIEWED BY / DATE

Approval of these plans shall not be construed to be a permit for, or an approval of any violation of any of the provisions of the state or local laws. One set of approved plans must be kept on the job until completion.
WILLDAN

LANGDON WILSON
ARCHITECTURE
PLANNING
INTERIORS

18800 VON KARMAN AVENUE, SUITE 200
IRVINE, CALIFORNIA 92612-1517
949 - 833 - 9193

STRUCTURAL
KPFF 949 - 252 - 1022
MECHANICAL
TKSC 949 - 756 - 0565
ELECTRICAL
GLP 714 - 751 - 1851
LANDSCAPE
FRANK RADMACHER 714 - 832 - 1774
CIVIL ENGINEER
IKE CONSULTING 714 - 241 - 0606
AUDIO / VISUAL
VENEKLASEN ASSOCIATES 310 - 450 - 1733
DATA TELEPHONE
PLANNET CONSULTING 714 - 982 - 5800

CITY OF FONTANA
DEVELOPMENT SERVICES
ORGANIZATION BUILDING
8353 SIERRA AVENUE FONTANA, CALIFORNIA

CITY OF FONTANA CALIFORNIA

REV.	DATE	ISSUED FOR	REV.	DATE	ISSUED FOR
	10-17-05	DD PACKAGE			
	12-05-05	PLAN CHECK			
	02-06-06	PC RESUBMIT.			
	04-17-06	PERMIT SET			
	04-17-06	BID SET			

Stamp
LICENSED ARCHITECT JON PATRICK ALLEN NO. C7181 REN. 03-31-07 STATE OF CALIFORNIA

DATE 11/01/05 SCALE –
DRAWN BY: SCT
JOB NO. L454-000 CADD TITLE A810
SHEET TITLE:
ROOM FINISH SCHEDULE
SHEET NUMBER:
A810

© Copyright 2005 Langdon Wilson

PERMIT SET / BID SET 04-17-06

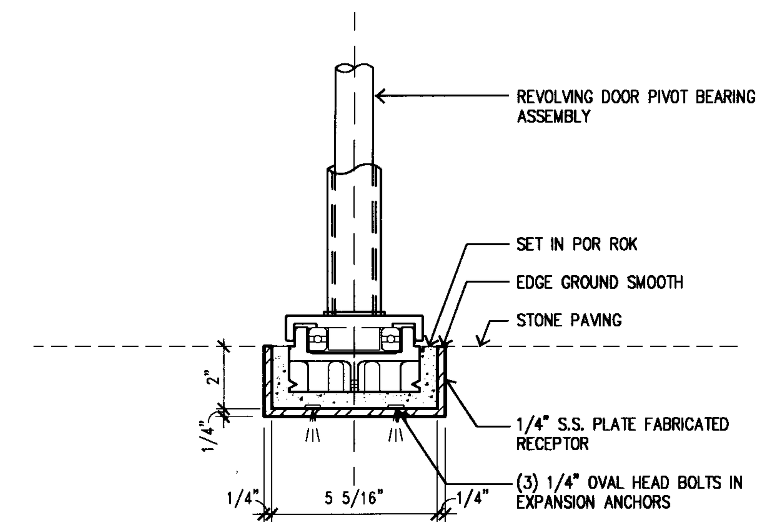

REVOLVING DOOR PIVOT 24
DE\DR-10 3"=1'-0"

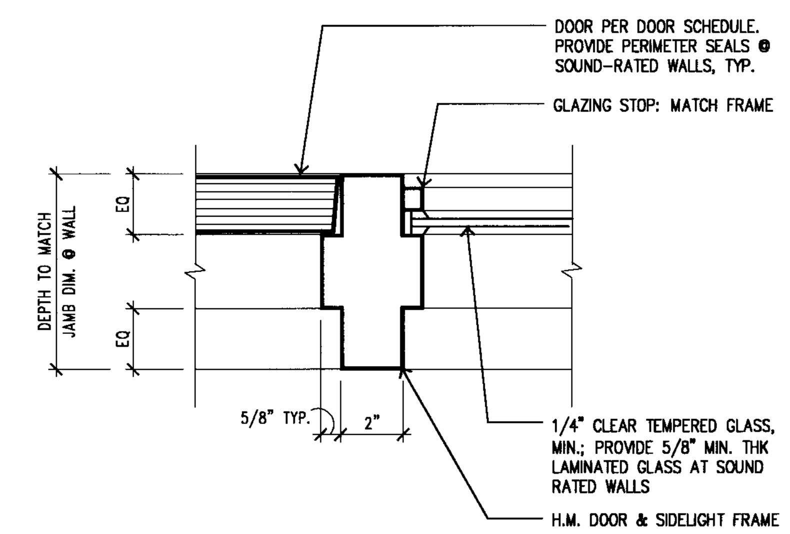

DR JAMB @ SIDELITE 20
DE\DR-05 3" = 1'-0"

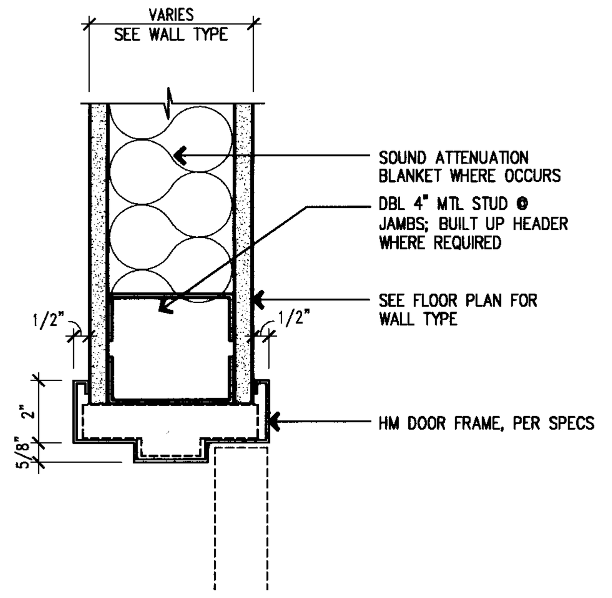

DOOR HEAD/JAMB 15
DE\DR-01 3"=1'-0"

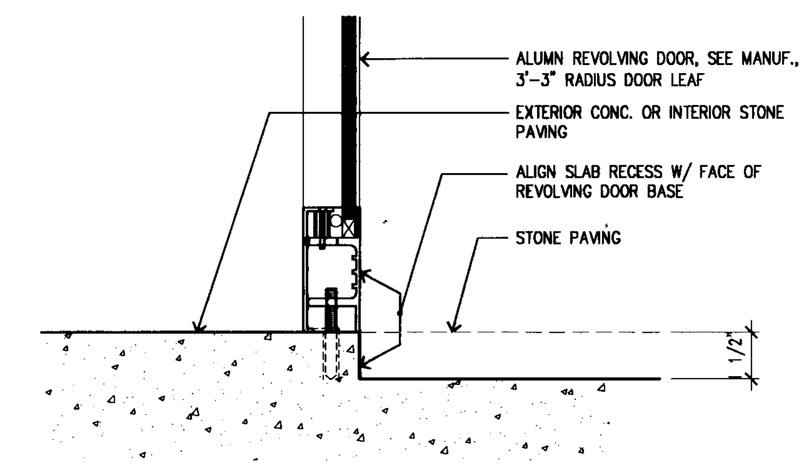

REVOLVING DOOR SILL 23
DE\DR-09 3"=1'-0"

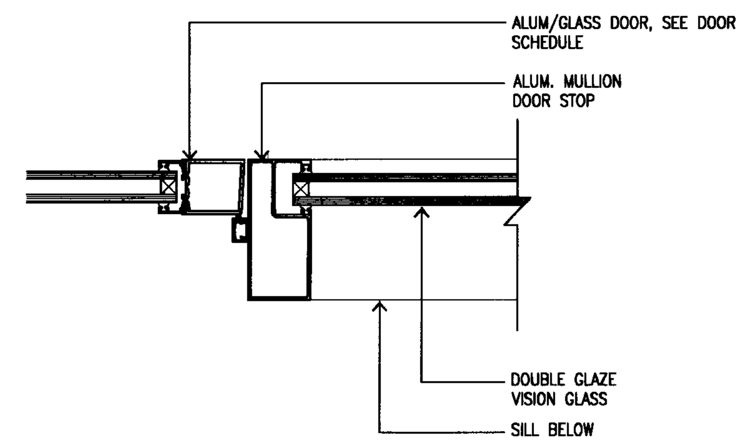

CURTAIN WALL DR JAMB 19
DE\DR-04 3" = 1'-0"

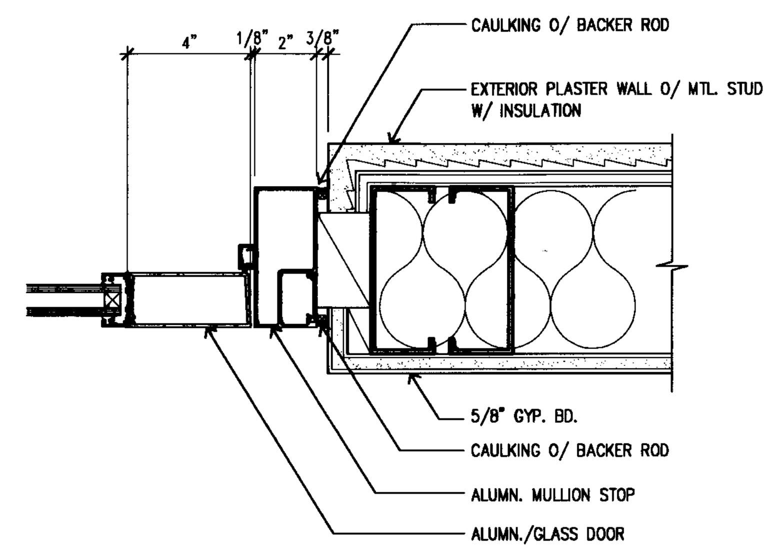

DOOR JAMB 22
DE\DR-08 3"=1'-0"

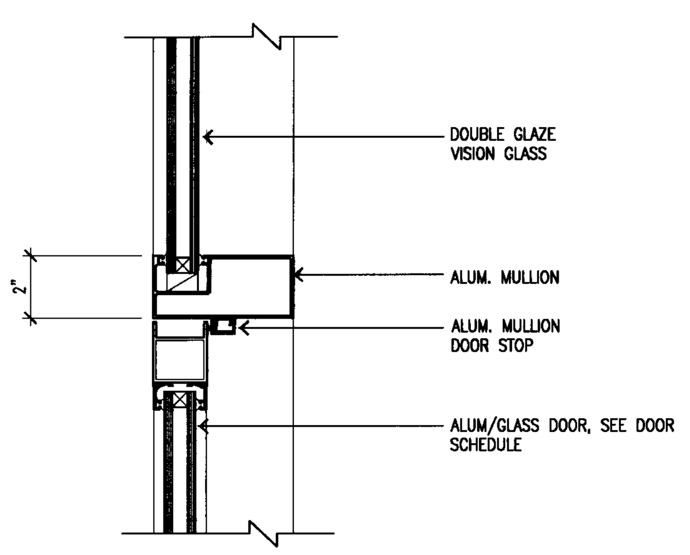

CURTAIN WALL DR HEAD 18
DE\DR-03 3" = 1'-0"

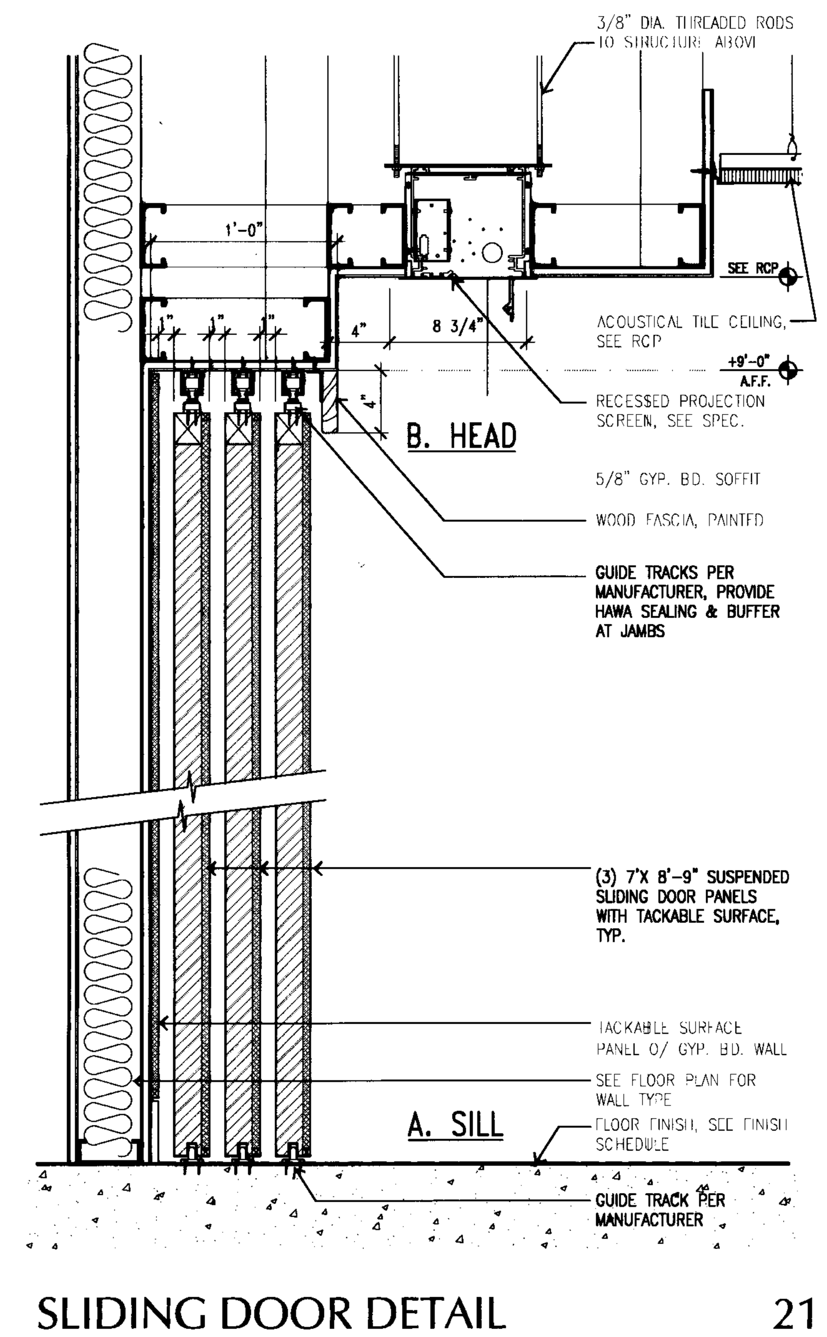

SLIDING DOOR DETAIL 21
DE\DR-07 1 1/2" = 1'-0"

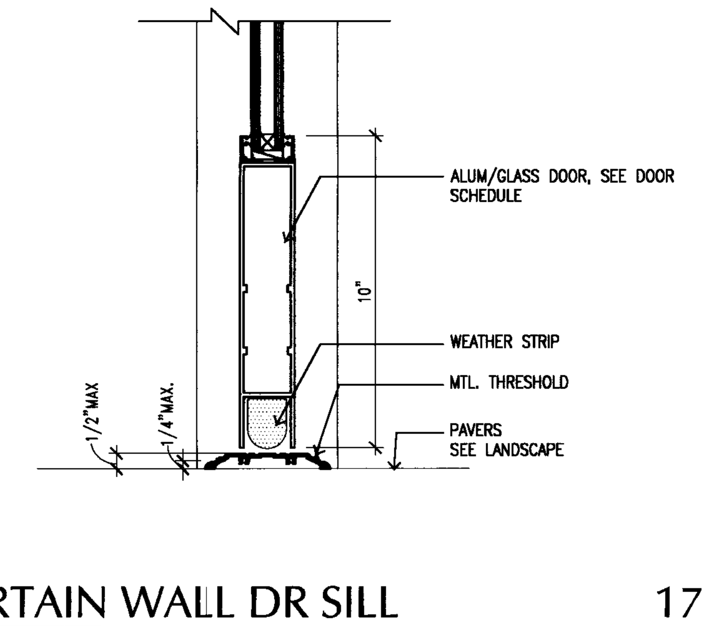

CURTAIN WALL DR SILL 17
DE\DR-02.DWG 3" = 1'-0"

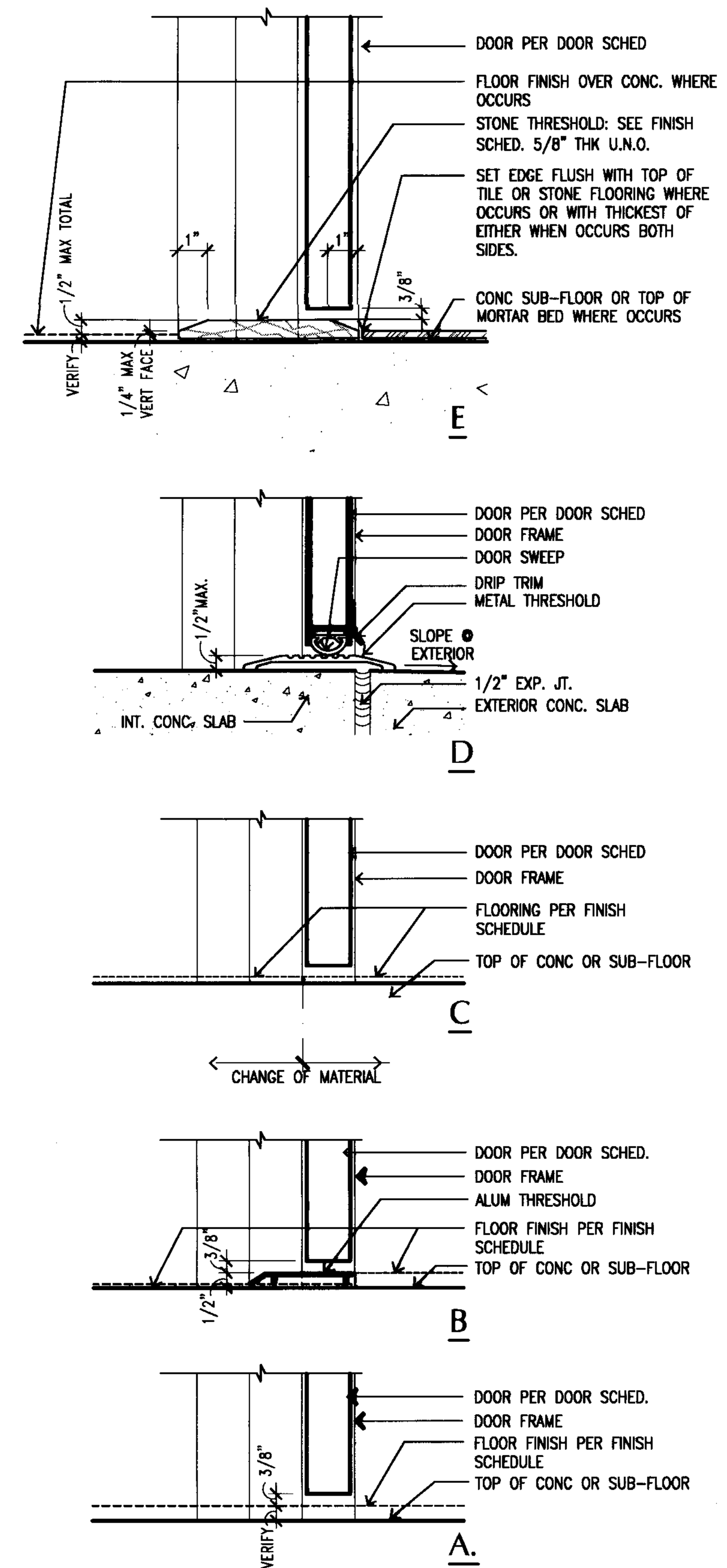

DOOR THRESHOLD 12
DE\DRSIL-01 3" = 1'-0"

DOOR SCHEDULE

	DOOR					FRAME								
	NO.	SIZE	TYPE	MATL	FINISH	HEAD	JAMB	JAMB	SILL	MATL	FINISH	LABEL	HDW	REMARKS
		(W X H)												
FIRST FLOOR	100A	3'-0" X 8'-3 1/2"	A	AL	FF	18	19	–	17	AL	FF	–	02	PANIC HARDWARE – ADA SIGNAGE, SEE DET. # 12/A920
	100B	3'-0" X 8'-3 1/2"	A	AL	FF	18	19	–	17	AL	FF	–	03	PANIC HARDWARE
	100C	6'-6" X 8'-3 1/2"	–	AL	FF	–	–	–	23	AL	FF	–	08	REVOLVING DOOR ASSEMBLY
	100D	3'-0" X 8'-3 1/2"	A1	AL	FF	18	19	–	17	AL	FF	–	04	PANIC HARDWARE – ADA SIGNAGE, SEE DET. # 13/A920
	100E	6'-6" X 8'-3 1/2"	–	AL	FF	–	–	–	23	AL	FF	–	08	REVOLVING DOOR ASSEMBLY
	103A	3'-0" X 8'-0"	B	SC	WD	15	15	–	12A	HM	MP	–	20	PANIC HARDWARE
	103B	3'-0" X 7'-0"	B	SC	WD	15	15	–	12A	HM	MP	–	05	PANIC HARDWARE, SEE DET. # 14/A920
	103C	2'-4" X 7'-0"	B	SC	WD	15	15	–	12A	HM	MP	–	20	–
	103D	3'-0" X 3'-2"	F	SC	WD	–	–	–	–	WD	MP	–	26	GATE, SEE DET. # 17/A920
	103E	3'-0" X 3'-2"	F	SC	WD	–	–	–	–	WD	MP	–	26	GATE, SEE DET. # 17/A920
	104	3'-0" X 7'-0"	B	SC	WD	15	15	–	12E	HM	MP	–	13	ADA SIGNAGE
	105	3'-0" X 7'-0"	B	SC	WD	15	15	–	12E	HM	MP	–	13	ADA SIGNAGE
	107	3'-0" X 7'-0"	B	SC	WD	15	15	–	12A	HM	MP	–	14	–
	108	NOT USED												
	108A	3'-0" X 8'-0"	A	AL	FF	18	19	–	12D	AL	FF	–	06	–
	109	3'-0" X 7'-0"	B	SC	WD	15	15	–	12A	HM	MP	–	16	–
	110	3'-0" X 7'-0"	B	SC	WD	15	15	–	12A	HM	MP	–	16	–
	111	3'-0" X 7'-0"	B	SC	WD	15	15	–	12A	HM	MP	–	16	–
	112	3'-0" X 7'-0"	B	SC	WD	15	15	–	12A	HM	MP	–	16	–
	113	3'-0" X 7'-0"	B	SC	WD	15	15	–	12A	HM	MP	–	16	–
	114	3'-0" X 7'-0"	B	SC	WD	15	15	–	12A	HM	MP	–	16	–
	116	3'-0" X 7'-0"	B	SC	WD	15	15	–	12A	HM	MP	–	16	–
	117	3'-0" X 7'-0"	B	SC	WD	15	15	–	12A	HM	MP	–	17	SEE DET. # 15/A920
	118	3'-0" X 7'-0"	B	SC	MP	15	15	–	12A	HM	MP	60MIN	18	
	119	3'-0" X 7'-0"	B	SC	WD	15	15	–	12A	HM	MP	–	19	–
	120	3'-0" X 7'-0"	B	SC	WD	15	15	–	12A	HM	MP	–	19	–
	121	3'-0" X 7'-0"	B	SC	WD	15	15	–	12A	HM	MP	–	19	–
	122	3'-0" X 8'-0"	A	AL	FF	18	19	–	17	AL	FF	–	07	–
	123	3'-0" X 7'-0"	D	SC	WD	15	15	13	12A	HM	MP	–	20	–
	–	NOT USED	–	–	–	–	–	–	–	–	–	–	–	–
	124B	3'-0" X 7'-0"	B	SC	WD	15	15	–	12A	HM	MP	–	16	–
	125A	PR 3'-0" X 7'-0"	B1	SC	WD	–	15	–	12A	HM	MP	–	09	–
	125B	3'-0" X 7'-0"	B	SC	WD	15	15	–	12A	HM	MP	–	21	SEE DET. # 15/A920
	125C	(3) 7'-0" X 8'-9"	G	HC	WD	21B	–	–	21A	–	–	–	29	(2) PANEL WD DOORS GLUED TOGETHER W/ BISCUITS & W/ TACKABLE SURFACE
														CONTINUOUS BLOCKING @ TOP & BOTTOM RAILS W/ FIBER OR FOAM CORE
	127	3'-0" X 7'-0"	B	SC	WD	15	15	–	12E	HM	MP	–	22	ADA SIGNAGE ON DOOR
	128	3'-0" X 7'-0"	B	SC	WD	15	15	–	12E	HM	MP	–	22	ADA SIGNAGE ON DOOR
	129	PR 3'-0" X 8'-0"	A1	AL	FF	18	22	–	17	AL	FF	–	01	–
	130	3'-0" X 7'-0"	B	SC	WD	15	15	–	12A	HM	MP	–	12	–
	131	3'-0" X 7'-0"	B	SC	WD	15	15	–	12A	HM	MP	–	19	–
	132	3'-0" X 7'-0"	B	SC	WD	15	15	–	12A	HM	MP	–	20	–
	133	3'-0" X 7'-0"	B	SC	WD	15	15	–	12A	HM	MP	–	23	–
	134	3'-0" X 7'-0"	C	MC	WD	15	15	–	12A	WD	MP	90	24	SEE DET. # 16/A920
SECOND FLOOR	202	3'-0" X 7'-0"	B	SC	WD	15	15	–	12A	HM	MP	–	17	SEE DET. # 15/A920
	202A	3'-0" X 7'-0"	B	SC	WD	15	15	–	12A	HM	MP	–	17	–
	202B	3'-0" X 7'-0"	B	SC	WD	15	15	–	12A	HM	MP	–	20	–
	203	3'-0" X 7'-0"	B	SC	WD	15	15	–	12A	HM	MP	–	16	–
	203A	3'-0" X 7'-0"	B	SC	WD	15	15	–	12A	HM	MP	–	16	–
	204	3'-0" X 7'-0"	B	SC	WD	15	15	–	12A	HM	MP	–	16	–
	205	3'-0" X 7'-0"	B	SC	WD	15	15	–	12A	HM	MP	–	16	–
	206	3'-0" X 7'-0"	B	SC	WD	15	15	–	12A	HM	MP	–	16	–
	207	3'-0" X 7'-0"	B	SC	WD	15	15	–	12A	HM	MP	–	16	–
	208	3'-0" X 7'-0"	B	SC	WD	15	15	–	12A	HM	MP	–	16	–
	209	3'-0" X 7'-0"	B	SC	WD	15	15	–	12A	HM	MP	–	19	–
	210	3'-0" X 7'-0"	D	SC	WD	15	15	13	12A	HM	MP	–	15	–
	210A	3'-0" X 7'-0"	B	SC	WD	15	15	–	12A	HM	MP	–	17	SEE DET. # 15/A920
	211	3'-0" X 7'-0"	B	SC	WD	15	15	13	12A	HM	MP	–	20	–
	212	3'-0" X 7'-0"	B	SC	WD	15	15	–	12A	HM	MP	–	17	SEE DET. # 15/A920
	212A	2'-0" X 7'-0"	C	SC	WD	15	15	–	12A	HM	MP	–	20	–
	213	3'-0" X 7'-0"	B	SC	WD	15	15	–	12A	HM	MP	–	16	–
	214	3'-0" X 7'-0"	B	SC	WD	15	15	–	12A	HM	MP	–	16	–
	215	3'-0" X 7'-0"	B	SC	WD	15	15	–	12A	HM	MP	–	16	–
	216	3'-0" X 7'-0"	B	SC	WD	15	15	–	12A	HM	MP	–	16	–
	217	3'-0" X 7'-0"	B	SC	WD	15	15	–	12A	HM	MP	–	16	–
	218	3'-0" X 7'-0"	B	SC	WD	15	15	–	12A	HM	MP	–	16	–
	219	3'-0" X 7'-0"	B	SC	WD	15	15	–	12A	HM	MP	–	16	–
	220	3'-0" X 7'-0"	B	SC	WD	15	15	–	12A	HM	MP	–	16	–
	221	3'-0" X 7'-0"	B	SC	WD	15	15	–	18A	HM	MP	–	16	–
	222	3'-0" X 7'-0"	B	SC	WD	15	15	–	12A	HM	MP	–	16	–
	223	3'-0" X 7'-0"	B	SC	WD	15	15	–	12A	HM	MP	–	19	–
	224	PR 2'-3" X 7'-0"	B	SC	WD	15	15	–	12A	HM	MP	–	10	–
	225	3'-0" X 7'-0"	B	SC	WD	15	15	–	12E	HM	MP	–	13	ADA SIGNAGE
	225A	3'-0" X 7'-0"	B	SC	WD	15	15	–	12A	HM	MP	–	23	–
	226	3'-0" X 7'-0"	B	SC	WD	15	15	–	12E	HM	MP	–	13	ADA SIGNAGE
	227	3'-0" X 7'-0"	C	SC	WD	15	15	–	12A	HM	MP	–	20	–
	229	3'-0" X 7'-0"	B	SC	WD	15	15	–	12A	HM	MP	–	25	–
	229A	3'-0" X 7'-0"	D	SC	WD	15	15	13	12A	HM	MP	–	17	SEE DET. # 15/A920
	G-1	3'-6" X 7'-0"	–	MTL	MP	–	–	–	–	MTL	–	–	27	–
	G-2	3'-0" X 7'-0"	–	HM	MP	–	–	–	–	HM	MP	–	28	–
	G-3	8'-0" X 8'-0"	–	MTL	MP	–	–	–	–	MTL	–	–	30	–
	G-4	8'-0" X 8'-0"	–	MTL	MP	–	–	–	–	MTL	–	–	31	–

APPROVED
MAY 0 1 2006
BUILDING & SAFETY
CITY OF FONTANA

DOOR SCHEDULE NOTES

1. SEE SHEET A801 FOR DOOR DETAILS UNLESS SCHEDULED OTHERWISE ABOVE
2. EXIT DOORS REQUIRED TO BE ACCESSIBLE PER C.B.C. CHAPTER 11 SHALL SWING TO THE FULLY OPEN POSITION WITH A FORCE APPLIED TO THE LATCH SIDE NOT GREATER THAN: 5.5 LBS – INTERIOR DOORS, 8 LBS – EXTERIOR DOORS, OR 15 LBS – FIRE-RATED DOORS. (1120A.2.5)
3. HAND ACTIVATED EXIT DOOR HARDWARE SHALL BE CENTERED BETWEEN 30" AND 44" ABOVE THE FLOOR (1003.2.1.9)
4. REGARDLESS OF OCCUPANT LOAD SERVED, EXIT DOORS SHALL BE OPERABLE FROM INSIDE WITHOUT USE OF A KEY OR ANY SPECIAL KNOWLEDGE OR EFFORT. PER C.B.C., PERMITTED EXCEPTIONS REQUIRE PRIOR APPROVAL FROM THE BUILDING OFFICIAL. USE OF AN EXCEPTION CAN BE REVOKED BY THE GOVERNING BUILDING OFFICIAL AT ANY TIME FOR DUE CAUSE (1003.3.1.8)

DOOR SCHEDULE LEGEND

MATERIAL		FINISH	
AL	ALUMINUM	AAL	CLR ANOD ALUM
HC	FIBER OR FOAM CORE	FF	FACTORY FINISH
HM	HOLLOW METAL	MP	SHOP PRIMED / FIELD PAINTED
GL	TEMPERED GLASS	PL	PLASTIC LAMINATE
MTL	METAL	WD	WOOD VENEER FINISH
SC	SOLID CORE WOOD	PT	PAINTED
PS	PAINTED STEEL		
MC	MINERAL CORE		

REVIEWED BY ________ DATE
Approval of these plans shall not be construed to be a permit for ... approval of any violation of ... the provisions of ...

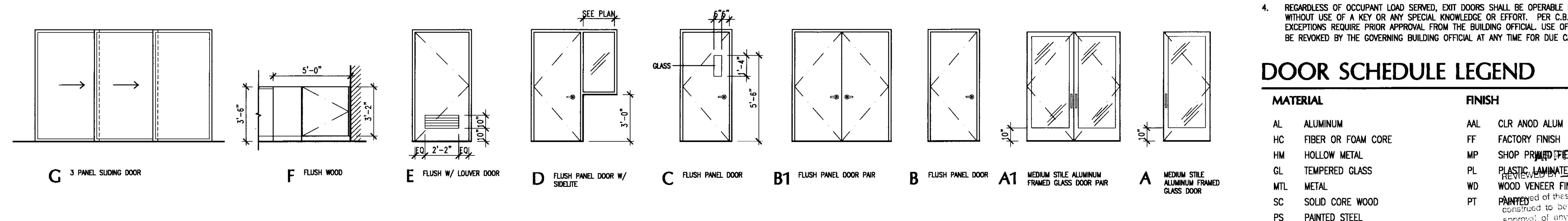

DOOR TYPES 6
– SCALE: NTS

LANGDON WILSON
ARCHITECTURE
PLANNING
INTERIORS

18800 VON KARMAN AVENUE, SUITE 200
IRVINE, CALIFORNIA 92612-1517
949 - 833 - 9193

STRUCTURAL
KPFF 949 - 252 - 1022
MECHANICAL
TKSC 949 - 756 - 0565
ELECTRICAL
GLP 714 - 751 - 1851
LANDSCAPE
FRANK RADMACHER 714 - 832 - 1774
CIVIL ENGINEER
IKE CONSULTING 714 - 241 - 0606
AUDIO / VISUAL
VENEKLASEN ASSOCIATES 310 - 450 - 1733
DATA TELEPHONE
PLANNET CONSULTING 714 - 982 - 5800

CITY OF FONTANA
DEVELOPMENT SERVICES
ORGANIZATION BUILDING
8353 SIERRA AVENUE FONTANA, CALIFORNIA

REV.	DATE	ISSUED FOR	REV.	DATE	ISSUED FOR
	10-17-05	DD PACKAGE			
	12-05-05	PLAN CHECK			
	02-06-06	PC RESUBMIT.			
	03-13-06	PC#2 RESUBMIT.			
	04-17-06	PERMIT SET			
	04-17-06	BID SET			

Stamp
LICENSED ARCHITECT
JON PATRICK ALLEN
NO. C7181
REN. 03-31-07
STATE OF CALIFORNIA

DATE 11/01/05 SCALE AS NOTED
DRAWN BY:
JOB NO. L454-000 CADD TITLE A820
SHEET TITLE
DOOR SCHEDULE & TYPICAL DETAILS
SHEET NUMBER
A820

©Copyright 2005 Langdon Wilson

PERMIT SET / BID SET 04-17-06

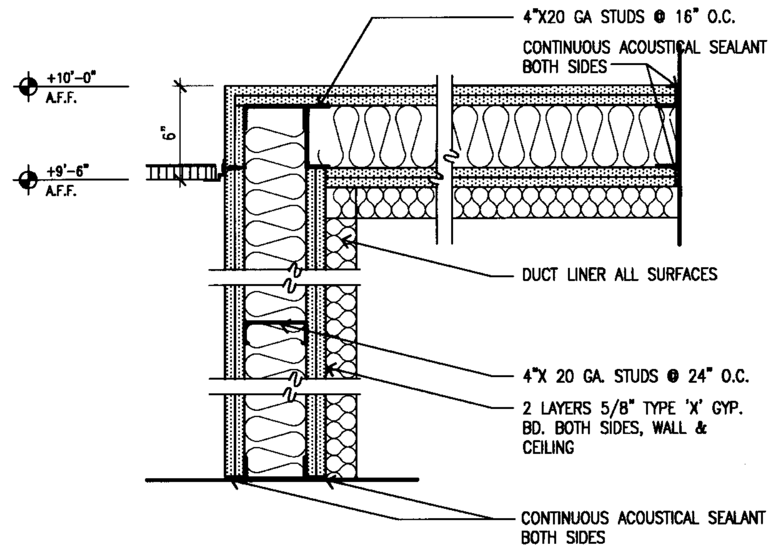

WALL TYPE 7

DE\DA-WT-07 1 1/2"=1'-0"

WALL TYPE SYMBOL

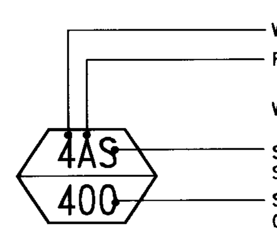

WALL TYPE DETAIL– SEE A830
FIRE RATING: **A** = 1 HR.
B = 2 HR.
WATER RESISTANT: **WR**
SOUND CONTROL ASSEMBLY : **S**
SEE WALL TYPE NOTES
STUD DEPTH:
012 = 1/2" RESILIENT CHANNEL
078 = 7/8" HAT CHANNEL FURRING
112 = 1 1/2" STUD/FURRING CHNL.
212 = 2 1/2" STUD
358 = 3 5/8" STUD
400 = 4" STUD
600 = 6" STUD
800 = 8" STUD

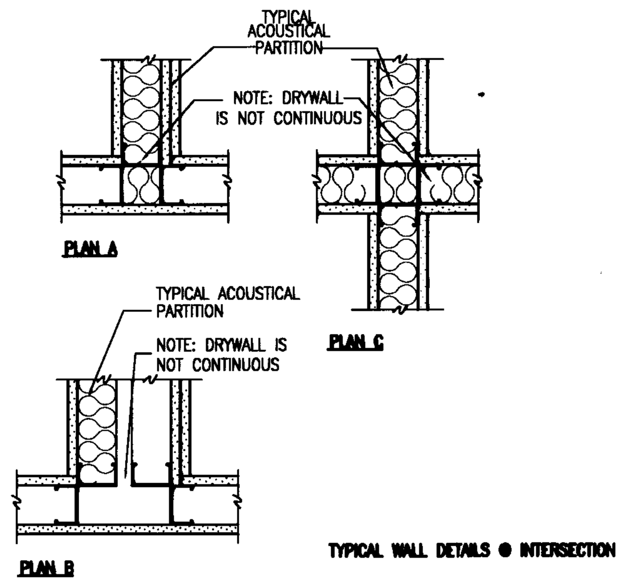

TYP. WALL DETAILS 11

DE\DA-WT-21 1 1/2"=1'-0"

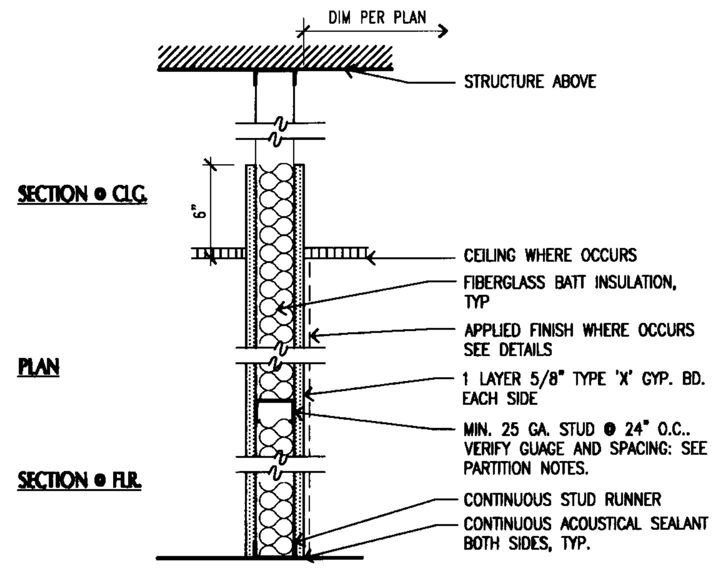

WALL TYPE 6

DE\DA-WT-24 1 1/2"=1'-0"

WALL AND PARTITION NOTES

1. ALL INTERIOR STUD GAUGES SHALL BE SELECTED AS REQUIRED FOR DESIGNATED STUD DEPTH FROM AN APPROVED MANUF. STUD TABLE OR PER STRUCTURAL ENGINEERING CALCULATIONS TO SATISFY THE FOLLOWING CONDITIONS:

A. INTERIOR WALLS RECEIVING "FLEXIBLE FINISH," SUCH AS PAINT, WALL-COVERING, THINSET TILES UP TO 4" SQ OR WOOD PANELS SHALL NOT DEFLECT MORE THAN L/240 UNDER A UNIFORM APPLIED LATERAL LOAD OF 5 PSF PLUS DEAD WEIGHT OF APPLIED PANELS WHERE APPLICABLE

B. INTERIOR WALLS RECEIVING "INFLEXIBLE FINISH" SUCH AS ANCHORED STONE VENEER, PLASTER AND THINSET TILES OVER 4" SQ SHALL NOT DEFLECT MORE THAN L/360 UNDER A UNIFORM APPLIED LATERAL LOAD OF 5 PSF PLUS WEIGHT OF APPLIED FINISH OR PANEL.

2. ALL FIRE RATED PARTITIONS TO BE CONSTRUCTED PER UL OR ICBO REPORT REQUIREMENTS. ALL THROUGH PENETRATIONS TO BE FIRE SAFED PER APPROVED MANUF. DETAILS TO MEET CODE REQUIREMENTS. PENETRATIONS THROUGH ONE SIDE OF AN ASSEMBLY ARE PERMITTED WHERE DETAILED AND IN COMPLIANCE WITH CODE. ALL OTHER OPENINGS TO BE PROTECTED BY FIXED, AUTOMATIC OR SELF-CLOSING DOORS, DAMPERS OR APPROVED GLAZED OPENINGS EQUAL IN RATING TO THE WALL EXCEPT WHERE SCHEDULED AND IN COMPLIANCE WITH CODE.

3. ALL SOUND CONTROL PARTITIONS OR WALLS TO BE CONSTRUCTED PER DETAILS AND THE SOUND CONTROL NOTES BELOW. SEALANTS AND BATT INSULATION TO BE SUBMITTED FOR APPROVAL. FIRE RATING REQUIREMENTS SHALL NOT BE COMPROMISED IN ANY WAY BY SOUND CONTROL REQUIREMENTS.

4. WALLS AND PARTITIONS ARE DIMENSIONED TO FACE OF CMU, CONCRETE, GYPSUM BOARD, AND FACE OF LATH AND PLASTER. THINSET OR APPLIED FINISHES LESS THAN 1/2" TOTAL THICKNESS ARE NOT DIMENSIONED ON PLANS. APPLIED PANELS OR ANCHORED STONE WITH A TOTAL ADDED THICKNESS GREATER THAN 1/2" ARE DIMENSIONED SEPARATELY TO THEIR FINISH FACES ON LARGE SCALE PLANS ONLY.

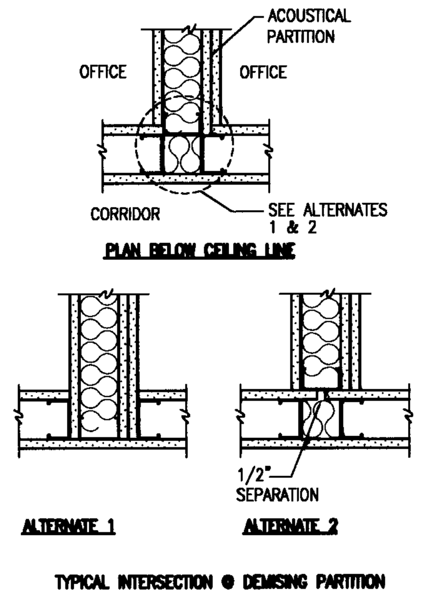

TYP. WALL DETAILS 10

DE\DA-WT-22 1 1/2"=1'-0"

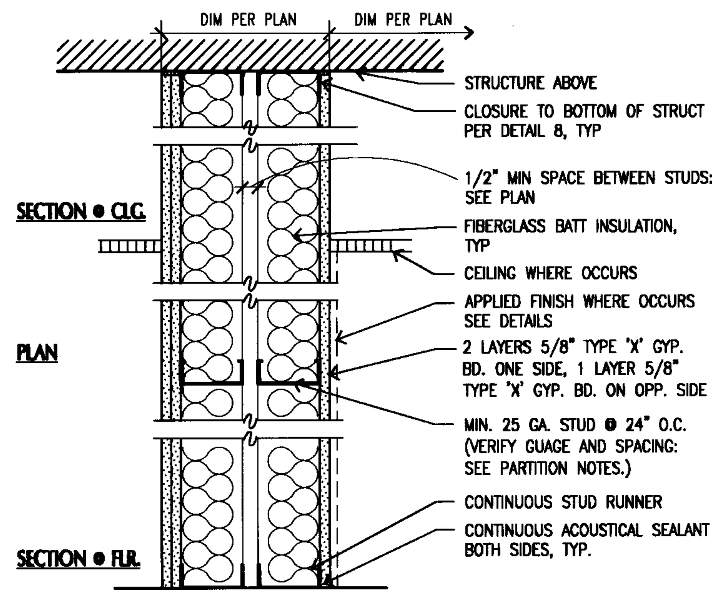

WALL TYPE 5

DE\DA-WT-05 1 1/2"=1'-0"

SOUND CONTROL 'S' PARTITIONS

1. ALL GYPSUM BOARD SHEETS TO RUN VERTICALLY.
2. TAPE OUTER JOINTS OF GYPSUM BOARD ONLY.
3. NO JOINTS EXCEPT AT STUDS.
4. STUD SIZES SHOWN ARE MINIMUM. LARGER SIZES MAY BE REQUIRED BASED ON HEIGHTS AND LOADING.
5. DRYWALL SCREW EDGE AND FIELD SPACING PER GYPSUM BOARD MANUFACTURER'S RECOMMENDATIONS. ALL SCREWS SHALL PENETRATE STUDS.
6. MINIMUM CSTS 40-44 CEILING RECOMMENDED.
7. FIBERGLASS BATT INSULATION SHALL BE OWENS/CORNING FIBERGLAS NOISE BARRIER BATTS, OCF FRICTION FIT BUILDING INSULATION OR APPROVED EQUAL. FIBERGLASS THICKNESS TO EQUAL STUD DEPTH.
8. STAGGER JOINTS OF GYPSUM BOARD WHERE MULTIPLE LAYERS OCCUR.
9. DO NOT GLUE MULTIPLE LAYERS OF GYPSUM BOARD TOGETHER.
10. ALL PENETRATIONS OF 'SOUND CONTROL' PARTITIONS SHALL BE ACOUSTICALLY SEALED. SEE 16 AND 9/A830 FOR TYPICAL ACCEPTABLE INSTALLATION DETAILS.
11. ALL 'SOUND CONTROL' PARTITIONS SHALL BE SEALED AND INSULATED AT PERIMETERS. SEE DETAIL 8/A830 FOR TYPICAL CLOSURE TO UNDERSIDE OF FLUTED METAL DECKING.

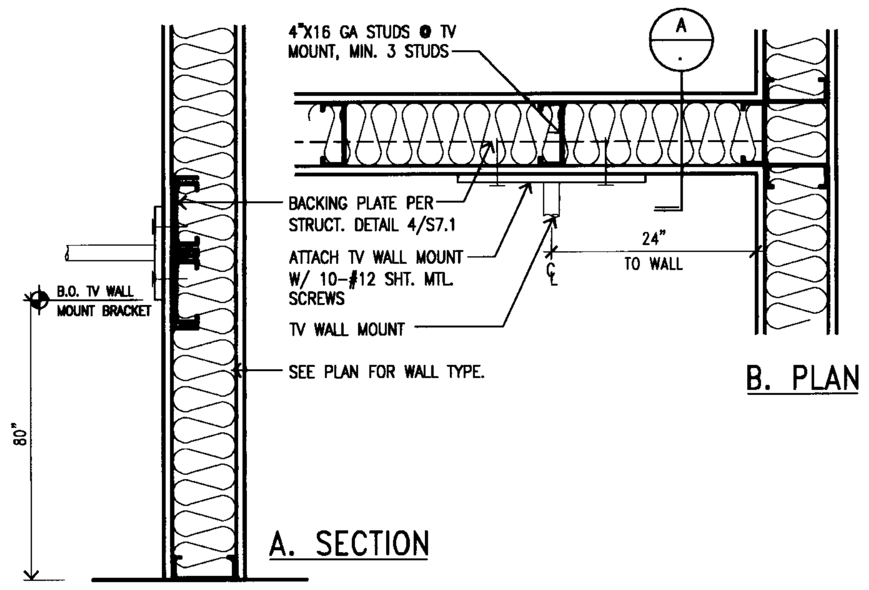

WALL DETAIL - TV WALL MOUNT 14

DE\WT-01 1 1/2"=1'-0"

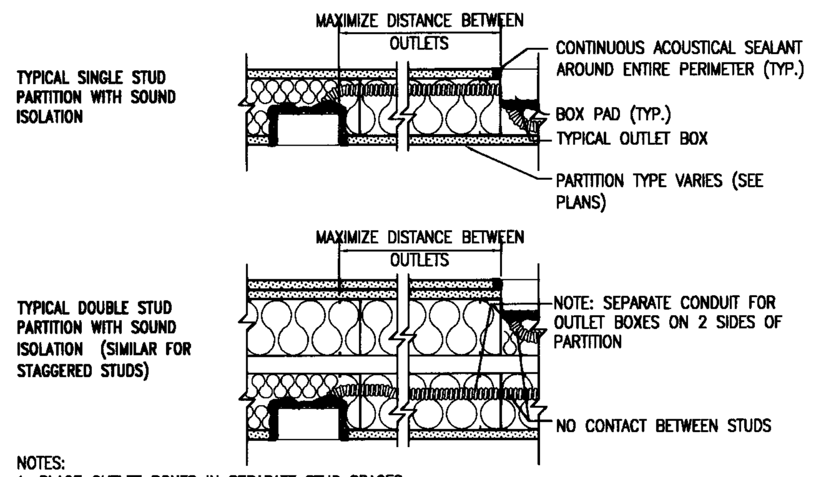

NOTES:
1. PLACE OUTLET BOXES IN SEPARATE STUD SPACES
2. AVOID BACK-TO-BACK OUTLETS.
3. PLUG ALL UNUSED KNOCK-OUTS IN OUTLET BOXES WITH KNOCK-OUT CAPS.
4. PROVIDE BACKING EQUIVALENT TO "LOWERY'S" OUTLET BOX PADS (HARRY A LOWERY & ASSOCIATES INC. (213) 875-0223)
5. DEPTH OF OUTLET BOX MUST BE COMPATIBLE WITH STUD SIZE IN ORDER TO ACCOMMODATE BOX PAD.
6. ACOUSTICAL BOX PAD REQUIREMENT APPLIES TO ALL PARTITIONS WITH ACOUSTICAL INSULATION. APPLIES TO POWER, PHONE, COMMUNICATIONS, ETC.

OUTLET BOX DETAILS 9

DE\DA-WT-20 1 1/2"=1'-0"

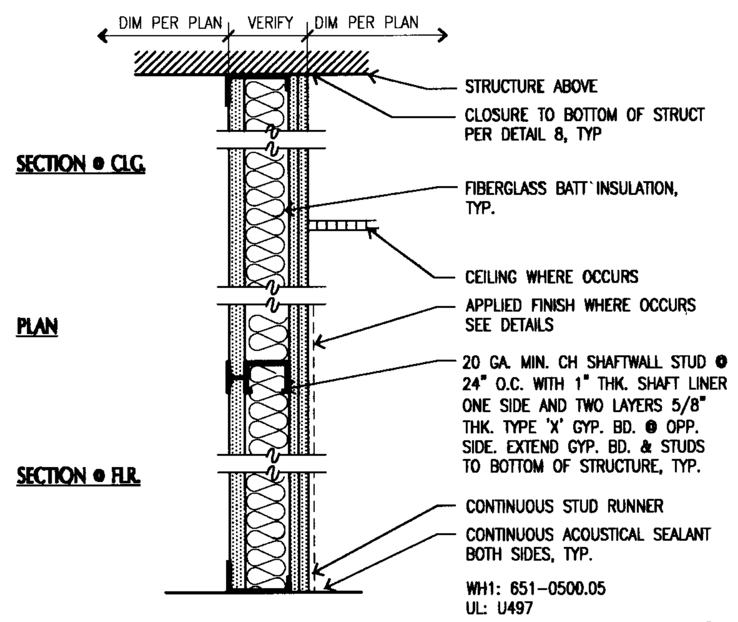

WALL TYPE 4

DE\DA-WT-06 1 1/2"=1'-0"

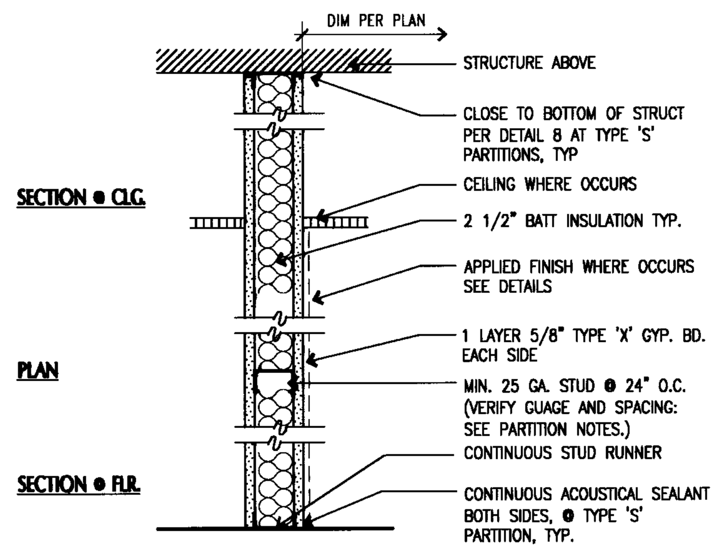

APPROVED
MAY 0 1 2006
BUILDING & SAFETY
CITY OF FONTANA

WALL TYPE 2

DE\DA-WT-02 1 1/2"=1'-0"

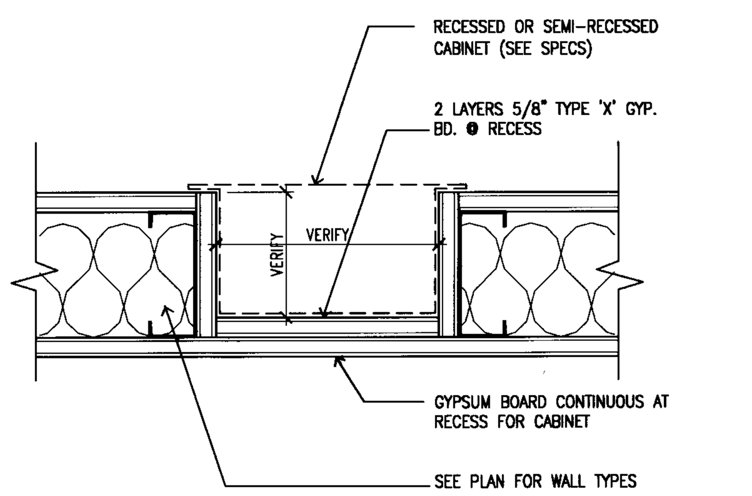

RECESSED WALL CABINET 13

DE\WT-03 3"=1'-0"

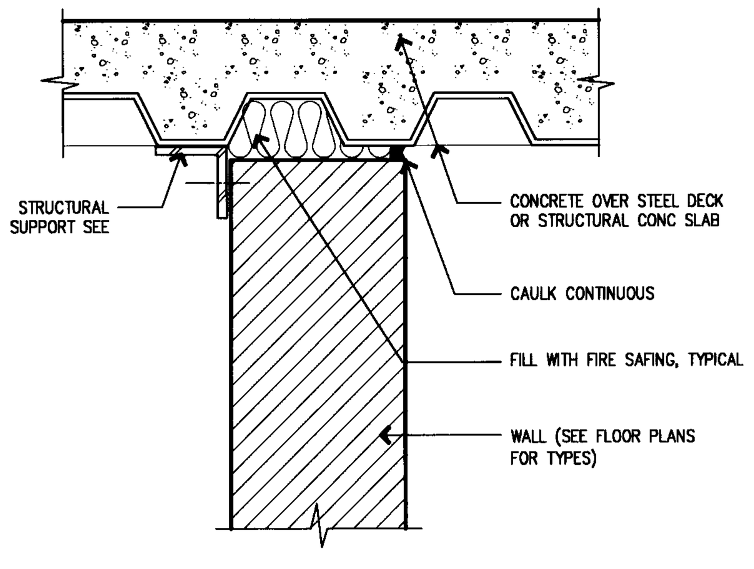

WALL @ SLAB 8

DE\WT-02 3"=1'-0"

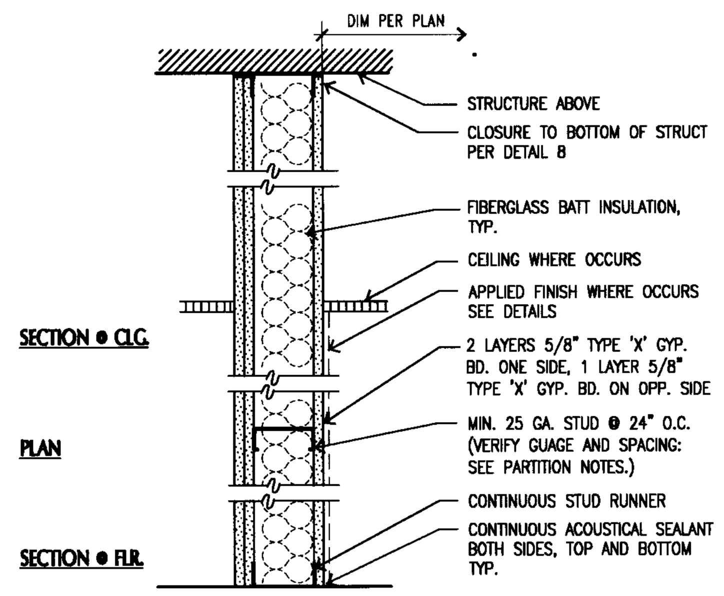

WALL TYPE 3

DE\DA-WT-03 1 1/2"=1'-0"

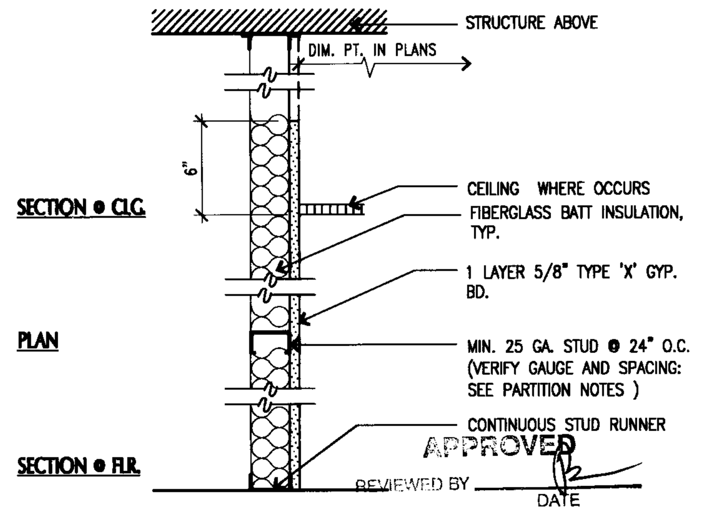

APPROVED
REVIEWED BY ______ DATE
Approval of these plans shall not be construed to be a permit for, or an approval of any violation of any of the provisions of the state or local laws.

WALL TYPE 1

DE\DA-WT-01 1 1/2"=1'-0"

LANGDON WILSON
ARCHITECTURE
PLANNING
INTERIORS

18800 VON KARMAN AVENUE, SUITE 200
IRVINE, CALIFORNIA 92612-1517
949 - 833 - 9193

STRUCTURAL
KPFF 949 - 252 - 1022
MECHANICAL
TKSC 949 - 756 - 0565
ELECTRICAL
GLP 714 - 751 - 1851
LANDSCAPE
FRANK RADMACHER 714 - 832 - 1774
CIVIL ENGINEER
IKE CONSULTING 714 - 241 - 0606
AUDIO / VISUAL
VENEKLASEN ASSOCIATES 310 - 450 - 1733
DATA TELEPHONE
PLANNET CONSULTING 714 - 982 - 5800

CITY OF FONTANA
DEVELOPMENT SERVICES
ORGANIZATION BUILDING
8353 SIERRA AVENUE FONTANA, CALIFORNIA

REV.	DATE	ISSUED FOR	REV.	DATE	ISSUED FOR
	10-17-05	DD PACKAGE			
	12-05-05	PLAN CHECK			
	02-06-06	PC RESUBMIT.			
	04-17-06	PERMIT SET			
	04-17-06	BID SET			

Stamp
LICENSED ARCHITECT JON PATRICK ALLEN NO. C7181 REN. 03-31-07 STATE OF CALIFORNIA

DATE: 11/01/05 SCALE: -
DRAWN BY: SCT
JOB NO. L454-000 CADD TITLE: A830
SHEET TITLE:
WALL TYPES AND DETAILS
SHEET NUMBER:
A830

©Copyright 2005 Langdon Wilson

PERMIT SET / BID SET 04-17-06

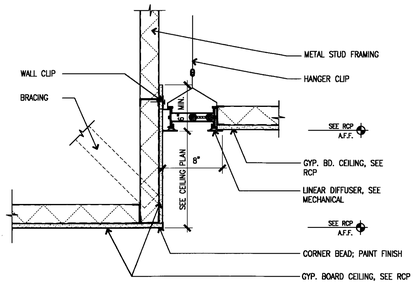

10 CEILING DIFFUSER 5

DE\CLG-06 1 1/2"=1'-0"

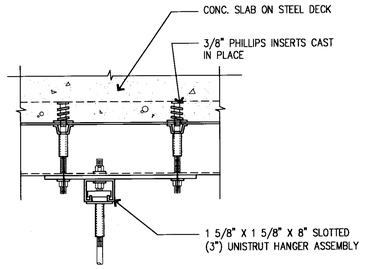

STL DECK ANCHOR

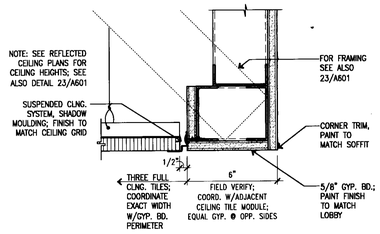

SOFFIT AT "BRIDGE" 14

DE/CLG14 3" = 1'-0"

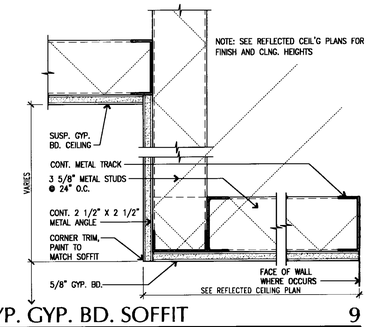

TYP. GYP. BD. SOFFIT 9

DE\CLG-07 3"=1'-0"

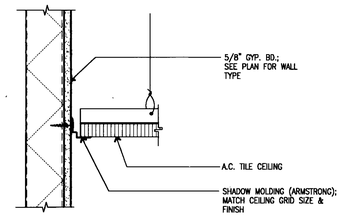

ACOUSTIC CEILING EDGE DETAIL 4

DE/CLG18 3" = 1'-0"

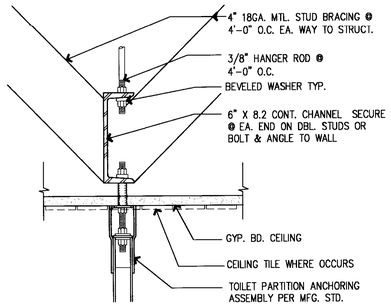

CLG. HUNG DETAIL

PARTITION CONNECTION 18

DE\PARTIT 3"=1'-0"

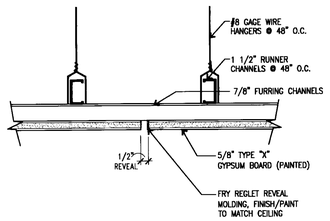

CEILING TRANSITION 13

DE/CLG13 3" = 1'-0"

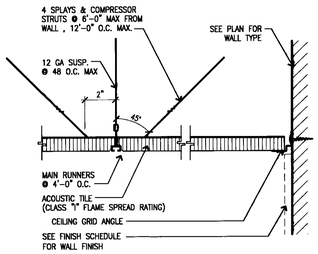

SUSPENDED ACOUSTIC CLG. 8

DE\CLG-01 3" = 1'-0"

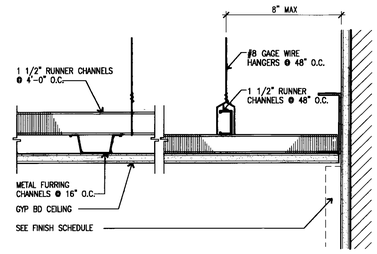

SUSPENDED GYP BD CLG. 3

DE\CLG-02 3" = 1'-0"

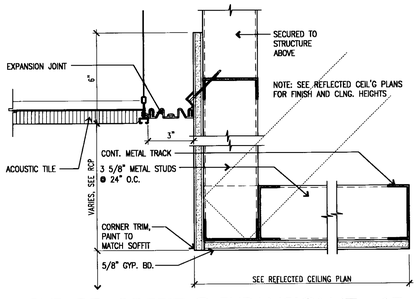

GYP. BD. SOFFIT @ EXPANSION JT. 17

DE\CLG-05 3"=1'-0"

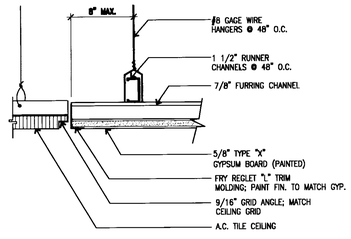

CEILING MATERIAL TRANSITION 12

DE/CLG12 3" = 1'-0"

GENERAL NOTES:

1. AT CHANNEL SPLICES, INTERLOCK FLANGES, OVERLAP ENDS 12" AND SECURE EACH END WITH DOUBLE STRAND 18 GA. TIE WIRE.
2. SEE SPEC'S. FOR OTHER REQUIREMENTS – SYSTEM DESIGN PER U.S.G. GYP. CONST. HANDBOOK.
3. A STRUT FASTENED TO THE MAIN RUNNER SHALL BE EXTENDED TO AND FASTENED TO THE STRUCTURAL MEMBERS SUPPORTING THE ROOF OR FLOOR ABOVE. THE STRUT SHALL BE ADEQUATE TO RESIST THE VERTICAL COMPONENT INDUCED BY THE BRACING WIRES. THESE HORIZONTAL RESTRAINT POINTS SHALL BE PLACED 12 FEET ON CENTER IN BOTH DIRECTIONS WITH THE FIRST POINT WITHIN 6 FEET FROM EACH WALL. ATTACHMENT OF THE RESTRAINT WIRES TO THE STRUCTURE ABOVE SHALL BE ADEQUATE FOR THE LOAD IMPOSED.

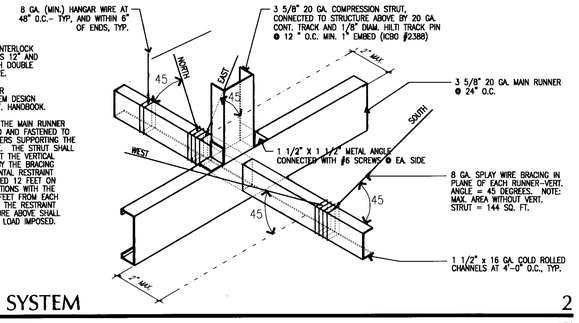

CEILING SUSPENSION SYSTEM 2

DE\CLG-04 NTS

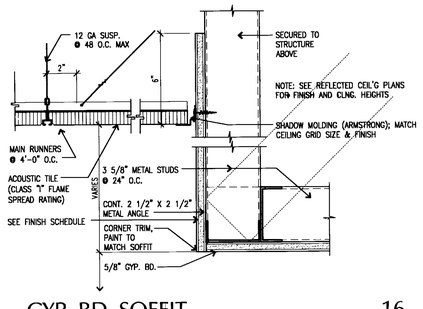

GYP. BD. SOFFIT 16

DE\CLG-11 3"=1'-0"

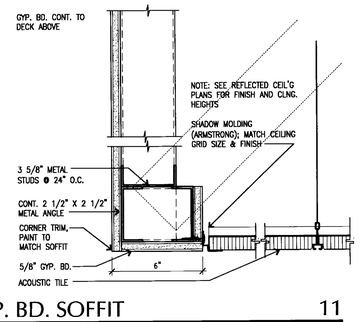

GYP. BD. SOFFIT 11

DE\CLG-28 3"=1'-0"

GENERAL NOTES:

1. A STRUT FASTENED TO THE MAIN RUNNER SHALL BE EXTENDED TO AND FASTENED TO THE STRUCTURAL MEMBERS SUPPORTING THE ROOF OR FLOOR ABOVE. THE STRUT SHALL BE ADEQUATE TO RESIST THE VERTICAL COMPONENT INDUCED BY THE BRACING WIRES. THESE HORIZONTAL RESTRAINT POINTS SHALL BE PLACED 12 FEET ON CENTER IN BOTH DIRECTIONS WITH THE FIRST POINT WITHIN 6 FEET FROM EACH WALL. ATTACHMENT OF THE RESTRAINT WIRES TO THE STRUCTURE ABOVE SHALL BE ADEQUATE FOR THE LOAD IMPOSED.
2. ALL LIGHT FIXTURES TO HAVE 2 SLACK WIRES.
3. SUSPENDED CEILINGS SHALL COMPLY WITH UBC TABLE 25–A AND 16–0

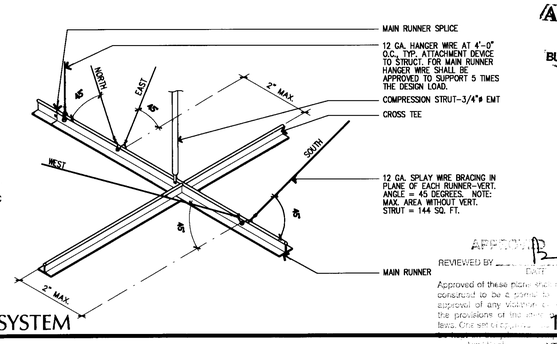

CEILING SUSPENSION SYSTEM 1

DE\CLG-03 NTS

APPROVED
REVIEWED BY
Approved of these plans shall not be construed to be a permit to violate any provisions of any Ordinance or of the provisions of the state building laws. Other permits may be required before work can begin.
BUILDING & SAFETY DIVISION

LANGDON WILSON
ARCHITECTURE
PLANNING
INTERIORS

18800 VON KARMAN AVENUE, SUITE 200
IRVINE, CALIFORNIA 92612-1517
949 - 833 - 9193

STRUCTURAL
KPFF 949 - 252 - 1022
MECHANICAL
TISC 949 - 756 - 0565
ELECTRICAL
GLP 714 - 751 - 1851
LANDSCAPE
FRANK RADMACHER 714 - 832 - 1774
CIVIL ENGINEER
IKE CONSULTING 714 - 241 - 0606
AUDIO / VISUAL
VENEKLASEN ASSOCIATES 310 - 450 - 1733
DATA TELEPHONE
PLANNET CONSULTING 714 - 982 - 5800

CITY OF FONTANA
DEVELOPMENT SERVICES
ORGANIZATION BUILDING
8353 SIERRA AVENUE FONTANA, CALIFORNIA

REV.	DATE	ISSUED FOR	REV.	DATE	ISSUED FOR
	10-17-05	DD PACKAGE			
	12-05-05	PLAN CHECK			
	02-06-06	PC RESUBMIT.			
	04-17-06	PERMIT SET			
	04-17-06	BID SET			

Stamp

LICENSED ARCHITECT JON PATRICK ALLEN NO. C7181 REN. 03-31-07 STATE OF CALIFORNIA

DATE: 11/01/05 SCALE: AS NOTED
DRAWN BY: SCT
JOB NO. L454-000 CADD TITLE: A910

SHEET TITLE:
TYPICAL CEILING DETAILS

SHEET NUMBER:
A910

©Copyright 2005 Langdon Wilson

PERMIT SET / BID SET 04-17-06

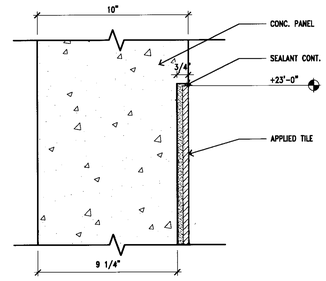

TILE JOINT @ CONC. PANEL 25
DE\IW-19 3"=1'-0"

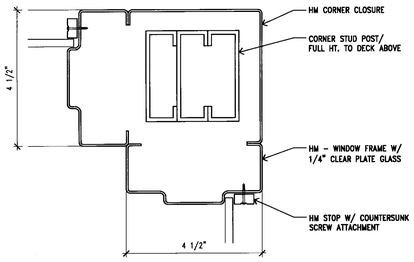

WINDOW @ ROOM 116 20
WINWAL6 6"=1'-0"

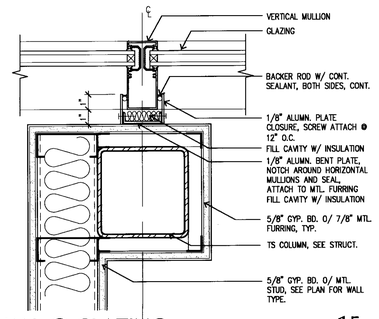

WALL @ GLAZING 15
WINWAL2 3"=1'-0"

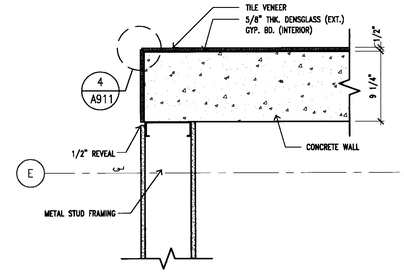

CONCRETE WALL ENCLOSURE 10
DE\IW-10 1 1/2"=1'-0"

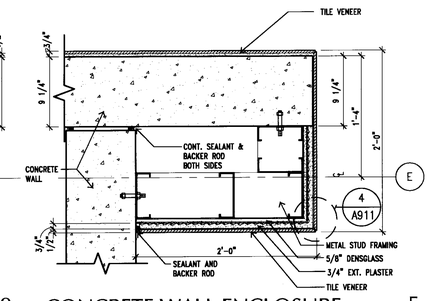

CONCRETE WALL ENCLOSURE 5
DE\IW-05 1 1/2"=1'-0"

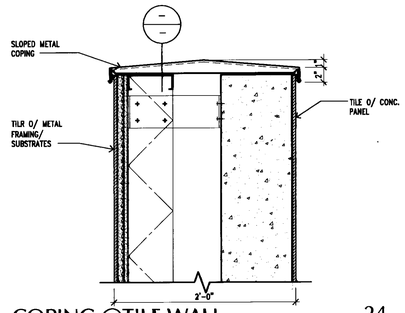

COPING @TILE WALL 24
DE\IW-18 1 1/2"=1'-0"

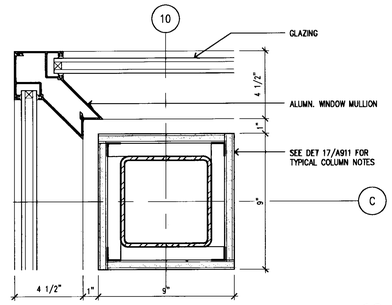

COLUMN @ GLAZING 19
WINWAL5 3"=1'-0"

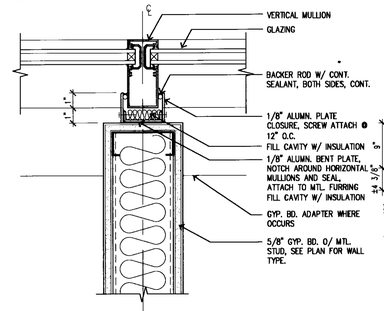

WALL @ GLAZING 14
WINWAL1 3"=1'-0"

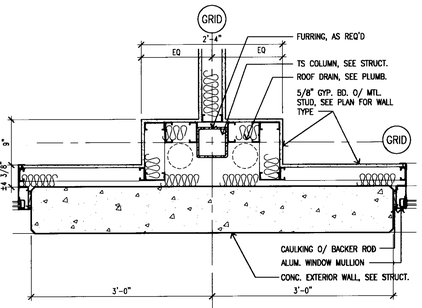

WALL DETAIL 9
DE\IW-06 1"=1'-0"

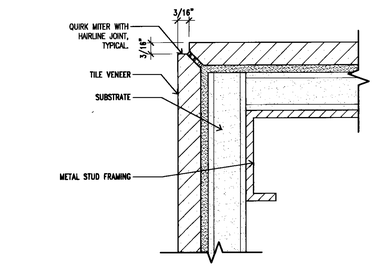

TILE JOINT DETAIL 4
DE\IW-04 FULL

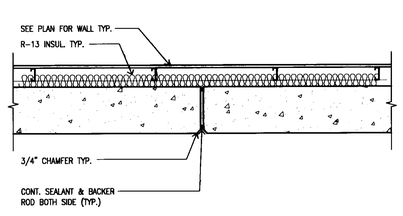

PANEL JOINT (SIM @ PARAPET) 23
DE\IW-17 1"=1'-0"

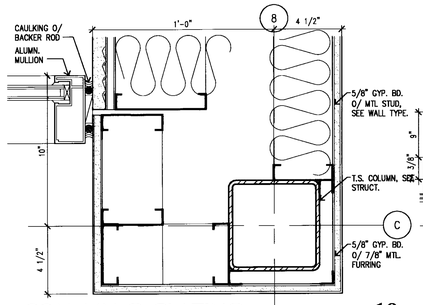

COLUMN @ GLAZING 18
WINWAL4 3"=1'-0"

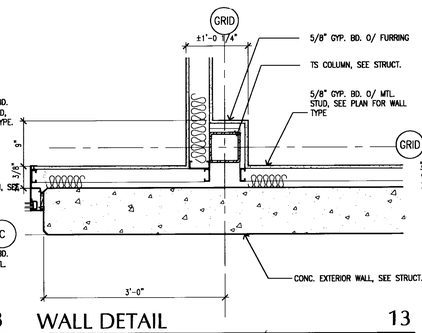

WALL DETAIL 13
DE\IW-13 1"=1'-0"

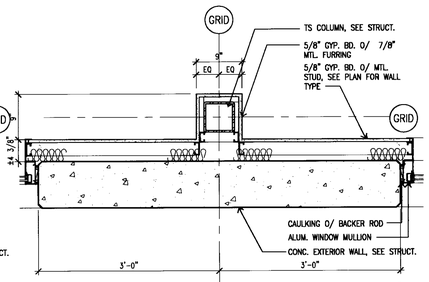

WALL DETAIL 8
DE\IW-07 1"=1'-0"

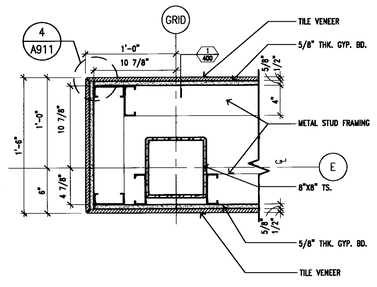

COLUMN ENCLOSURE 3
DE\IW-03 1 1/2"=1'-0"

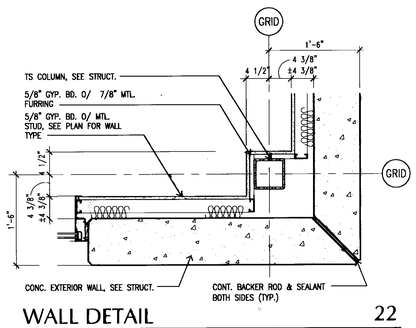

WALL DETAIL 22
DE\IW-16 1"=1'-0"

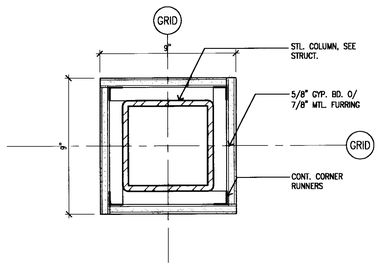

COLUMN DETAIL, TYP 17
DE\IW-15 3"=1'-0"

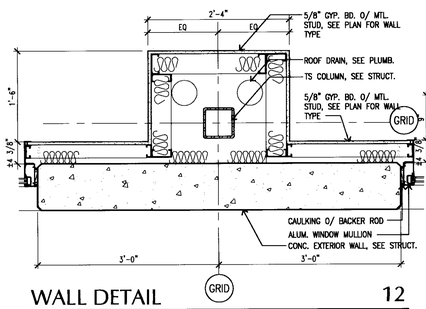

WALL DETAIL 12
DE\IW-12 1"=1'-0"

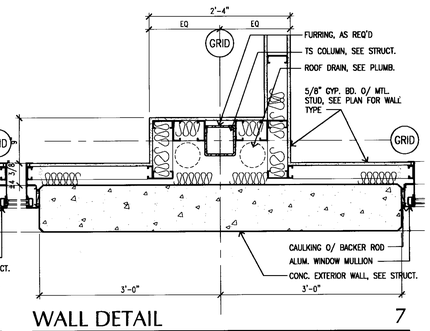

WALL DETAIL 7
DE\IW-08 1"=1'-0"

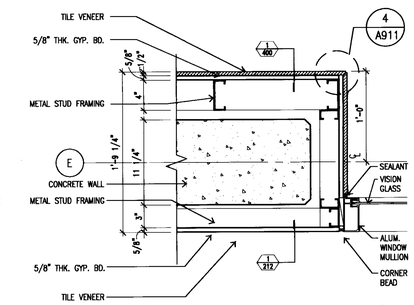

CONCRETE WALL ENCLOSURE 2
DE\IW-02 1 1/2"=1'-0"

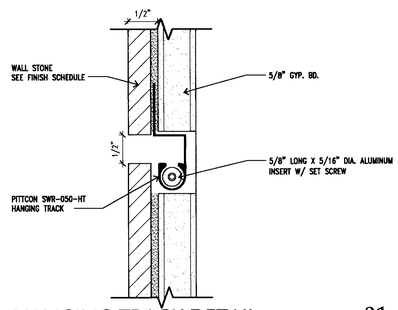

HANGING TRACK DETAIL 21
DE\IW-14 FULL

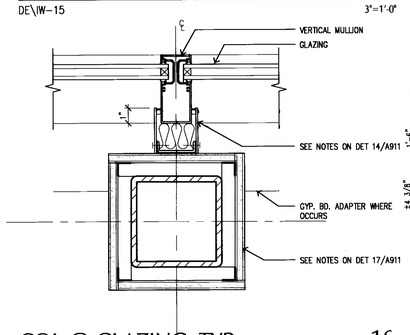

COL @ GLAZING, TYP. 16
WINWAL3 3"=1'-0"

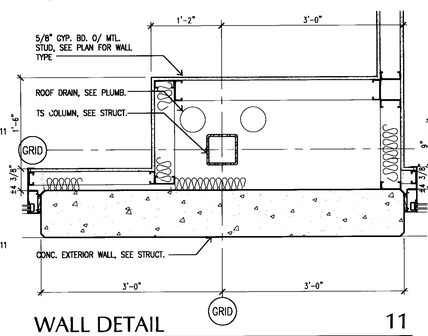

WALL DETAIL 11
DE\IW-11 1"=1'-0"

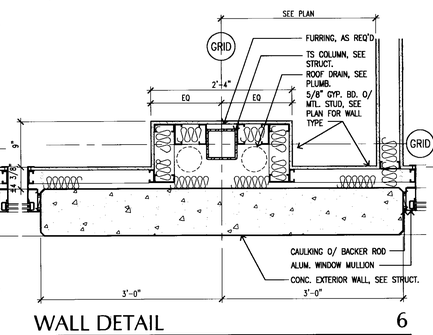

WALL DETAIL 6
DE\IW-09 1"=1'-0"

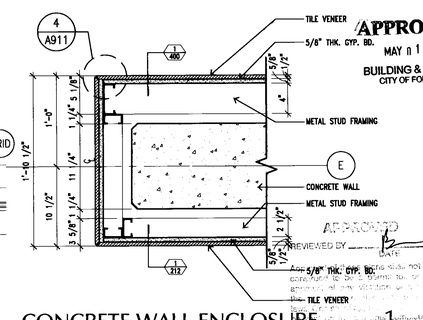

CONCRETE WALL ENCLOSURE 1
DE\IW-01 1 1/2"=1'-0"

LANGDON WILSON
ARCHITECTURE
PLANNING
INTERIORS

18800 VON KARMAN AVENUE, SUITE 200
IRVINE, CALIFORNIA 92612-1517
949 - 833 - 9193

STRUCTURAL
KPFF 949 - 252 - 1022
MECHANICAL
TKSC 949 - 756 - 0565
ELECTRICAL
GLP 714 - 751 - 1851
LANDSCAPE
FRANK RADMACHER 714 - 832 - 1774
CIVIL ENGINEER
IKE CONSULTING 714 - 241 - 0606
AUDIO / VISUAL
VENEKLASEN ASSOCIATES 310 - 450 - 1733
DATA TELEPHONE
PLANNET CONSULTING 714 - 982 - 5800

CITY OF FONTANA
DEVELOPMENT SERVICES
ORGANIZATION BUILDING
8353 SIERRA AVENUE FONTANA, CALIFORNIA

REV.	DATE	ISSUED FOR	REV.	DATE	ISSUED FOR
	12-05-05	PLAN CHECK			
	02-06-06	PC RESUBMIT.			
	04-17-06	PERMIT SET			
	04-17-06	BID SET			

Stamp

LICENSED ARCHITECT JON PATRICK ALLEN NO. C7181 EXPIRES 03-31-07 STATE OF CALIFORNIA

APPROVED
MAY 11 2006
BUILDING & SAFETY
CITY OF FONTANA

APPROVED
REVIEWED BY ____ DATE

DATE:
SCALE: AS SHOWN
DRAWN BY:
JOB NO. L454-000
CADD TITLE A911

SHEET TITLE:
WALL DETAILS

SHEET NUMBER:
A911

©Copyright 2005 Langdon Wilson

PERMIT SET / BID SET 04-17-06

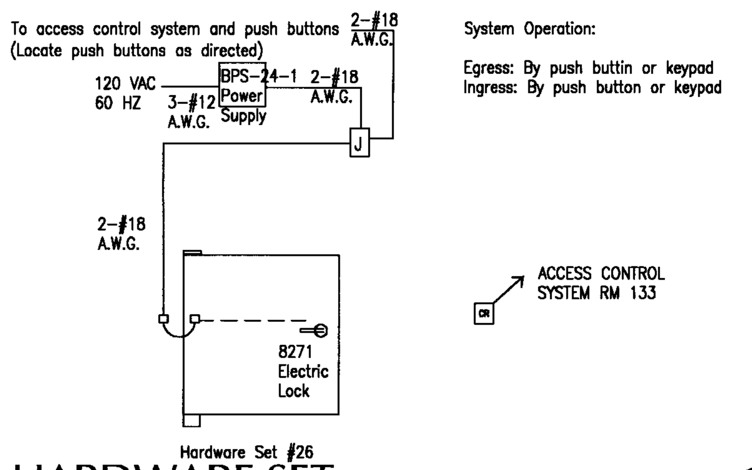

Hardware Set #26

HARDWARE SET 17

HW-06 NOT TO SCALE

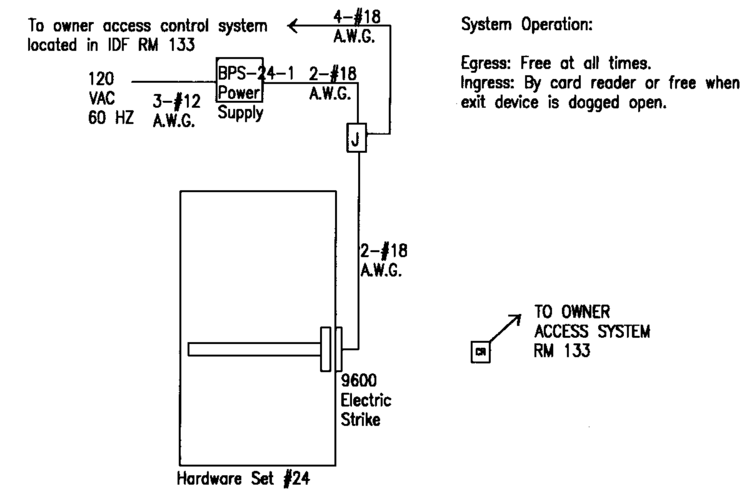

Hardware Set #24

HARDWARE SET 16

HW-05 NOT TO SCALE

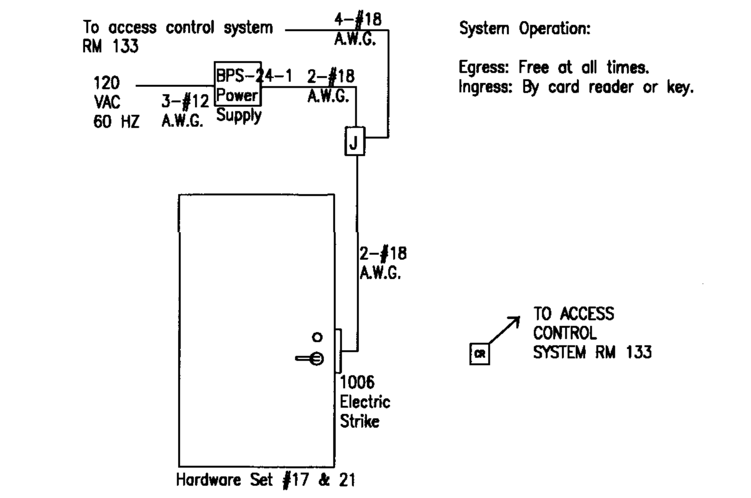

Hardware Set #17 & 21

HARDWARE SET 15

HW-04 NOT TO SCALE

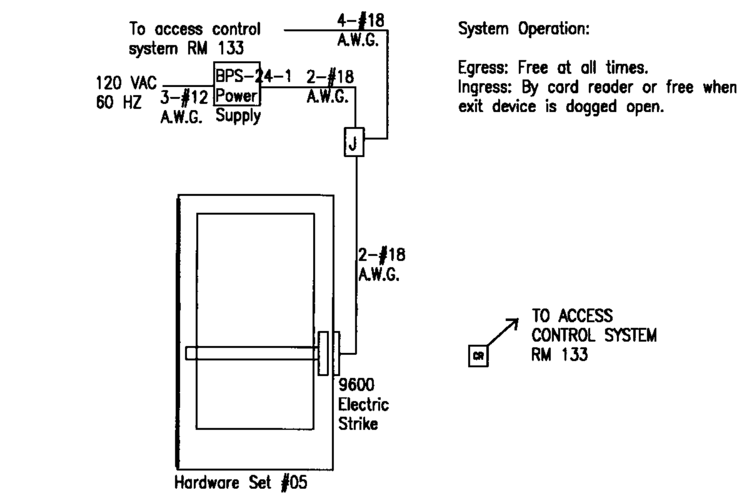

Hardware Set #05

HARDWARE SET 14

HW-03 NOT TO SCALE

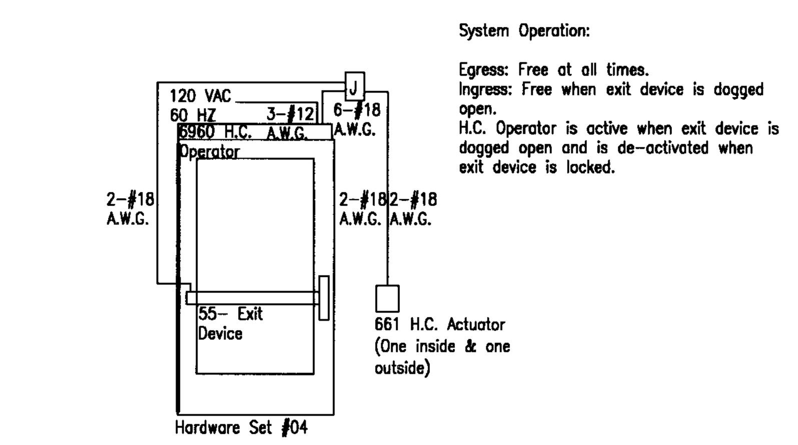

Hardware Set #04

HARDWARE SET 13

HW-02 NOT TO SCALE

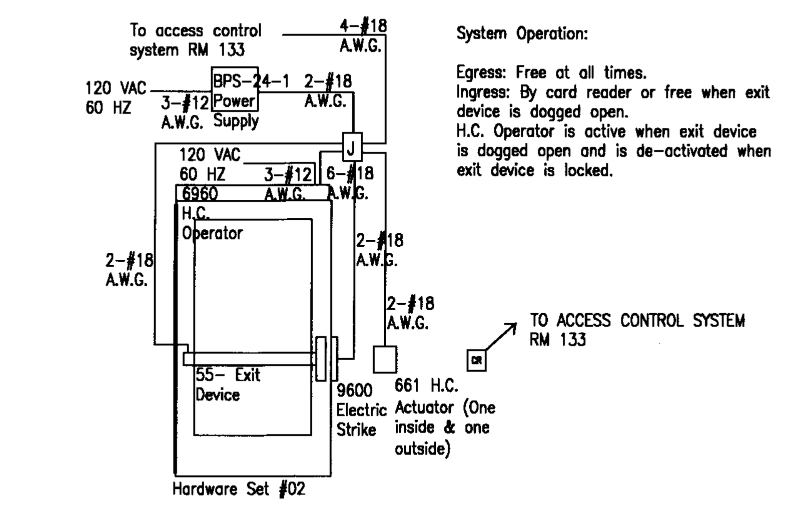

Hardware Set #02

HARDWARE SET 12

HW-01 NOT TO SCALE

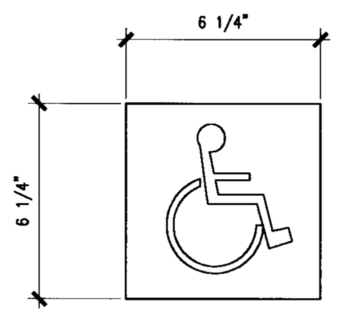

ACCESSIBILITY SYMBOL 11

DE\ACC-11 SCALE: 3"=1'-0"

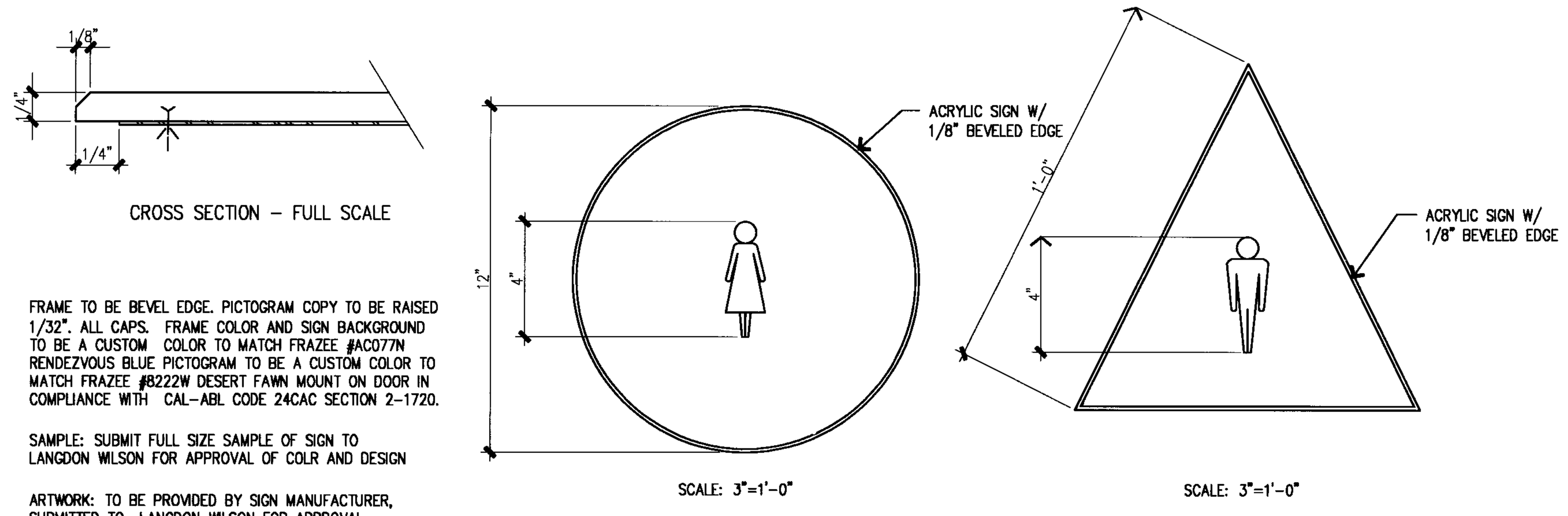

FRAME TO BE BEVEL EDGE. PICTOGRAM COPY TO BE RAISED 1/32". ALL CAPS. FRAME COLOR AND SIGN BACKGROUND TO BE A CUSTOM COLOR TO MATCH FRAZEE #AC077N RENDEZVOUS BLUE PICTOGRAM TO BE A CUSTOM COLOR TO MATCH FRAZEE #8222W DESERT FAWN MOUNT ON DOOR IN COMPLIANCE WITH CAL-ABL CODE 24CAC SECTION 2-1720.

SAMPLE: SUBMIT FULL SIZE SAMPLE OF SIGN TO LANGDON WILSON FOR APPROVAL OF COLR AND DESIGN

ARTWORK: TO BE PROVIDED BY SIGN MANUFACTURER, SUBMITTED TO LANGDON WILSON FOR APPROVAL.

GEOMETRIC SYMBOL - MALE/FEMALE 5

DE\ACC-08 SCALE: AS NOTED

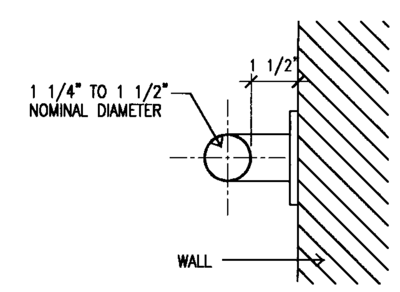

GRAB BAR DETAIL 4

DE\ACC-03 3"=1'-0"

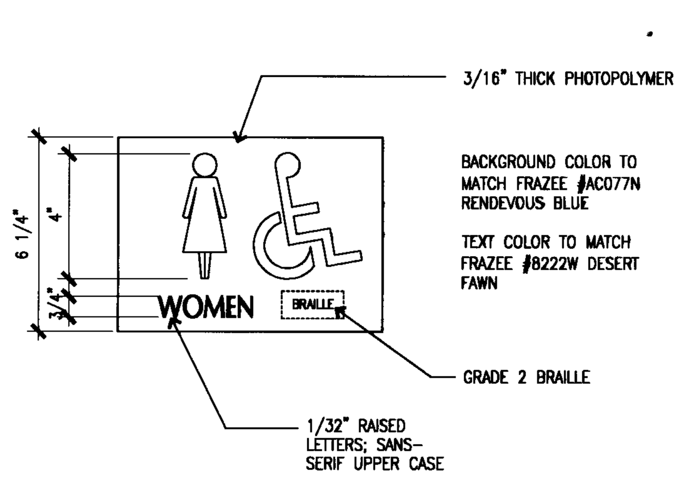

TOILET ROOM SIGN 10

DE\ACC-05 SCALE: 3"=1'-0"

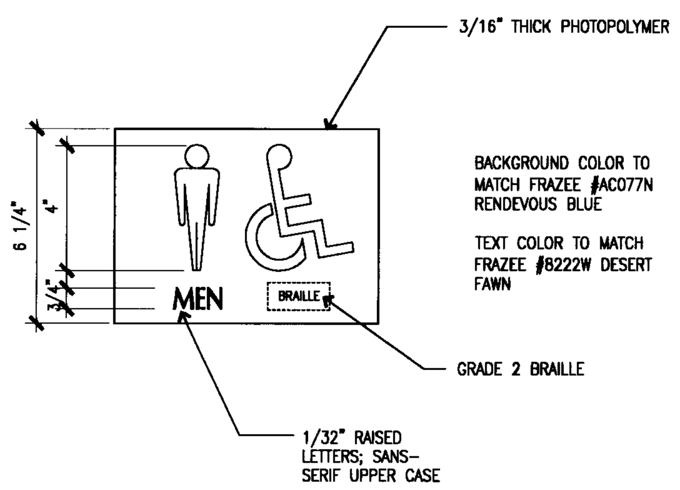

TOILET ROOM SIGN 8

DE\ACC-06 SCALE: 3"=1'-0"

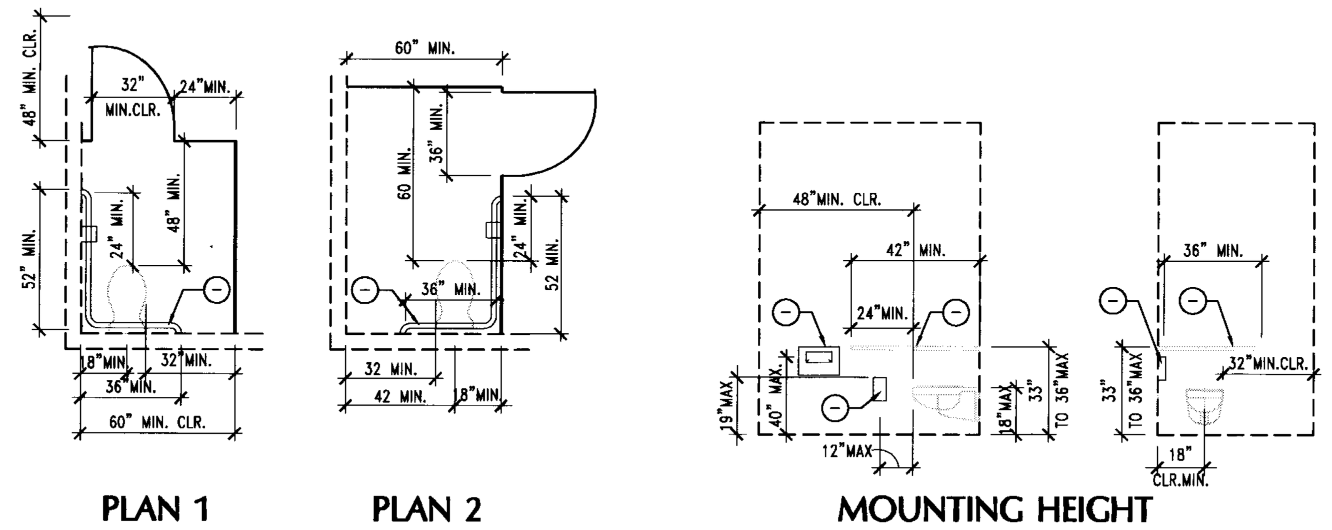

ACCESSIBLE TOILET STALL 3

DE\ACC-01 1/4"=1'-0"

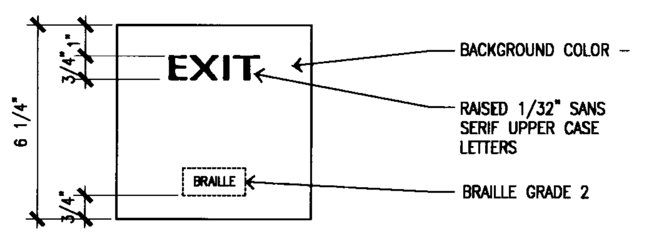

SIGNAGE TEXT
9A - EXIT
9B - EXIT ROUTE
9C - EXIT STAIR DOWN
MOUNT SIGNS AT +60" TO ℄ OF SIGN

TACTILE EXIT SIGNAGE 9

DE\ACC-09 SCALE: 3"=1'-0"

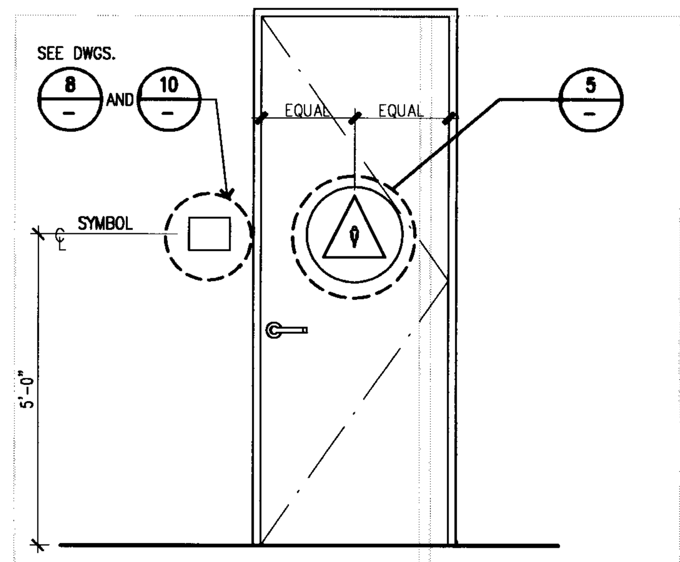

RESTROOM ENTRY SIGN 7

DE\ACC-07 SCALE: 1/2"=1'-0"

NOTES:
1. WATER STREAM PARALLEL TO FRONT EDGE AND 4" HIGH, MIN.
2. 5lb. MAX. FORCE NEEDED TO ACTIVATE CONTROLS

CBC SECTION 511.1 (c) AND CPC SECTION 1507

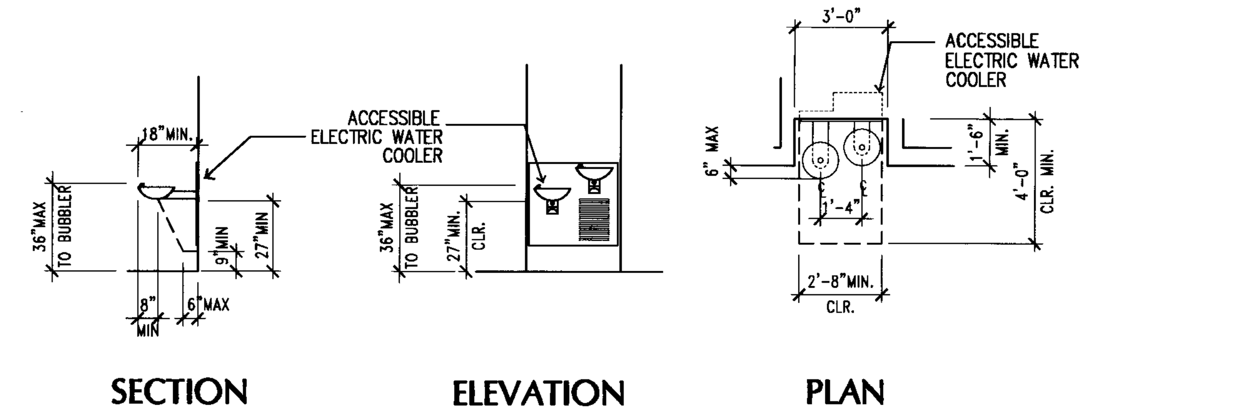

DRINKING FOUNTAIN DETAIL 2

DE\ACC-04 1/4"=1'-0"

TOILET ACCESSORY LEGEND

BL\ACC-LEG.dwg

NOTES:
1) ALL TOILET ROOM ACCESSORIES SPECIFIED BELOW TO BE 'BOBRICK' PRODUCTS (UNLESS NOTED OTHERWISE)
2) SEE ALSO A920 ACCESSORY LEGEND & MOUNTING HEIGHT

KEY	MANUF.	MODEL #	DESCRIPTION
1	BOBRICK	B-357	PARTITION MOUNTED TOILET SEAT COVER, NAPKIN DISPOSAL & TISSUE DISPENSER - SERVES 2 TOILET COMPARTMENTS
2	BOBRICK	B-3571	PARTITION MOUNTED TOILET SEAT COVER, NAPKIN DISPOSAL & TISSUE DISPENSER - SERVES 2 TOILET COMPARTMENTS, HC
3	BOBRICK	B-3574	RECESSED TOILET SEAT COVER, NAPKIN DISPOSAL & TISSUE DISPENSER
4	BOBRICK	B-3471	PARTITION MOUNTED TOILET SEAT COVER & TISSUE DISPENSER - SERVES 2 TOILET COMPARTMENTS, HC
5	BOBRICK	B-3474	RECESSED TOILET SEAT COVER & TISSUE DISPENSER
6	BOBRICK	B-3644	RECESSED WASTE RECEPTACLE
7	BOBRICK	B-3861	RECESSED ROLL PAPER TOWEL DISPENSER
8	BOBRICK	B-39601	RECESSED ROLL PAPER TOWEL DISPENSER & WASTE RECEPTACLE
9	BOBRICK	B-352 25	RECESSED NAPKIN/TAMPON VENDOR
10	BOBRICK	B-822	LAVATORY MOUNTED SOAP DISPENSER
11	BOBRICK	B-290	FRAMED MIRROR
12	BOBRICK	B-293	UTILITY SHELF WITH MOP/BROOM HOLDER & RAG HOOKS
13	BOBRICK	B-68137 B-6806	CORNER GRAB BAR; 1-1/2" DIA. SATIN S.S.; CONCEALED MOUNTING WITH SNAP FLANGE
14	TRESPA		TOILET PARTITION; CEILING MOUNTED; SOLID PHENOLIC; SEE FINISH MATERIALS SCHEDULE A810
15	TRESPA		URINAL SCREEN; WALL MOUNTED; SOLID PHENOLIC; SEE FINISH MATERIALS SCHEDULE A810

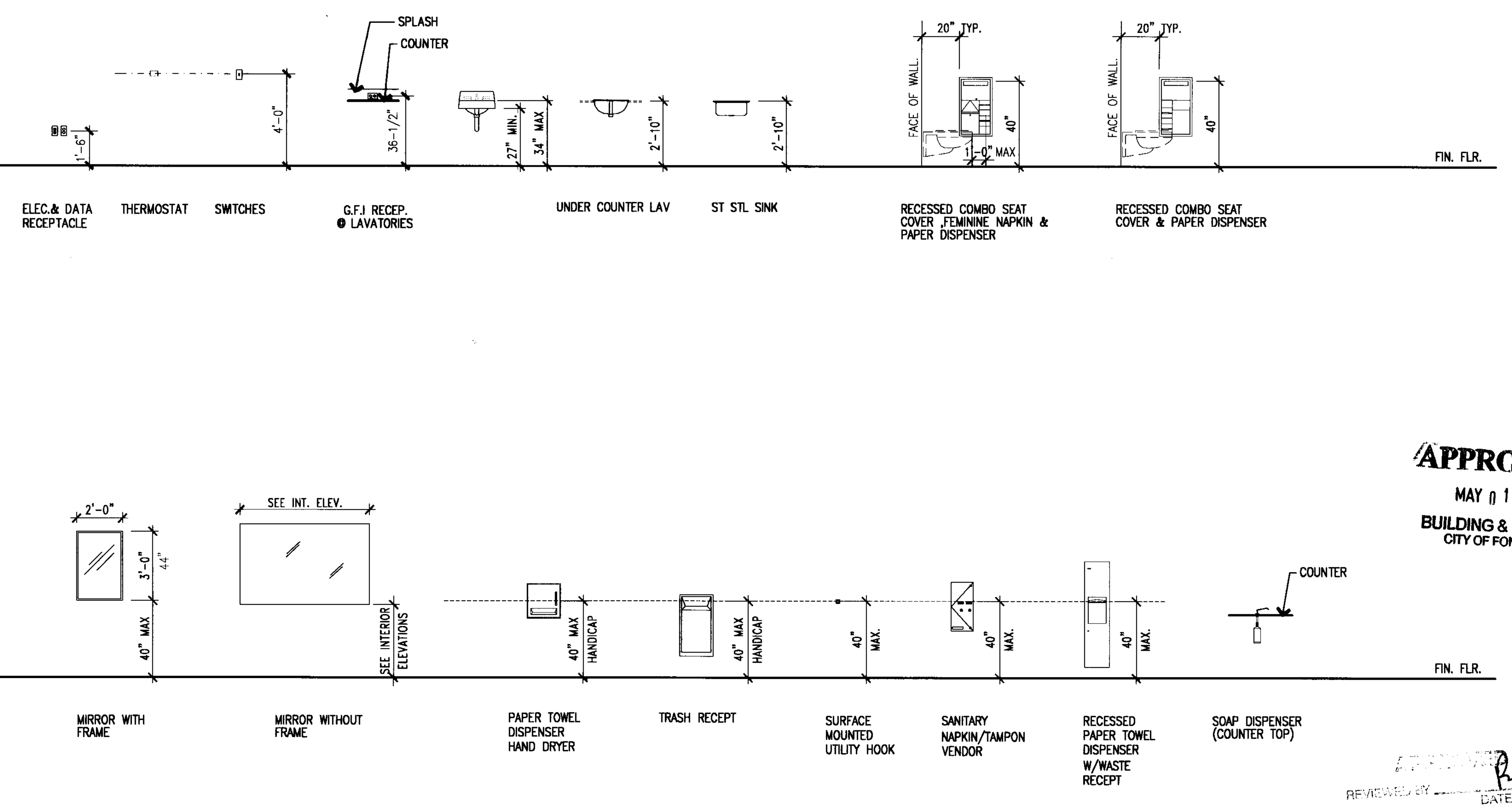

APPROVED
MAY 0 1 2006
BUILDING & SAFETY
CITY OF FONTANA

REVIEWED BY ______ DATE
Approval of these plans shall not be construed to be a permit for, or an approval of any violation of any of the provisions of the state or local laws. One set of approved plans must be kept on the job until completion.

ACCESSORY LEGEND AND MOUNTING HEIGHT 1

DE\ACC-02 1/4"=1'-0"

LANGDON WILSON
ARCHITECTURE PLANNING INTERIORS
18800 VON KARMAN AVENUE, SUITE 200
IRVINE, CALIFORNIA 92612-1517
949 - 833 - 9193

STRUCTURAL
KPFF 949 - 252 - 1022
MECHANICAL
TKSC 949 - 756 - 0565
ELECTRICAL
GLP 714 - 751 - 1851
LANDSCAPE
FRANK RADMACHER 714 - 832 - 1774
CIVIL ENGINEER
IKE CONSULTING 714 - 241 - 0606
AUDIO / VISUAL
VENEKLASEN ASSOCIATES 310 - 450 - 1733
DATA TELEPHONE
PLANNET CONSULTING 714 - 982 - 5800

CITY OF FONTANA
DEVELOPMENT SERVICES ORGANIZATION BUILDING
8353 SIERRA AVENUE FONTANA, CALIFORNIA

CITY OF FONTANA CALIFORNIA

REV.	DATE	ISSUED FOR	REV.	DATE	ISSUED FOR
	10-17-05	DD PACKAGE			
	12-05-05	PLAN CHECK			
	02-06-06	PC RESUBMIT.			
	03-13-06	PC#2 RESUBMIT.			
	04-17-06	PERMIT SET			
	04-17-06	BID SET			

Stamp
LICENSED ARCHITECT JON PATRICK ALLEN NO. C7181 REN. 03-31-07 STATE OF CALIFORNIA

DATE 11/01/05 SCALE 1/8"=1'-0"
DRAWN BY: SCT
JOB NO. L454-000 CADD TITLE: A920

SHEET TITLE:
INTERIOR DETAILS

SHEET NUMBER:
A920

©Copyright 2005 Langdon Wilson

PERMIT SET / BID SET 04-17-06

STRUCTURAL NOTES

SPECIAL INSPECTIONS

1. THE FOLLOWING ELEMENTS OF CONSTRUCTION SHALL HAVE CONTINUOUS AND/OR PERIODIC INSPECTION IN A ACCORDANCE WITH SECTION 1701 OF THE CODE AND ANY ADDITIONAL REQUIREMENTS STATED IN THE DRAWINGS OR SPECIFICATIONS. THE INSPECTIONS SHALL BE PERFORMED BY A BUILDING INSPECTOR APPROVED BY THE CITY OF FONTANA, CALIFORNIA.

   A. CONCRETE:
   PROVIDE INSPECTIONS DURING THE TAKING OF TEST SPECIMENS AND PLACING OF REINFORCED CONCRETE AND AT ALL BUILDING FOUNDATIONS.

   B. BOLTS INSTALLED IN CONCRETE:
   PROVIDE INSPECTIONS PRIOR TO AND DURING THE PLACEMENT OF CONCRETE AROUND BOLTS.

   C. PLACING OF REINFORCING STEEL:
   PROVIDE PERIODIC INSPECTIONS FOR CONFORMANCE WITH THE APPROVED PLANS PRIOR TO CLOSING FORMS OR THE DELIVERY OF CONCRETE TO THE JOB SITE.

   D. STRUCTURAL WELDING:
   VERIFY THE MATERIALS, QUALIFICATIONS OF WELDING PROCEDURES AND WELDERS PRIOR TO THE START OF WORK AND PROVIDE PERIODIC INSPECTIONS OF WORK IN PROGRESS AND A VISUAL INSPECTION OF ALL WELDS (INCLUDING WELDING OF METAL FLOOR AND ROOF DECK) PRIOR TO COMPLETION OF WORK. INSPECTION IS NOT REQUIRED FOR WELDING DONE IN AN APPROVED FABRICATOR'S SHOP. SPECIAL INSPECTION IS REQUIRED FOR ALL FIELD WELDING.

   E. HIGH STRENGTH BOLTING:
   PROVIDE PERIODIC INSPECTIONS TO INSURE THAT THE PLIES OF THE CONNECTED ELEMENTS HAVE BEEN BROUGHT INTO SNUG CONTACT.

   F. STRUCTURAL MASONRY:
   PROVIDE INSPECTIONS DURING PREPARATION AND TAKING OF ANY REQUIRED PRISMS OR TEST SPECIMENS, AT THE START OF LAYING UNITS, AFTER THE PLACEMENT OF REINFORCING STEEL, GROUT SPACE PRIOR TO EACH GROUTING OPERATION, AND DURING ALL GROUTING OPERATIONS.

   G. EXPANSION AND EPOXY ANCHORS:
   PROVIDE CONTINUOUS INSPECTION DURING THE INSTALLATION.

TILT-UP CONCRETE PANELS

1. PRECAST CONCRETE BEARING WALLS ARE INTENDED TO BE CAST DIRECTLY ON THE CONCRETE SLAB-ON-GRADE OR ON CONSTRUCTED WASTE SLABS AND ERECTED BY THE TILT-UP PANEL METHOD.
2. THE CASTING SURFACE FOR THE PRECAST PANELS SHALL BE SMOOTH AND FREE FROM BLEMISHES OR JOINTS.
3. SURFACE ADHESION BETWEEN THE PANEL AND THE SLAB-ON-GRADE SHALL BE PREVENTED BY AN APPLIED NON-STAINING BOND BREAKING LIQUID AS MANUFACTURED BY HUNT OR AN APPROVED EQUAL. APPLY IN STRICT ACCORDANCE WITH MANUFACTURERS RECOMMENDATIONS.
4. CONTRACTOR SHALL VERIFY ALL DIMENSIONS AND FIELD CONDITIONS PRIOR TO POURING CONCRETE FOR FOOTINGS AND PANELS.
5. CONTRACTOR SHALL LOCATE ALL OPENINGS IN PANELS FROM THE ARCHITECTURAL, MECHANICAL & ELECTRICAL DRAWINGS.
6. SEE ARCHITECTURAL DRAWINGS FOR ALL DESIGN REVEALS AND FORMLINERS.
7. CONTRACTOR SHALL BE RESPONSIBLE FOR THE DESIGN AND PLACEMENT OF ALL LIFTING POINTS, ADDITIONAL REINFORCEMENT, AND STRONGBACKS REQUIRED TO ADEQUATELY TILT THE PANELS. THE LIFT DESIGN SHALL BE BASED ON THE STRENGTH OF THE CONCRETE SPECIFIED, AS EXPECTED AT THE TIME OF THE LIFT.
8. CONTRACTOR SHALL BE RESPONSIBLE FOR TEMPORARY BRACING REQUIRED FOR PRECAST PANELS PRIOR TO CONNECTION OF ALL SUPPORTING ELEMENTS.
9. CONTRACTOR SHALL PREPARE SHOP DRAWINGS OF ALL PRECAST CONCRETE ELEMENTS SHOWING ALL DETAILED DIMENSIONS, STRONG BACKS AS REQUIRED, AS WELL AS ANY ADDITIONAL REINFORCING REQUIRED TO ERECT THE PANELS SAFELY AND WITHOUT CRACKING.
10. PANELS SHALL NOT BE LIFTED UNTIL CONCRETE HAS ATTAINED 75% OT THE REQUIRED 28 DAY ULTIMATE COMPRESSIVE STRENGTH.
11. DURING ERECTION OF PANELS SUPPORTED BY CONTINUOUS FOOTINGS, THERE MUST BE PADS, SHIMS OR WEDGES NO MORE THAN 6'-0" APART TO PROVIDE UNIFORM LOADING TO THE FOOTING.
12. PANELS SHALL BE IN THEIR FINAL ERECTED POSITION FOR 28 DAYS MINIMUM BEFORE PANEL TO PANEL CONNECTIONS ARE MADE.
13. PANEL JOINTS SHALL BE SEALED WITH BACK-UP ROD AND SEALANT AT EXTERIOR AND INSIDE FACES.
14. CONTINUOUS INSPECTION IS REQUIRED FOR ALL PRECAST PANELS.
15. PANELS ARE DESIGNED IN ACCORDANCE WITH THE PROVISIONS FOR THE MANUFACTURE UNDER PLANT CONTROL CONDITIONS PER UBC 1907, 7.2. PER ACI-318 COMMENTARY SECTION 7.7 ALL JOB SITE PRECAST CONDITIONS MUST BE EQUAL TO THAT NORMALLY EXPECTED IN A PLANT.

STRUCTURAL ENGINEER OF RECORD SITE VISITS:

1. CONTRACTOR SHALL NOTIFY STRUCTURAL ENGINEER FIVE (5) WORKING DAYS PRIOR TO THE FOLLOWING CONSTRUCTION MILESTONES:

   SPREAD FOOTING FOUNDATIONS: AFTER PLACEMENT OF REINFORCING STEEL PRIOR TO PLACING OF CONCRETE.

   TILT-UP PANEL CONSTRUCTION: AFTER PLACEMENT OF REINFORCING STEEL AND EMBEDDED PLATES PRIOR TO PLACING OF CONCRETE.

   METAL DECK FLOOR/ROOF DIAPHRAGM FRAMING: AFTER PLACEMENT OF WELD PRIOR TO PLACING OF CONCRETE FILL.

2. FAILURE TO NOTIFY ARCHITECT/ENGINEER OF ANY CONSTRUCTION MILESTONES MAY RESULT IN CONTRACTOR HAVING TO REMOVE WORK FOR THE PURPOSE OF REVIEW AT CONTRACTOR'S EXPENSE.

HEADED STUDS

1. ALL HEADED STUDS WELDED TO BEAMS OR CONCRETE CONNECTIONS SHALL BE "TRUE-WELD STUDS", DIVISION OF TRU-FIT SCREW CORPORATION, CLEVELAND, OHIO OR "NELSON STUD", TRW FASTENERS AND ASSEMBLIES GROUP, LORAIN, OHIO, OR APPROVED EQUAL.
2. ALL HEADED STUDS SHALL BE AUTOMATICALLY END WELDED IN SHOP OR FIELD WITH EQUIPMENT RECOMMENDED BY MANUFACTURER OF STUDS.
3. STEEL SHEAR STUDS MATERIAL, WELDING AND INSPECTION, SHALL BE IN ACCORDANCE WITH AWS "STRUCTURAL WELDING CODE", AWS D1.1-(LATEST EDITION) SECTION 7. ALL STUDS SHALL BE 3/4" DIAMETER X 5" LONG, SPACED AT 12" O.C. MAXIMUM, UNLESS NOTED OTHERWISE.

DEFERRED APPROVAL ITEMS

THE FOLLOWING LIST OF DESIGN ELEMENTS WILL HAVE A DEFERRED APPROVAL. THE CONTRACTOR IS RESPONSIBLE FOR SUBMITTING STRUCTURAL ENGINEERING CALCULATIONS AND DESIGN OR SHOP DRAWINGS, STAMPED AND SIGNED BY A CALIFORNIA REGISTERED CIVIL OR STRUCTURAL ENGINEER TO THE CITY OF FONTANA FOR REVIEW AND APPROVAL. THE CALCULATIONS AND DRAWINGS SHALL BE COORDINATED WITH THE ARCHITECTS AND ENGINEERS DRAWINGS. THE DESIGN SHALL, AT A MINIMUM, COMPLY WITH THE 2001 CALIFORNIA BUILDING CODE. THE LOADING CRITERIA AND DEFLECTION LIMITS INDICATED IN THESE DOCUMENTS AND THE SPECIFICATIONS SHALL ALSO BE ACCOMODATED. THE CALCULATIONS AND DRAWINGS SHALL BE SUBMITTED TO THE ARCHITECT AND KPFF FOR REVIEW AND APPROVAL PRIOR TO SUBMITTAL TO THE BUILDING DEPARTMENT & SHALL BE APPROVED BY THE BUILDING DEPARTMENT PRIOR TO INSTALLATION. THE TIME TO COMPLETE THIS PROCESS SHALL BE INCORPORATED INTO THE CONTRACTOR'S SCHEDULE.

1. OPEN WEB STEEL JOISTS AND STEEL JOIST GIRDERS.

STRUCTURAL OBSERVATION

KPFF WILL PROVIDE STRUCTURAL OBSERVATION SERVICES AS DEFINED IN THE CODE. SITE VISIT REPORTS WILL BE SUBMITTED IN WRITING TO THE OWNERS REPRESENTATIVE, SPECIAL INSPECTOR AND THE BUILDING OFFICIAL. PERIODIC STRUCTURAL OBSERVATIONS WILL BE MADE AT SIGNIFICANT CONSTRUCTION STAGES AS DEFINED BELOW. THE STRUCTURAL OBSERVATION WILL CONSIST OF A VISUAL OBSERVATION OF THE STRUCTURAL SYSTEM FOR GENERAL CONFORMANCE TO THE APPROVED PLANS AND SPECIFICATIONS. STRUCTURAL OBSERVATION DOES NOT INCLUDE OR WAVE THE RESPONSIBILITY FOR THE INSPECTIONS REQUIRED BY THE CODE. THE CONTRACTOR SHALL PROVIDE KPFF WITH A CONSTRUCTION SCHEDULE SO THAT THE OBSERVATION VISITS CAN BE PLANNED IN ADVANCE.

SPECIAL STEEL REQUIREMENTS (AISC 9TH EDITION)

1. ALL ROLLED STEEL MEMBERS CONFORMING TO ASTM GROUP 4 OR GROUP 5 AND ALL PLATES EXCEEDING 2" IN THICKNESS FOR BUILT UP SECTIONS MUST COMPLY WITH THESE SPECIAL STEEL REQUIREMENTS, U.N.O..
2. ALL MEMBERS BELONGING TO LATERAL FORCE RESISTING FRAMES THAT ARE TO HAVE FULL PENETRATION GROOVE WELDS SHALL BE SUPPLIED WITH CHAPTER 5 NOTCH TESTING IN ACCORDANCE WITH ASTM A6 AS INDICATED AND MODIFIED BY SECTION 2251 A3.1C.
3. ALL SPLICES IN HEAVY SECTIONS BELONGING TO LATERAL FORCE RESISTING FRAMES SHALL COMPLY WITH SECTION 2251.J1.7.
4. BEAM COPES AND WELD ACCESS HOLES SHALL COMPLY WITH SECTION 2251.J1.8.
5. ALL WELD MATERIAL SHALL COMPLY WITH SECTION 2251.J2.6.
6. PRIOR TO WELDING, ALL MEMBERS SHALL BE PREHEATED AS INDICATED IN SECTION 2251.J2.7.
7. THE THERMAL CUTTING OF ALL MEMBERS SHALL COMPLY WITH SECTION 2251.M2.2.

OPEN WEB STEEL JOISTS

1. ALL JOISTS AND JOIST GIRDERS SHALL BE DESIGNED, DETAILED, FABRICATED, AND ERECTED IN ACCORDANCE WITH THE LATEST EDITION OF THE STEEL JOIST INSTITUTE SPECIFICATIONS AND STANDARD ENGINEERING PRACTICE.
2. STEEL JOISTS AND JOIST GIRDERS MANUFACTURER SHALL SUBMIT , PRIOR TO FABRICATION, PLANS, SECTIONS, DETAILS, AND CALCULATIONS SEALED BY A PROFESSIONAL STRUCTURAL ENGINEER REGISTERED IN CALIFORNIA. DRAWINGS AND CALCULATIONS SHALL INCLUDE ALL COMPONENTS SUCH AS CHORDS, WEBS, CAMBER, BRIDGING, CONNECTIONS, BRACES, ETC.
3. UNLESS NOTED, K-SERIES STEEL JOISTS SHALL BE CONNECTED TO STEEL BY 1/8" WELD, 2" EACH SIDE. LONG SPAN STEEL JOISTS SHALL BE CONNECTED TO STEEL BY 3/16" WELD, 3" LONG EACH SIDE.
4. UNLESS NOTED, LH-SERIES STEEL JOISTS SHALL HAVE 5" DEEP BEARING. WHERE STEEL JOIST OR GIRDER SLOPE EXCEEDS 1/4" PER FT., PROVIDE SLOPED BEARING.
5. WHERE 2 1/2" LONG BEARING FOR K-SERIES JOISTS AND 4" LONG BEARING FOR LH-SERIES JOISTS IS NOT PROVIDED, THE JOIST MANUFACTURER SHALL PROVIDE A SPECIAL SEAT DESIGN FOR ADEQUATE BEARING.
6. WHERE FIELD WELDING IS REQUIRED AT TOP OR BOTTOM CHORDS OF JOISTS AND JOIST GIRDERS, TEMPORARILY SHORE AT EACH SIDE OF WELDING LOCATION.
7. ALL JOIST AND JOIST GIRDERS SHALL RECEIVE A COAT OF RUST INHIBITIVE PRIMER.
8. THE STEEL JOIST FABRICATOR SHALL SUBMIT A CERTIFIED LETTER TO THE ARCHITECT WITH COPY TO THE STRUCTURAL ENGINEER OF RECORD STATING THAT HE HAS RECIEVED SPRINKLER DRAWINGS. THE STEEL JOIST FABRICATOR SHALL DESIGN THE JOIST FOR ADDITIONAL LOADING IMPOSED BY SPRINKLER MAIN SUPPLY LINES. THE STEEL JOIST FABRICATOR SHALL BE SOLELY RESPONSIBLE FOR THE ADEQUACY OF THE JOIST.

STEEL DECK

1. ROOF AND FLOOR DECKS SHALL BE AS NOTED ON THE DRAWINGS. PROPERTIES ARE AS FOLLOWS:

DECK SIZE AND GAUGE	I (in4)	S (in3)
1 1/2" X 22 GA DECK	.183	.209
1 1/2" X 20 GA DECK	.233	.271
1 1/2" X 18 GA DECK	.338	.395
1 1/2" X 16 GA DECK	.440	.502
2" X 22 GA DECK	.340	.283
2" X 20 GA DECK	.423	.361
2" X 18 GA DECK	.555	.510
2" X 16 GA DECK	.694	.639
3" X 22 GA DECK	.718	.418
3" X 20 GA DECK	.896	.534
3" X 18 GA DECK	1.203	.767
3" X 16 GA DECK	1.509	.960

2. DECK SHOP DRAWINGS SHALL BE SUBMITTED TO THE ENGINEER FOR APPROVAL PRIOR TO FABRICATION AND SHALL INDICATE HEADED STUD LAYOUT.
3. THE AMERICAN IRON AND STEEL INSTITUTE "SPECIFICATIONS FOR THE DESIGN OF LIGHT GAUGE STEEL STRUCTURAL MEMBERS" SHALL GOVERN THE DESIGN OF ALL DECK UNITS, STEEL DECK AND ALL OF ITS CLOSURES AND FLASHINGS SHALL CONFORM TO ASTM A653, GRADE 38, FY 38,000 PSI MIN.
4. ACCEPTABLE STEEL DECK MANUFACTURERS ARE AS FOLLOWS:

   VERCO MANUFACTURING, INC. (ICBO #2078, LARR #23243)
   H.H. ROBERTSON COMPANY (ICBO #2739, LARR #23597)
   ASC PACIFIC (ICBO # 2757, LARR #23783, 23784 AND 23803)
5. UNITS SHALL BE CONTINUOUS OVER THREE OR MORE SPANS, EXCEPT WHERE THE FRAMING DOES NOT PERMIT. SHORING MAY BE REQUIRED AT NON-CONTINUOUS SPANS. DECK SHOP DRAWINGS SHALL INDICATE WHERE SHORING WILL BE REQUIRED. DECK SHALL BEAR 2" MINIMUM AT ALL SUPPORTS.
6. ALL WELDING OF STEEL DECK SHALL BE DONE BY CERTIFIED LIGHT GAGE WELDERS IN ACCORDANCE WITH AWS "SPECIFICATIONS FOR WELDING SHEET STEEL IN STRUCTURES", AWS D1.3-(LATEST EDITION)
7. UNITS SHALL BE FASTENED TO THE STEEL SUPPORTS AT THE END OF THE UNITS AND AT INTERMEDIATE SUPPORTS AND TO THE STEEL SUPPORTS AT THE SIDE BOUNDARIES BY 3/4" DIAMETER PUDDLE WELDS AT 1'-0" O.C. SHEAR STUDS WELDED THROUGH DECK MAY BE USED IN PLACE OF 3/4" DIAMETER PUDDLE WELDS.
8. THE SIDE LAPS OF ADJACENT UNITS SHALL BE FASTENED BETWEEN SUPPORTS BY BUTTON PUNCHING AT 3'-0" O.C. MAX. UNO. CONTRACTOR MAY DECREASE SPACING OF SIDE LAP ATTACHMENTS TO ACCOMMODATE CONSTRUCTION LOADING AS REQUIRED.
9. PROVIDE FLASHING AND CLOSURE PLATES AT ENDS OF ALL UNITS, AROUND COLUMNS, AND AT ALL PERIMETER LOCATIONS REQUIRING CONCRETE.

MASONRY

1. CONCRETE BLOCK SHALL BE HOLLOW LOAD-BEARING CONCRETE MASONRY UNITS CONFORMING TO ASTM C-90, GRADE N. MEDIUM WEIGHT UNITS.
2. CEMENT SHALL BE AS SPECIFIED FOR CONCRETE.
3. REINFORCING BARS - SEE NOTES UNDER "REINFORCING STEEL" FOR REQUIREMENTS.
4. MORTAR SHALL BE TYPE S WITH PROPORTIONS (BY VOLUME) OF 4 -1/2 PARTS SAND, 1/2 PART HYDRATED LIME, 1 PART PORTLAND CEMENT AND SHALL COMPLY WITH UBC STD. 21-15. MORTAR SHALL HAVE A 28 DAY STRENGTH OF 1500 PSI MINIMUM. MORTAR COMPONENT TESTS ARE NOT REQUIRED.
5. GROUT SHALL CONSIST OF 3 PARTS SAND, 2 PARTS PEA GRAVEL, AND 1 PART PORTLAND CEMENT, AND SHALL COMPLY WITH UBC STD. 21-14. GROUT COMPONENT TESTS ARE NOT REQUIRED.
6. PROVIDE A MINIMUM OF 1/2" CLEAR BETWEEN MAIN REINFORCING AND MASONRY UNITS.
7. ALL CELLS SHALL BE GROUTED SOLID.
8. UNLESS NOTED, LAY MASONRY IN 1/2-UNIT RUNNING BOND. USE CLOSED-END UNITS AT CORNERS, OPENINGS AND END WALLS.
9. WHERE MASONRY STACK BOND CONSTRUCTION IS SPECIFIED, ALL UNITS SHALL BE OPEN-END UNITS AND SHALL BE GROUTED SOLID. USE CLOSED-END UNITS AT CORNERS, OPENINGS AND END WALLS.
10. DESIGN f'm = 1500 PSI FOR CMU CONSTRUCTION, AS PER TABLE 21 D, OF THE CODE. PRISM TESTING SHALL BE PERFORMED AS PER THE REQUIREMENTS OF THE CODE, SECTION 2105.3.2.

REINFORCING STEEL (FOR CONCRETE AND MASONRY)

1. REINFORCING BARS SHALL CONFORM TO THE REQUIREMENTS OF CHAPTER 19 OF THE CODE, ASTM A615, GRADE 60 UNO. DEFORMATIONS SHALL BE IN ACCORDANCE WITH ASTM A-305.
2. BARS SHALL BE CLEAN OF RUST, GREASE, OR OTHER MATERIALS LIKELY TO IMPAIR BOND. ALL REINFORCING BAR BENDS SHALL BE MADE COLD.
3. WELDED WIRE FABRIC SHALL CONFORM TO ASTM A-185. WWF SHALL BE SUPPORTED ON APPROVED CHAIRS.
4. REINFORCING BAR SPLICES SHALL BE MADE AS INDICATED ON THE DRAWINGS. LAP ALL HORIZONTAL BARS AT CORNERS AND INTERSECTIONS. STAGGER ALL SPLICES UNLESS NOTED OTHERWISE ON PLANS.
5. ALL BARS SHALL BE MARKED SO THEIR IDENTIFICATION CAN BE MADE WHEN THE FINAL IN-PLACE INSPECTION IS MADE.
6. WHERE WELDING OF REINFORCING IS APPROVED BY THE STRUCTURAL ENGINEER, IT SHALL BE DONE BY AWS CERTIFIED WELDERS USING E90XX OR APPROVED ELECTRODES. WELDING PROCEDURES SHALL CONFORM TO THE REQUIREMENTS OF STRUCTURAL WELDING CODE- REINFORCING STEEL", AWS-D1.4, LATEST REVISION. REINFORCING BARS TO BE WELDED SHALL CONFORM TO THE REQUIREMENTS OF ASTM A-706.
7. BARS IN SLABS SHALL BE SECURELY SUPPORTED ON WELL-CURED CONCRETE BLOCKS OR APPROVED METAL CHAIRS, PRIOR TO PLACING CONCRETE.
8. REINFORCING STEEL SHALL BE DETAILED IN ACCORDANCE WITH THE "A.C.I. MANUAL OF STANDARD PRACTICE FOR DETAILING REINFORCED CONCRETE STRUCTURES", LATEST EDITION.
9. COMPLETE AND DETAILED REINFORCING PLACEMENT DRAWINGS SHALL BE PREPARED AND SUBMITTED TO THE ARCHITECT FOR APPROVAL BY THE STRUCTURAL ENGINEER PRIOR TO FABRICATION IN ACCORDANCE WITH THE SPECIFICATIONS AND APPLICABLE CODES. THESE DRAWINGS SHALL BE AVAILABLE ON THE JOB SITE PRIOR TO PLACING OF CONCRETE.
10. MILL TEST REPORTS FOR GRADE 60 BARS SHALL BE SUBMITTED PRIOR TO PLACEMENT OF CONCRETE.
11. CONTINUOUS INSPECTION OF CONCRETE SHALL INCLUDE INSPECTION DURING INSTALLATION OF REINFORCING STEEL. INSPECTION SHALL BE SCHEDULED SO THAT PLACEMENT OF REINFORCING STEEL, CONDUIT, SLEEVES, AND EMBEDDED ITEMS MAY BE CORRECTED PRIOR TO PLACEMENT OF OVERLYING GRIDS OR REINFORCING STEEL.
12. ALL GRADE 60 REINFORCING STEEL SHALL BE CLEARLY MARKED TO DIFFERENTIATE THEM FROM GRADE 40 REINFORCING STEEL IF CONCURRENTLY ON SITE.
13. CONCRETE PROTECTION FOR REINFORCEMENT

    CAST-IN-PLACE CONCRETE (NON-PRESTRESSED). THE FOLLOWING MINIMUM CONCRETE COVER SHALL BE PROVIDED FOR REINFORCEMENT:

	MINIMUM COVER, IN.
A. CONCRETE CAST AGAINST AND PERMANENTLY EXPOSED TO EARTH	3
B. CONCRETE EXPOSED TO EARTH OR WEATHER:	
NO. 6 THROUGH NO. 18 BAR	2
NO 5 BAR, W31 OR D31 WIRE & SMALLER	1 1/2
C. CONCRETE NOT EXPOSED TO WEATHER OR IN CONTACT WITH GROUND:	
SLABS, WALLS, JOISTS:	
NO. 14 AND NO. 18 BAR	1 1/2
NO. 11 BAR & SMALLER	3/4
BEAMS, COLUMNS:	
PRIMARY REINFORCEMENT TIES, STIRRUPS, SPIRALS	1 1/2
D. CONCRETE TILT-UP PANELS CAST AGAINST A RIGID HORIZONTAL SURFACE, SUCH AS A CONCRETE SLAB, EXPOSED TO THE WEATHER	
NO. 8 & SMALLER	1
NO. 9 THROUGH 18	2

STRUCTURAL STEEL

1. STRUCTURAL STEEL SHALL BE DETAILED, FABRICATED AND ERECTED BY AN APPROVED AND LICENSED FABRICATOR IN ACCORDANCE WITH THE AISC SPECIFICATION FOR THE DESIGN, FABRICATION AND ERECTION OF STRUCTURAL STEEL FOR BUILDINGS (LATEST EDITION), AND WITH CHAPTER 22 OF THE CODE.
2. ALL STRUCTURAL STEEL SHALL CONFORM TO THE ASTM DESIGNATION AS INDICATED BELOW (UNO):

WF & WT SHAPES	A992
PIPE COLUMNS	A53, GRADE B
TUBE SECTIONS	A500, GRADE B
BOLTS	A325
BOLTS IN CONCRETE/MASONRY	A307
ANGLES, CHANNELS & PLATES	A36

3. THE STRUCTURAL STEEL FABRICATOR SHALL FURNISH SHOP DRAWINGS TO THE ARCHITECT OF ALL STEEL FOR ARCHITECTS AND STRUCTURAL ENGINEERS REVIEW AND APPROVAL BEFORE FABRICATION.
4. BOLT HOLES USED IN STEEL SHALL BE 1/16" LARGER IN DIAMETER THAN NOMINAL SIZE OF BOLT USED, EXCEPT AS NOTED.
5. ALL STRUCTURAL STEEL SURFACES THAT ARE ENCASED IN CONCRETE, OR MASONRY, SPRAY ON FIREPROOFING, OR ARE ENCASED BY BUILDING FINISH, SHALL BE LEFT UNPAINTED.
6. ALL WELDING IS TO BE DONE BY CERTIFIED WELDERS USING E70XX ELECTRODES (UNO). ALL WELDS SHALL BE IN CONFORMITY WITH THE PROJECT SPECIFICATIONS AND THE CODE FOR WELDING IN BUILDING CONSTRUCTION (AWS D1.1 LATEST REVISION) OF THE AMERICAN WELDING SOCIETY. SEE SPECIAL INSPECTIONS SECTION FOR WELDING INSPECTION REQUIREMENTS. USE OF E70T-4 WIRE IS NOT PERMITTED.
7. WELD LENGTHS CALLED FOR ON PLANS ARE THE NET EFFECTIVE LENGTH REQUIRED. WHERE FILLET WELD SYMBOL IS GIVEN WITHOUT INDICATION OF SIZE, USE MINIMUM SIZE WELDS AS SPECIFIED IN AISC MANUAL OF STEEL CONSTRUCTION 9TH EDITION, SECTION J2.2b
8. ALL EXPOSED STRUCTURAL STEEL AND MISCELLANEOUS METAL SHALL BE HOT DIP GALVANIZED AFTER FABRICATION UNO.

FOUNDATION

1. FOUNDATION DESIGN BASED ON SOILS REPORT BY NINYO & MOORE. REPORT DATED AUGUST 11, 2005.
2. FOOTINGS ARE DESIGNED BASED ON THE FOLLOWING INFORMATION:

   W= FOOTING WIDTH (FT)
   D= FOOTING DEPTH BELOW ADJACENT GRADE (FT)

   ALLOWABLE BEARING*

   WALL & ISOLATED FTGS = 3000+750 (W-1.5)+1500 (D-2), 4500 PSF MAX

   ISOLATED FTGS = 3000 PSF

   PASSIVE EARTH PRESSURE**

   = 400 PCF (EFP)

   COEFFICIENT OF FRICTION = 0.35

   *VALUES MAY BE INCREASED BY 1/3 FOR WIND OR SEISMIC LOAD CASES

   **PASSIVE PRESSURE AND FRICTION MAY BE COMBINED PROVIDED THE PASSIVE PRESSURE DOES NOT EXCEED TWO-THIRDS THE TOTAL PASSIVE RESISTANCE.

   FOOTINGS SHALL BEAR ON FIRM NATURAL SOILS. MINIMUM DEPTH OF FOOTINGS BELOW LOWEST ADJACENT FINAL GRADE SHALL BE 2'-0". MINIMUM WIDTH OF FOOTINGS SHALL BE 1'-6".
3. CONTRACTOR TO PROVIDE FOR DE-WATERING OF EXCAVATIONS FROM EITHER SURFACE WATER, GROUND WATER OR SEEPAGE, IF REQUIRED.
4. CONTRACTOR SHALL PROVIDE FOR DESIGN AND INSTALLATION OF ALL CRIBBING, SHEATHING AND SHORING REQUIRED AND SHALL BE SOLELY RESPONSIBLE FOR ALL EXCAVATION PROCEDURES INCLUDING LAGGING, SHORING AND PROTECTION OF ADJACENT PROPERTY, STRUCTURES, STREETS AND UTILITIES IN ACCORDANCE WITH ALL NATIONAL, STATE AND LOCAL SAFETY ORDINANCES.
5. EXCAVATION FOR FOOTINGS SHALL BE APPROVED BY THE INSPECTOR OR SOILS ENGINEER PRIOR TO PLACING THE CONCRETE AND REINFORCING. CONTRACTOR TO NOTIFY THE INSPECTOR WHEN INSPECTION OF EXCAVATION IS READY. INSPECTOR TO SUBMIT LETTER OF COMPLIANCE.
6. ALL EXCAVATIONS SHALL BE PROPERLY BACKFILLED. DO NOT PLACE BACKFILL BEHIND RETAINING WALLS BEFORE CONCRETE OR GROUT HAS ATTAINED FULL DESIGN STRENGTH. CONTRACTORS SHALL BRACE OR PROTECT ALL BUILDING AND PIT WALLS BELOW GRADE FROM LATERAL LOADS UNTIL ATTACHING FLOORS ARE COMPLETELY IN PLACE AND HAVE ATTAINED FULL STRENGTH. CONTRACTOR SHALL PROVIDE FOR DESIGN, PERMITS AND INSTALLATION OF SUCH BRACING.
7. FOUNDATIONS SHALL BE PLACED AND ESTIMATED ACCORDING TO DEPTHS SHOWN ON DRAWINGS. SHOULD SOIL ENCOUNTERED AT THESE DEPTHS NOT BE APPROVED BY THE INSPECTOR OR SOILS ENGINEER, FOUNDATION ELEVATIONS WILL BE ALTERED BY CHANGE ORDER.
8. FOOTING BACKFILL AND UTILITY TRENCH BACKFILL WITHIN BUILDING AREA SHALL BE MECHANICALLY COMPACTED IN LAYERS IN ACCORDANCE WITH THE SOILS REPORT AND APPROVED BY THE SOILS ENGINEER. FLOODING WILL NOT BE PERMITTED. ALL FILLS USED TO SUPPORT FOUNDATIONS SHALL BE INSPECTED BY THE SOILS ENGINEER REPRESENTATIVE PER CODE SECTION 3301, VOLUME I.
9. ALL ABANDONED FOOTINGS, UTILITIES, ETC. SHALL BE REMOVED UNLESS NOTED OTHERWISE. NEW FOOTINGS MUST EXTEND INTO UNDISTURBED SOILS.
10. SLABS-ON-GRADE SHALL BE SUPPORTED ON NATURAL GRADE OR COMPACTED FILL AS PER THE RECOMMENDATIONS OF THE SOILS REPORT.

CONCRETE

1. ALL CONCRETE CONSTRUCTION SHALL CONFORM WITH CHAPTER 19 OF THE CODE AND WITH THE PROVISIONS OF ACI 318, LATEST EDITION.
2. REINFORCED CONCRETE IS DESIGNED BY THE "ULTIMATE STRENGTH DESIGN METHOD".
3. CONCRETE MIXES SHALL BE DESIGNED BY THE APPROVED TESTING LABORATORY AND APPROVED BY THE STRUCTURAL ENGINEER. THE COMPRESSIVE STRENGTH OF THE CONCRETE SHALL BE PROPORTIONED BASED ON SECTION 1905 OF THE CODE.
4. SCHEDULE OF STRUCTURAL CONCRETE 28-DAY STRENGTH AND TYPES:

LOCATION IN STRUCTURE	STRENGTH (PSI)	DENSITY (PCF)	MAXIMUM WATER-CEMENT RATIO (BY WEIGHT)
ALL CONCRETE FOOTINGS	4000	150	0.50
CONCRETE SLAB-ON-GRADE	4000	150	0.45
CONCRETE FILL ON METAL DECK	4000	110	0.50
CONCRETE TILT-UP WALL PANELS, UNO	4000	150	0.50
EXTERIOR CONCRETE SLABS, STAIRS ON GRADE, CURBS AND OTHER NON-STRUCTURAL CONCRETE.	3000	150	0.50

5. PORTLAND CEMENT SHALL CONFORM TO ASTM C-150, TYPE V.
6. DO NOT USE FLYASH IN CONCRETE MIXES FOR CONCRETE SLAB-ON-GRADE AND CONCRETE TILT-UP WALL PANELS.
7. ADMIXTURES CONTAINING CHLORIDES SHALL NOT BE USED.
8. AGGREGATE FOR HARDROCK CONCRETE SHALL CONFORM TO ALL REQUIREMENTS AND TESTS OF ASTM C-33 AND PROJECT SPECIFICATIONS. EXCEPTIONS MAY BE USED ONLY WITH PERMISSION OF THE STRUCTURAL ENGINEER.
9. AGGREGATE FOR LIGHT WEIGHT (110PCF) CONCRETE SHALL BE EXPANDED SHALE CONFORMING TO ASTM A330 AND PROJECT SPECIFICATIONS. EXCEPTIONS MAY BE USED ONLY WITH PERMISSION OF THE STRUCTURAL ENGINEER.
10. CONCRETE MIXING OPERATION, ETC. SHALL CONFORM TO ASTM C-94.
11. PLACEMENT OF CONCRETE SHALL CONFORM TO CODE SECTION 1905 AND PROJECT SPECIFICATIONS. CLEAN AND ROUGHEN TO 1/4" AMPLITUDE ALL CONCRETE SURFACES AGAINST WHICH NEW CONCRETE IS TO BE PLACED.
12. ALL REINFORCING BARS, ANCHOR BOLTS AND OTHER CONCRETE INSERTS SHALL BE WELL SECURED IN POSITION PRIOR TO PLACING CONCRETE.
13. PROVIDE SLEEVES FOR PLUMBING AND ELECTRICAL OPENINGS IN CONCRETE BEFORE PLACING. DO NOT CUT ANY REINFORCING WHICH MAY CONFLICT. CORING IN CONCRETE IS NOT PERMITTED. NOTIFY THE STRUCTURAL ENGINEER IN ADVANCE OF CONDITIONS NOT SHOWN ON THE DRAWINGS. SEE THESE DRAWINGS FOR ADDITIONAL RESTRICTIONS ON THE PLACEMENT OF OPENINGS IN SLABS AND WALLS.
14. PIPES LARGER THAN 1-1/2" DIAMETER SHALL NOT BE EMBEDDED IN STRUCTURAL CONCRETE EXCEPT WHERE SPECIFICALLY APPROVED BY STRUCTURAL ENGINEER. PIPES SHALL NOT DISPLACE OR INTERRUPT REINFORCING BARS, SPACE EMBEDDED PIPES AND SLEEVES AT A MINIMUM OF 3 DIAMETERS ON CENTER.

CONSTRUCTION JOINTS

1. ALL CONSTRUCTION JOINTS SHALL BE CONSTRUCTED IN ACCORDANCE WITH CODE SECTION 1906.4 AND THE TYPICAL CONSTRUCTION JOINT DETAILS SHOWN ON THE STRUCTURAL DRAWINGS.
2. ALL SURFACES OF CONSTRUCTION JOINTS SHALL BE CLEANED TO REMOVE DUST, CHIPS, OR OTHER FOREIGN MATTER PRIOR TO PLACING THE ADJACENT CONCRETE.
3. CONSTRUCTION JOINTS IN FLOORS SHALL BE LOCATED WITHIN THE MIDDLE THIRD OF SLAB, BEAM & GIRDER SPANS. JOINTS IN GIRDERS SHALL BE OFFSET A MINIMUM OF TWO TIMES THE WIDTH OF THE INTERSECTING BEAM FROM THE FACE OF THE INTERSECTING BEAM.
4. THE CONTRACTOR SHALL SUBMIT THE PROPOSED LOCATIONS OF CONSTRUCTION JOINTS FOR APPROVAL BY THE STRUCTURAL ENGINEER BEFORE STARTING CONSTRUCTION.

GENERAL

1. THE CONTRACTOR SHALL VERIFY ALL DIMENSIONS PRIOR TO STARTING CONSTRUCTION. THE ARCHITECT SHALL BE NOTIFIED OF ANY DISCREPANCIES OR INCONSISTENCIES.
2. ALL DRAWINGS ARE CONSIDERED TO BE A PART OF THE CONTRACT DOCUMENTS. THE CONTRACTOR SHALL BE RESPONSIBLE FOR THE REVIEW AND COORDINATION OF ALL DRAWINGS AND SPECIFICATIONS PRIOR TO THE START OF CONSTRUCTION. ANY DISCREPANCIES THAT OCCUR SHALL BE BROUGHT TO THE ATTENTION OF THE ARCHITECT PRIOR TO START OF CONSTRUCTION SO THAT A CLARIFICATION CAN BE ISSUED. ANY WORK PERFORMED IN CONFLICT WITH THE CONTRACT DOCUMENTS OR ANY CODE REQUIREMENTS SHALL BE CORRECTED BY THE CONTRACTOR AT THEIR OWN EXPENSE AND AT NO EXPENSE TO THE OWNER OR ARCHITECT.
3. NOTES AND DETAILS ON DRAWINGS SHALL TAKE PRECEDENCE OVER GENERAL NOTES AND TYPICAL DETAILS. WHERE NO DETAILS ARE GIVEN, CONSTRUCTION SHALL BE AS SHOWN FOR SIMILAR WORK.
4. ALL WORK SHALL CONFORM TO THE MINIMUM STANDARDS OF THE FOLLOWING CODES:

   2001 CALIFORNIA BUILDING CODE (CBC) AND LATEST REVISIONS REFERRED TO HERE AS "THE CODE", AND ANY OTHER REGULATING AGENCIES WHICH HAVE AUTHORITY OVER ANY PORTION OF THE WORK, INCLUDING THE STATE OF CALIFORNIA DIVISION OF INDUSTRIAL SAFETY, AND THOSE CODES & STANDARDS LISTED IN THESE NOTES AND SPECIFICATIONS.
5. SEE ARCHITECTURAL DRAWINGS FOR THE FOLLOWING:

   SIZE AND LOCATION OF ALL DOOR AND WINDOW OPENINGS, EXCEPT AS NOTED.

   SIZE AND LOCATION OF ALL INTERIOR AND EXTERIOR NON-BEARING PARTITIONS.

   SIZE AND LOCATION OF ALL CONCRETE CURBS, EQUIPMENT PADS, PITS, FLOOR DRAINS, SLOPES, DEPRESSED AREAS, CHANGE IN LEVEL, CHAMFERS, GROOVES, INSERTS, ETC.

   SIZE AND LOCATION OF ALL FLOOR AND ROOF OPENINGS EXCEPT AS SHOWN.

   FLOOR AND ROOF FINISHES.

   DIMENSIONS NOT SHOWN ON STRUCTURAL DRAWINGS.
6. SEE MECHANICAL, PLUMBING AND ELECTRICAL DRAWINGS FOR THE FOLLOWING:

   PIPE RUNS, SLEEVES, HANGERS, TRENCHES, WALL AND SLAB OPENINGS, ETC., EXCEPT AS SHOWN OR NOTED.

   ELECTRICAL CONDUIT RUNS, BOXES, OUTLETS IN WALLS AND SLABS.

   CONCRETE INSERTS FOR ELECTRICAL, MECHANICAL OR PLUMBING FIXTURES.

   SIZE AND LOCATION OF MACHINE OR EQUIPMENT BASES, ANCHOR BOLTS FOR MOTOR MOUNTS.
7. THE CONTRACT STRUCTURAL DRAWINGS AND SPECIFICATIONS REPRESENT THE FINISHED STRUCTURE. THEY DO NOT INDICATE THE METHOD OF CONSTRUCTION. THE CONTRACTOR SHALL PROVIDE ALL MEASURES NECESSARY TO PROTECT THE STRUCTURE DURING CONSTRUCTION. SUCH MEASURES SHALL INCLUDE, BUT NOT BE LIMITED TO, BRACING, SHORING FOR LOADS DUE TO CONSTRUCTION EQUIPMENT, ETC. OBSERVATION VISITS TO THE SITE BY THE STRUCTURAL ENGINEER SHALL NOT INCLUDE INSPECTION OF THE ABOVE ITEMS.
8. OPENINGS, POCKETS, ETC., LARGER THAN 6" SHALL NOT BE PLACED IN CONCRETE SLABS, DECKS, WALLS, UNLESS SPECIALLY DETAILED ON THE STRUCTURAL DRAWINGS. NOTIFY THE STRUCTURAL ENGINEER WHEN DRAWINGS BY OTHERS SHOW OPENINGS, POCKETS, ETC., LARGER THAN 6" NOT SHOWN ON THE STRUCTURAL DRAWINGS, BUT WHICH ARE LOCATED IN STRUCTURAL MEMBERS. FOR ANY FURTHER RESTRICTIONS ON OPENINGS IN STRUCTURAL ELEMENTS, SEE APPLICABLE SECTIONS BELOW.
9. PIPES LARGER THAN 1-1/2" DIAMETER SHALL NOT BE EMBEDDED IN STRUCTURAL CONCRETE EXCEPT WHERE SPECIFICALLY APPROVED. NO CONDUITS SHALL BE PLACED IN CONCRETE FILL OVER METAL DECKING.
10. ASTM SPECIFICATIONS ON THE DRAWINGS SHALL BE OF THE LATEST REVISION.
11. CONTRACTOR SHALL INVESTIGATE SITE DURING CLEARING AND EARTHWORK OPERATIONS FOR FILLED EXCAVATIONS OR BURIED STRUCTURES, SUCH AS CESSPOOLS, CISTERNS, FOUNDATIONS, ETC. IF ANY SUCH STRUCTURES ARE FOUND, STRUCTURAL ENGINEER SHALL BE NOTIFIED IMMEDIATELY.
12. CONSTRUCTION MATERIAL SHALL BE SPREAD OUT IF PLACED ON FRAMED ROOF OR FLOOR. LOAD SHALL NOT EXCEED THE DESIGN LIVE LOAD PER SQUARE FOOT. PROVIDE ADEQUATE SHORING AND/OR BRACING WHERE STRUCTURE HAS NOT ATTAINED DESIGN STRENGTH.
13. DESIGN LOADS:

    LIVE LOADS:

ROOF	20 PSF REDUCED
SECOND FLOOR	100 PSF
STORAGE	125 PSF UNREDUCIBLE

14. WIND ANALYSIS PER CHAPTER 16 DIVISION III OF THE CODE

    I_w= 1.15 (ESSENTIAL FACILITY)
    q_s= 16.4 PSF (80 MPH)
    EXPOSURE= C
15. SEISMIC ANALYSIS PER CHAPTER 16 DIVISION IV OF THE CODE UTILIZING THE STATIC FORCE PROCEDURE.

    Z = 0.4 (ZONE 4)
    I = 1.25 (ESSENTIAL FACILITY)
    ρ = 1.0
    N_a = 1.0
    N_v = 1.3
    R= 4.5
    C_v = 0.72
    C_a = 0.42
    Ω_o = 2.8
    SOIL TYPE S_c

SHEET INDEX

S0.1 GENERAL NOTES
S0.2 GENERAL NOTES, ABBREVIATIONS & SYMBOLS

S2.1 FOUNDATION PLAN
S2.2 SECOND FLOOR & LOW ROOF FRAMING PLAN
S2.3 ROOF FRAMING PLAN

S3.1 PRECAST TILT-UP PANEL ELEVATIONS

S4.1 TYPICAL CONCRETE DETAILS
S4.2 TYPICAL CONCRETE & MASONRY DETAILS

S5.1 TYPICAL STEEL DETAILS
S5.2 TYPICAL STEEL DETAILS
S5.3 TYPICAL STEEL DETAILS
S5.4 TYPICAL STEEL DETAILS
S5.5 STEEL & MISCELLANEOUS DETAILS
S5.6 STEEL BRACED FRAME ELEVATION & DETAILS

S6.1 TYPICAL PRECAST TILT-UP PANEL DETAILS
S6.2 TYPICAL PRECAST TILT-UP PANEL DETAILS

S7.1 TYPICAL METAL STUD DETAILS

S8.1 STAIR FRAMING PLANS
S8.2 STAIR DETAILS
S8.3 STAIR DETAILS

APPROVED
MAY 01 2006
BUILDING & SAFETY
CITY OF FONTANA

APPROVED
REVIEWED BY ______ DATE

Approval of these plans shall not be construed to be a permit to, or an approval of any violation of any of the provisions of the state or local laws. One set of approved plans must be kept on the job until completion.
WILLDAN

LANGDON WILSON
ARCHITECTURE PLANNING INTERIORS

18800 VON KARMAN AVENUE, SUITE 200
IRVINE, CALIFORNIA 92612-1517
949 - 833 - 9193

STRUCTURAL
KPFF 949 - 252 - 1022
MECHANICAL
TKSC 949 - 756 - 0565
ELECTRICAL
CLP 714 - 751 - 1851
LANDSCAPE
FRANK RADMACHER 714 - 832 - 1774
CIVIL ENGINEER
IKE CONSULTING 714 - 241 - 0606
AUDIO / VISUAL
VENEKLASEN ASSOCIATES 310 - 450 - 1733
DATA TELEPHONE
PLANNET CONSULTING 714 - 982 - 5800

CITY OF FONTANA
DEVELOPMENT SERVICES
ORGANIZATION BUILDING
8353 SIERRA AVENUE FONTANA, CALIFORNIA

CITY OF FONTANA CALIFORNIA

REV.	DATE	ISSUED FOR	REV.	DATE	ISSUED FOR
	12-5-05	PLAN CHECK			
	02-06-06	PC RESUBMIT.			
	03-10-06	2ND PC RESUBMIT.			
	04-17-06	PERMIT SET			
	04-17-06	BID SET			

Stamp
REGISTERED PROFESSIONAL ENGINEER ROBERT JAMES FECHOTA S306 Exp. 12/31/07 STRUCTURAL STATE OF CALIFORNIA

DATE: 03/27/06 SCALE: AS NOTED
DRAWN BY: FS
JOB NO. L454-000 CADD TITLE: S0.1
SHEET TITLE:
GENERAL NOTES
SHEET NUMBER:
S0.1

©Copyright 2005 Langdon Wilson

PERMIT SET / BID SET 04-17-06

JOB #	JOB NAME	FILE PATH & NAME	PLOTTED DATE & TIME	UPDATED BY	PLOT SCALE	PROG.MG.	DRAFTER
14-0312	FONTANA	I:\PROJECTS\2004\14-0312\S0.1.DWG	MAR. 22, 2006 3:16:16 PM	---	1=1	RF	TT

XREFS: 140312TB,

ABBREVIATIONS

Abbreviation	Meaning
A	AREA (IN^2)
AB	ANCHOR BOLT
ABV	ABOVE
ADDL	ADDITIONAL
ADJ	ADJACENT
AFF	ABOVE FINISH FLOOR
AGGR	AGGREGATE
ALT	ALTERNATE
ALUM	ALUMINUM
ANCH	ANCHOR
APPVD	APPROVED
APPROX	APPROXIMATELY
ARCH	ARCHITECTURAL; ARCHITECT
ARND	AROUND
&	AND
L	ANGLE
@	AT
BEL	BELOW
BD	BOARD
BF	BRACE FRAME
BLDG	BUILDING
BLK	BLOCK
BLKG	BLOCKING
BM	BEAM
BN	BOUNDARY NAIL
BNDRY	BOUNDARY
BOT OR B	BOTTOM
BOF	BOTTOM OF FOOTING
BRCG	BRACING
BRG	BEARING
BSMT	BASEMENT
BT	BENT
BTW	BETWEEN
BYND	BEYOND
C	AMERICAN STANDARD CHANNEL
CAM	CAMBER
CALCS	CALCULATIONS
CANT	CANTILEVER
CBC	CALIFORNIA BUILDING CODE
CC	CENTER TO CENTER
CCR	CALIFORNIA CODE OF REGULATIONS
CG	CENTER OF GRAVITY
CIP	CAST IN PLACE
CJ	CONSTRUCTION JOINT; CONTROL JOINT
℄	CENTER LINE
CLR	CLEARANCE; CLEAR
CMU	CONCRETE MASONRY UNIT
CO	COMPANY
COL	COLUMN
COMP	COMPRESSION
CONC	CONCRETE
CONN	CONNECTION; CONNECT
CONST	CONSTRUCTION
CONT	CONTINUE; CONTINUOUS
CONTR	CONTRACTOR
CP	COMPLETE PENETRATION
CTR	CENTER
CTSK	COUNTERSINK; COUNTERSUNK
CF	CUBIC FOOT
d	PENNY (NAIL OR d_b)
DBL	DOUBLE
DBLR	DOUBLER
DEPT	DEPARTMENT
DET	DETAIL
DF	DOUGLAS FIR
DIA OR ⌀	DIAMETER
DIAG	DIAGONAL
DIAPH	DIAPHRAGM
DIM	DIMENSION
DIR	DIRECTION
DIST	DISTANCE
DL	DEAD LOAD
DN	DOWN
DSA	DIVISION OF THE STATE ARCHITECT
DO	DITTO
DWG	DRAWING
DWL	DOWEL
(E)	EXISTING
EA	EACH
EF	EACH FACE
e.g.	FOR EXAMPLE
EJ	EXPANSION JOINT
EL	ELEVATION
ELEC	ELECTRICAL
ELEV	ELEVATOR
EMB	EMBEDDED
EN	EDGE NAIL
ENGR	ENGINEER
EOS	EDGE OF SLAB
EQ	EQUAL
EQUIP	EQUIPMENT
EQUIV	EQUIVALENT
ES	EACH SIDE
ETC	ET CETERA
EW	EACH WAY
EXIST	EXISTING
EXT	EXTERIOR
Fb	ALLOWABLE BENDING STRESS
FB	FLAT BAR
FD	FLOOR DRAIN
FDN	FOUNDATION
FF	FINISH FLOOR
FIN	FINISH
FLR	FLOOR
FLG	FLANGE
FN	FIELD NAIL
F'm	MASONRY COMPRESSIVE STRENGTH
FOS	FACE OF STUD
FOW	FACE OF WALL
FP	FIREPROOF; FULL PENETRATION
FRMG	FRAMING
FS	FULL SIZE; FAR SIDE
FT	FOOT; FEET
FTG	FOOTING
Fy	YIELD STRENGTH
GA	GAUGE
GB	GRADE BEAM
GC	GENERAL CONTRACTOR
GALV	GALVANIZED
GAR	GARAGE
GEN	GENERAL
GLB	GLUED LAMINATED BEAM
GND	GROUND
GR	GRADE
HD	HOLD DOWN
HDR	HEADER
HGR	HANGER
HK	HOOK
HORIZ OR H	HORIZONTAL
HOSP	HOSPITAL
HP	HP SHAPE, HEAVY PILING
HR	HARD ROCK
HS	HIGH STRENGTH
HT	HEIGHT
I	MOMENT OF INERTIA
ID	INSIDE DIAMETER
i.e.	THAT IS
IF	INSIDE FACE
IN	INCH
INCL	INCLUDE, INCLUDING
INFO	INFORMATION
INSP	INSPECTION, INSPECTOR
INT	INTERIOR
INTERM	INTERMEDIATE
INV	INVERT
JST	JOIST
JT	JOINT
KIP OR K	1,000 POUNDS
KO	KNOCK-OUT
KP	KING POST
KSF	KIPS PER SQUARE FOOT
KSI	KIPS PER SQUARE INCH
LAB	LABORATORY
LBS OR #	POUND
LDGR	LEDGER
LF	LINEAL FOOT
LG	LONG
LH	LOW HYDROGEN
LIN	LINEAL; LINEAR
LL	LIVE LOAD
LLBB	LONG LEGS BACK-TO-BACK
LLH	LONG LEG HORIZONTAL
LLV	LONG LEG VERTICAL
LOCS	LOCATIONS
LONGIT	LONGITUDINAL
LP	LOW POINT
LSH	LONG SLOTTED HOLES
LTWT	LIGHTWEIGHT
LVL	LEVEL
M	MISC SHAPE
MAS	MASONRY
MAT	MATERIAL
MAX	MAXIMUM
MB	MACHINE BOLT
MC	MISCELLANEOUS CHANNEL
MECH	MECHANICAL
MEZZ	MEZZANINE
MF	MOMENT FRAME
MFR	MANUFACTURER
MID	MIDDLE
MIN	MINIMUM
MISC	MISCELLANEOUS
MJ	MASONRY JOINT
MK	MARK
MTL	METAL
MULT	MULTIPLE
(N)	NEW
N	NORTH
NAT	NATURAL
NF	NEAR FACE
NIC	NOT IN CONTRACT
NLG	NAILING
NO. OR #	NUMBER
NS	NEAR SIDE
NTS	NOT TO SCALE
OC	ON CENTER
OD	OUTSIDE DIAMETER
OF	OUTSIDE FACE
OH	OPPOSITE HAND
OPNG	OPENING
OPP	OPPOSITE
OPNG	OPENING
OSB	ORIENTED STRAND BOARD
PARA OR //	PARALLEL
PC	PRECAST
PC	PIPE COLUMN
PCF	POUNDS PER CUBIC FOOT
PCI	POUNDS PER CUBIC INCH
PDF	POWER DRIVEN FASTENER
PLF	POUNDS PER LINEAL FOOT
PE	POLYETHYLENE, PROFESSIONAL ENGINEER
PERP OR ⊥	PERPENDICULAR
PI	PLYWOOD INDEX
ℙ	PLATE
PL	PROPERTY LINE
PLY	PLYWOOD
PLCS	PLACES
PLBG	PLUMBING
PNL	PANEL
PP	PARTIAL PENETRATION
PREFAB	PREFABRICATED
PRKG	PARKING
PROJ	PROJECT
PROP	PROPERTY
PSF	POUNDS PER SQUARE FOOT
PSI	POUNDS PER SQUARE INCH
PUN	PUNCHED
PTFE	POLYTETRAFLUORETHYLENE (TEFLON)
PVC	POLYVINYL CHLORIDE
PVMT	PAVEMENT
#	POUND; NUMBER
RAD	RADIUS
RAFT	RAFTER
RD	ROOF DRAIN
REF	REFERENCE
REG	REGULAR
REINF	REINFORCE; REINFORCING
REQ	REQUIRED
RET	RETAINING
REV	REVISION
RF	ROOF
RM	ROOM
RO	ROUGH OPENING
S	AMERICAN STANDARD SHAPE
SCHED	SCHEDULE
SECT	SECTION
SEL	SELECT
SEP	SEPARATION
SHT	SHEET
SHTG	SHEATHING
SIM	SIMILAR
SJ	SEISMIC JOINT
SLBB	SHORT LEGS BACK-TO-BACK
SMRF	SPECIAL MOMENT RESISTANT FRAME
SPA	SPACES
SPCG	SPACING
SPCL	SPECIAL
SPCS	SPACES
SPECS	SPECIFICATIONS
SQ	SQUARE
SS	SELECT STRUCTURAL
SSH	SHORT SLOTTED HOLES
ST	STRUCTURAL TEE CUT FROM S SHAPE
STAGG	STAGGER
STD	STANDARD
STIFF	STIFFENER
STIRR	STIRRUP
STL	STEEL
STRUC	STRUCTURAL
SW	SHEAR WALL
SYM	SYMMETRICAL
T	TOP
TOR	TOP OF RISER
TB	TIE BEAM
T&B	TOP & BOTTOM
T&G	TONGUE & GROOVE
T/	TOP OF
TOC	TOP OF CURB
TEMP	TEMPERATURE, TEMPORARY
THK	THICK
THRU	THROUGH
TOSL	TOP OF SLAB
TN	TOE NAIL
TL	TOTAL LOAD
TOB	TOP OF BEAM
TOL	TOP OF LEDGER
TOS	TOP OF STEEL
TOSH	TOP OF SHEARWALL
TOW	TOP OF WALL
TRANSV	TRANSVERSE
TS	STRUCTURAL TUBING
TSG	TAPERED STEEL GIRDER
TYP	TYPICAL
UL	UNDERWRITERS' LABORATORY, INC.
UBC	UNIFORM BUILDING CODE
UNO	UNLESS NOTED OTHERWISE
UT	ULTRA-SONIC TEST
VERT or V	VERTICAL
W OR WF	WIDE FLANGE
W/	WITH
W/O	WITHOUT
WD	WOOD
WP	WORK POINT
WP	WATERPROOF
WT	STRUCTURAL TEE CUT FROM W SHAPE
WWF	WELDED WIRE FABRIC
WHT	WEIGHT

STRUCTURAL STEEL SHAPES

W	W SHAPES
S	S SHAPES
M	M SHAPES
HP	HP SHAPES
C	STD CHANNEL
MC	MISC CHANNEL
L	ANGLES
WT, ST, MT	STRUCT TEES
PIPE	STANDARD
PIPE-X	EXTRA STRONG
PIPE-XX	DBL EXTRA STRONG
TS	STRUCT TUBING

INSTITUTIONS

AWS	AMERICAN WELDING SOCIETY
ACI	AMERICAN CONCRETE INSTITUTE
AISC	AMERICAN INSTITUTE OF STEEL CONSTRUCTION
AITC	AMERICAN INSTITUTE OF TIMBER CONSTRUCTION
APA	AMERICAN PLYWOOD ASSOCIATION
ASTM	AMERICAN SOCIETY FOR TESTING AND MATERIALS
AISI	AMERICAN IRON AND STEEL INSTITUTE
PCI	PRE-CAST CONCRETE INSTITUTE
PTI	POST-TENSION CONCRETE INSTITUTE
CRSI	CONCRETE REINFORCING STEEL INSTITUTE
SJI	STEEL JOIST INSTITUTE
	AMERICAN SOCIETY FOR TESTING AND MATERIALS
ANSI	AMERICAN NATIONAL STANDARDS INSTITUTE
ASTM	
AWS	AMERICAN WELDING SOCIETY
AWPB	AMERICAN WOOD PRESERVERS BUREAU
ICBO	INTERNATIONAL CONFERENCE OF BUILDING OFFICIALS

SYMBOLS

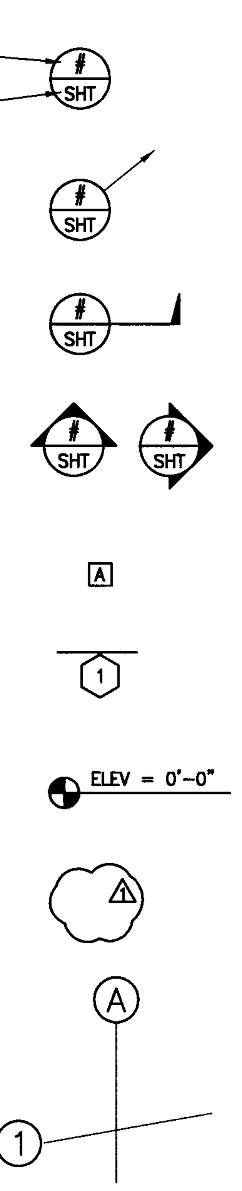

DETAIL NUMBER

SHEET NUMBER

DETAIL REFEERENCE

SECTION REFERENCE

WALL ELEVATION

FOOTING PAD MARK

SHEARWALL MARK

DATUM ELEVATION

REVISION & CLOUD

GRID SYSTEM

METAL STUDS

1. ALL LIGHTGAGE METAL FRAMING SHALL BE AS NOTED BELOW:
   EXTERIOR STUDS: GALVANIZED
   INTERIOR STUDS: GALVANIZED OR FINISHED WITH MANUFACTURER'S STANDARD RUST INHIBITIVE PAINT.
2. ALL LIGHTGAGE METAL FRAMING CONSTRUCTION SHALL BE IN ACCORDANCE WITH AISI "SPECIFICATIONS FOR DESIGN OF COLD FORMED STEEL STRUCTURAL MEMBERS."
3. ALL LIGHTGAGE METAL FRAMING SHALL CONFORM WITH THE FOLLOWING:
   GALVANIZED AND PAINTED STUDS, TRACKS, END CLOSURES, BRIDGING AND ACCESSORIES 12, 14 OR 16 GAUGE — Fy = 50,000 psi
   GALVANIZED AND PAINTED STUDS, TRACKS, END CLOSURES, BRIDGING AND ACCESSORIES 18 OR 20 GAUGE — Fy = 33,000 psi
4. UNLESS NOTED OTHERWISE, ALL INTERIOR AND EXTERIOR METAL STUD WALLS SHALL HAVE CEMCO "SLP-TRK" SLOTTED TRACK (ICBO ER-5344) OR SLIP TRACK WITH 1/2" OF ALLOWABLE DEFLECTION. TOP TRACK OF SLIP TRACKS SHALL HAVE 1-1/2" FLANGES. CEMCO "SLIP-TRK" SHALL HAVE SAME GAUGE AS STUDS.
5. UNLESS NOTED OTHERWISE, ALL INTERIOR PARTITIONS THAT DO NOT SUPPORT CASEWORK OR SHELVING SHALL BE 4", 6" x 20 GA (33 MILS) OR 8" x 18 GA (43 MILS) STUDS AND BOTTOM TRACKS AND 16 GA (54 MILS) TOP TRACK OF SLIP TRACKS. TRACKS SHALL HAVE 1-1/4" FLANGES. SEE ARCHITECTURAL DRAWINGS FOR STUD SIZES AT EACH WALL.
6. UNLESS NOTED OTHERWISE, ALL INTERIOR PARTITIONS SUPPORTING FRAMING CASEWORK OR SHELVING SHALL BE 6" OR 8" x 16GA (54 MILS) STUDS AND BOTTOM TRACKS AND 14 GA (68 MILS) TOP TRACK OF SLIP TRACKS. TRACKS SHALL HAVE 1-1/4" FLANGES. SEE ARCHITECTURAL DRAWINGS FOR STUD SIZES AT EACH WALL.
7. UNLESS NOTED OTHERWISE, ALL EXTERIOR PARTITIONS, SOFFIT FRAMING AND FURRING SHALL BE 4", 6" OR 8"x 16 GA (54 MILS) STUDS, JOISTS AND BOTTOM TRACKS AND 14 GA (68 MILS) TOP TRACK OF SLIP TRACKS. TRACKS SHALL HAVE 1-1/2" FLANGES. SEE ARCHITECTURAL DRAWINGS FOR STUD SIZES AT EACH WALL.
8. MINIMUM STUD PROPERTIES SHALL BE AS FOLLOWS:

SECTION	GROSS AREA A=......IN^2	MAJOR AXIS I_{EFF}=......IN^4	MAJOR AXIS S_{EFF}=......IN^3
3-5/8" FRAMING:			
362S137-33	0.236	0.479	0.254
362S137-43	0.306	0.616	0.334
362S137-54	0.379	0.756	0.400
362S137-68	0.470	0.922	0.508
362S162-33	0.262	0.551	0.292
362S162-43	0.340	0.710	0.389
362S162-54	0.422	0.873	0.468
362S162-68	0.524	1.069	0.584
362S200-33	0.297	0.643	0.318
362S200-43	0.385	0.836	0.448
362S200-54	0.479	1.030	0.509
362S200-68	0.595	1.265	0.673
362T125-33	0.212	0.384	0.174
362T125-43	0.276	0.531	0.245
362T125-54	0.346	0.678	0.312
362T125-68	0.436	0.907	0.427
362T150-33	0.229	0.414	0.180
362T150-43	0.298	0.574	0.255
362T150-54	0.374	0.735	0.325
362T150-68	0.471	0.993	0.449
362T200-33	0.264	0.464	0.190
362T200-43	0.343	0.649	0.270
362T200-54	0.431	0.832	0.345
362T200-68	0.543	1.138	0.480
4" FRAMING:			
400S137-33	0.249	0.603	0.290
400S137-43	0.323	0.776	0.382
400S137-54	0.401	0.953	0.457
400S137-68	0.497	1.165	0.581
400S162-33	0.275	0.692	0.332
400S162-43	0.357	0.892	0.443
400S162-54	0.443	1.098	0.533
400S162-68	0.550	1.346	0.666
400S200-33	0.310	0.812	0.362
400S200-43	0.402	1.047	0.509
400S200-54	0.500	1.292	0.580
400S200-68	0.622	1.589	0.766
400T125-33	0.225	0.484	0.201
400T125-43	0.293	0.666	0.282
400T125-54	0.367	0.849	0.359
400T125-68	0.462	1.134	0.488
400T150-33	0.242	0.519	0.208
400T150-43	0.315	0.719	0.293
400T150-54	0.396	0.918	0.374
400T150-68	0.498	1.237	0.513
400T200-33	0.277	0.581	0.220
400T200-43	0.360	0.811	0.311
400T200-54	0.452	1.037	0.397
400T200-68	0.569	1.412	0.549
6" FRAMING:			
600S137-33	0.318	1.582	0.510
600S137-43	0.413	2.042	0.670
600S137-54	0.514	2.518	0.809
600S137-68	0.640	3.094	1.029
600S137-97	0.889	4.188	1.396
600S162-33	0.344	1.793	0.577
600S162-43	0.447	2.316	0.767
600S162-54	0.556	2.860	0.927
600S162-68	0.693	3.525	1.164
600S162-97	0.966	4.797	1.599
600S200-33	0.379	2.059	0.617
600S200-43	0.492	2.683	0.873
600S200-54	0.613	3.319	1.002
600S200-68	0.764	4.101	1.317
600S200-97	1.067	5.612	1.871
600S250-43	0.537	3.082	0.918
600S250-54	0.670	3.760	1.069
600S250-68	0.836	4.727	1.342
600S250-97	1.169	6.496	2.063
600T125-33	0.294	1.297	0.335
600T125-43	0.383	1.750	0.515
600T125-54	0.480	2.221	0.653
600T125-68	0.605	2.930	0.874
600T150-33	0.311	1.385	0.335
600T150-43	0.405	1.868	0.534
600T150-54	0.509	2.374	0.678
600T150-68	0.641	3.154	0.913
600T200-33	0.346	1.542	0.333
600T200-43	0.451	2.076	0.565
600T200-54	0.565	2.641	0.717
600T200-68	0.712	3.540	0.973

THESE VALUES ARE TAKEN FROM THE SSMA CATALOG ICBO ER-4943P.

9. ALL SHEET METAL SCREWS SHALL PROTRUDE 1/4" (NOT LESS THAN 3 EXPOSED THREADS) THROUGH METAL FRAMING WITH MINIMUM STEEL PROPERTIES BASED ON SSMA CATALOG ICBO ER-4943P. SCREWS SHOULD BE INSTALLED AND TIGHTENED IN ACCORDANCE WITH SCREW MANUFACTURER'S RECOMMENDATIONS.
10. ALL METAL STUDS SHALL HAVE STIFFENED FLANGES. SEE DRAWINGS FOR DETAILS ON CONNECTIONS, BRACING, BRIDGING, ETC. (SEE MANUFACTURERS SPECIFICATIONS AND RECOMMENDATIONS.)

WOOD

1. ALL STRUCTURAL LUMBER SHALL BE DOUGLAS FIR, VISUALLY GRADED OR MACHINE GRADED UNDER THE STANDARD GRADING RULES, NO. 17 OF THE WEST COAST LUMBER INSPECTION BUREAU. ALL FRAMING MEMBERS SHALL BE AS FOLLOWS:

3" NOMINAL AND SMALLER BEAMS AND JOISTS	GRADE NO. 2 UNO
4 x OR LARGER BEAMS AND JOISTS	GRADE NO. 2 UNO
4 x 4 AND LARGER POSTS	GRADE NO. 2 UNO
WALL STUDS	GRADE NO. 2 UNO

2. ALL STRUCTURAL PLYWOOD SHEATHING SHALL BE DOUGLAS FIR STANDARD GRADE STRUCTURAL I WITH EXTERIOR GLUE CONFORMING TO THE LATEST EDITION OF PS 1 UNO. ALL STRUCTURAL COMPOSITE SHEATHING SHALL BE DOUGLAS FIR STANDARD GRADE STRUCTURAL I WITH EXTERIOR GLUE CONFORMING TO THE LATEST EDITION OF PS 2 UNO. ALL PANELS SHALL BEAR LEGIBLE DFPA STAMPS.
3. ALL FLOOR AND ROOF SHEATHING SHALL BE LAID FACE GRAIN PERPENDICULAR TO FRAMING UNO. ALL SHEATHING SHALL BE APPROVED BY THE BUILDING INSPECTOR BEFORE COVERING.
4. UNLESS NOTED OTHERWISE, ALL WOOD SILL PLATE UNDER BEARING, EXTERIOR, OR SHEAR WALLS IN CONTACT WITH CONCRETE OR MASONRY SHALL BE BOLTED TO CONCRETE OR MASONRY WITH 5/8" ⌀ ANCHOR RODS W/ 7" MIN CONCRETE/MASONRY EMBED AT 6'-0" OC BEGINNING AT 12" MAX FROM EACH END OF THE PLATES.
5. ALL BOLT HEADS AND NUTS WHICH BEAR AGAINST THE FACE OF WOOD MEMBERS SHALL BE PROVIDED WITH 2"x2"x3/16" STEEL PLATE WASHERS UNO.
6. ALL NAILS FOR CONNECTING WOOD MEMBERS SHALL BE COMMON NAILS. MINIMUM NAILING REQUIREMENTS OUTLINED IN TABLE 23-II-B-1 SHALL BE FOLLOWED UNLESS NOTED OTHERWISE.
7. RETIGHTEN BOLTS BEFORE CLOSING-IN.
8. USE OF MACHINE NAILING IS SUBJECT TO A SATISFACTORY JOBSITE DEMONSTRATION FOR EACH PROJECT AND THE APPROVAL BY THE ARCHITECT OR STRUCTURAL ENGINEER AND THE BUILDING DEPARTMENT. THE APPROVAL IS SUBJECT TO CONTINUED SATISFACTORY PERFORMANCE. MACHINE NAILING WILL NOT BE APPROVED IN 5/16" SHEATHING. IF NAILHEADS PENETRATE THE OUTER PLY MORE THAN WOULD BE NORMAL FOR A HAND HAMMER OR IF MINIMUM ALLOWABLE EDGE DISTANCES ARE NOT MAINTAINED, THE PERFORMANCE WILL BE DEEMED UNSATISFACTORY.
9. ALL WOOD HARDWARE CONNECTORS SHALL BE SIMPSON STRONG-TIE.
10. PROVIDE FULL DEPTH BLOCKING AT 4'-0" OC BETWEEN ADJACENT JOISTS UNDER ALL PERPENDICULAR PARTITIONS. PROVIDE DOUBLE JOIST UNDER ALL PARALLEL PARTITIONS UNLESS NOTED OTHERWISE.
11. STRUCTURAL MEMBERS SHALL NOT BE CUT FOR PIPES, CONDUIT, ETC. UNLESS SPECIFICALLY NOTED OR DETAILED FOR SUCH ALTERATIONS.
12. ROOF SHEATHING SHALL BE INSPECTED PRIOR TO PLACING INSULATION AND ROOFING.
13. SOLID BLOCKING (2x MIN) SHALL BE PLACED BETWEEN JOISTS OR RAFTERS AT ALL SUPPORTS.
14. ALL ANCHOR RODS SHALL CONFORM TO ASTM F1554. ALL BOLTS SHALL CONFORM TO ASTM A307.
15. HOLES FOR BOLTS SHALL BE BORED 1/32" TO 1/16" LARGER THAN NOMINAL BOLT DIAMETER. (THIS INCLUDES HOLES FOR ANCHOR RODS IN SILL PLATE).
16. JOIST CONNECTIONS SHALL BE SIMPSON 'LUS' UNLESS NOTED OTHERWISE.
17. ALL POST CONNECTIONS LOCATED DIRECTLY ON CONCRETE SHALL BE SIMPSON 'CB' UNLESS NOTED OTHERWISE.

EXPANSION TYPE CONCRETE WEDGE ANCHOR DESIGN AND TEST VALUES
HILTI-KWIK BOLT 3 CARBON STEEL (ICC ESR-1385)
3000 PSI LIGHT WEIGHT CONCRETE

ANCHOR DIA (INCHES)	EMBEDMENT DEPTH (INCHES)	DESIGN VALUES (POUNDS)		TENSION TEST (POUNDS)
		SHEAR	TENSION	
1/4	1 1/8 2	400	142 187	284 376
3/8	1 5/8 2 1/2	755 1,100	250 400	500 800
1/2	2 1/4 3 1/2	1,370 1,840	445 650	890 1,300
5/8	2 3/4 4	2,480 3,125	670 718	1,340 1,436
3/4	3 1/4 4 3/4	3,170 4,135	935 1,363	1,870 2,726

NOTES

1. ANCHOR DIAMETER REFERS TO THE THREAD SIZE OF THE WEDGE ANCHOR.
2. APPLY PROOF TEST LOADS TO WEDGE ANCHORS WITHOUT REMOVING THE NUT IF POSSIBLE. IF NOT, REMOVE NUT AND INSTALL A THREADED COUPLER TO THE SAME TIGHTNESS OF THE ORIGINAL NUT USING A TORQUE WRENCH AND APPLY LOAD.
3. REACTION LOADS FROM TEST FIXTURES MAY BE APPLIED CLOSE TO THE ANCHOR BEING TESTED, PROVIDED THE ANCHOR IS NOT RESTRAINED FROM WITHDRAWING BY THE FIXTURE(S).
4. TEST EQUIPMENT IS TO BE CALIBRATED BY AN APPROVED TESTING LABORATORY IN ACCORDANCE WITH STANDARD RECOGNIZED PROCEDURES.
5. THE FOLLOWING CRITERIA APPLY FOR THE ACCEPTANCE OF INSTALLED ANCHORS:
   HYDRAULIC RAM METHOD: THE ANCHOR SHOULD HAVE NO OBSERVABLE MOVEMENT AT THE APPLICABLE TEST LOAD. FOR WEDGE AND SLEEVE TYPE ANCHORS, A PRACTICAL WAY TO DETERMINE OBSERVABLE MOVEMENT IS THAT THE WASHER UNDER THE NUT BECOMES LOOSE.
6. TESTING SHOULD OCCUR 24 HOURS MINIMUM AFTER INSTALLATION OF THE SUBJECT ANCHORS.
7. THE TABULATED VALUES ARE FOR ANCHORS INSTALLED A MINIMUM OF 12 ANCHOR DIAMETERS ON CENTER AND A MINIMUM EDGE DISTANCE OF 10 ANCHOR DIAMETERS.
8. THE TABULATED VALUES FOR LIGHT WEIGHT CONCRETE ARE FOR ANCHORS INSTALLED IN LIGHTWEIGHT EXPANDED SHALE AGGREGATE CONCRETE HAVING THE COMPRESSIVE STRENGTH AT THE TIME OF INSTALLATION. CONCRETE AGGREGATE MUST COMPLY WITH U.B.C. STANDARD NO. 19-3.
9. WHEN INSTALLING DRILLED-IN ANCHORS AND/OR POWDER DRIVEN PINS IN POST-TENSIONED OR REINFORCED SLABS, CARE SHALL BE TAKEN TO AVOID THE REINFORCING STEEL AND TENDONS. MAINTAIN 2" CLEARANCE FROM ANCHORS TO EXISTING REINFORCING BARS AND TENDONS. USE NON-DESTRUCTIVE TESTING TO DETERMINE LOCATION OF REINFORCING AND TENDONS WHERE LOCATION OF THOSE ITEMS ARE NOT CERTAIN.

APPROVED
MAY 0 1 2006
BUILDING & SAFETY
CITY OF FONTANA

REVIEWED
Approved of these plans ... construed to be ... approval of any violation ... the provisions of the ... laws. One set of approved ... be kept on the job until completion.
WILLDAN

LANGDON
WILSON
ARCHITECTURE
PLANNING
INTERIORS

18800 VON KARMAN AVENUE, SUITE 200
IRVINE, CALIFORNIA 92612-1517
949 - 833 - 9193

STRUCTURAL
KPFF 949 - 252 - 1022
MECHANICAL
TKSC 949 - 756 - 0565
ELECTRICAL
GLP 714 - 751 - 1851
LANDSCAPE
FRANK RADMACHER 714 - 832 - 1774
CIVIL ENGINEER
IKE CONSULTING 714 - 241 - 0606
AUDIO / VISUAL
VENEKLASEN ASSOCIATES 310 - 450 - 1733
DATA TELEPHONE
PLANNET CONSULTING 714 - 982 - 5800

CITY OF FONTANA
DEVELOPMENT SERVICES
ORGANIZATION BUILDING
8353 SIERRA AVENUE FONTANA, CALIFORNIA

REV.	DATE	ISSUED FOR	REV.	DATE	ISSUED FOR
	12-5-05	PLAN CHECK			
	02-06-06	PC RESUBMIT.			
	03-10-06	2ND PC RESUBMIT.			
	04-17-06	PERMIT SET			
	04-17-06	BID SET			

Stamp
REGISTERED PROFESSIONAL ENGINEER ROBERT JAMES FECAROTTA No. ...06 Exp. 3/31/07 STRUCTURAL STATE OF CALIFORNIA

DATE:	03/27/06	SCALE:	AS NOTED
DRAWN BY:	FS		
JOB NO.	L454-000	CADD TITLE:	S0.2

SHEET TITLE:
GENERAL NOTES, ABBREVIATIONS & SYMBOLS

SHEET NUMBER:
S0.2

©Copyright 2005 Langdon Wilson

PERMIT SET / BID SET 04-17-06

JOB #	JOB NAME	FILE PATH & NAME	PLOTTED DATE & TIME	UPDATED BY	PLOT SCALE	PROJ.MG.	DRAFTER
14-0312	FONTANA	I:\PROJECTS\2004\14-0312\S0.2.DWG	FEB. 03, 2006 11:20:10 AM	---	1=1	RF	TT

XREFS: 140312TB,

COLUMN SCHEDULE	
MARK	COLUMN SIZE
C1	HSS6x6x3/16
C2	HSS6x6x1/4
C3	HSS6x6x3/8
C4	HSS8x8x5/16
C5	HSS12x6x1/2
C6	HSS4x4x1/4

FOOTING SCHEDULE			
MARK	SIZE		REINFORCING
	W x L	DEPTH	
F1	3'-0" x 3'-0"	1'-6"	(6) #4 EW
F2	4'-0" x 4'-0"	2'-0"	(5) #6 EW
F3	5'-0" x 5'-0"	2'-0"	(7) #6 EW
F4	6'-0" x 6'-0"	2'-6"	(9) #6 EW
F5	6'-6" x 6'-6"	2'-6"	(11) #6 EW
F6	SEE PLAN	2'-0"	(7) #6 LONG DIR (14) #6 SHORT DIR
F7	SEE PLAN	2'-0"	(5) #6 LONG DIR (8) #6 SHORT DIR
F8	2'-0" x 2'-0"	1'-6"	(3) #4 EW

PLAN NOTES

1. FOR GENERAL NOTES SEE SHEET S0.1.
2. FOR ABBREVIATIONS AND SYMBOLS SEE SHEET S0.2.
3. FOR TYPICAL CONCRETE DETAILS SEE SHEETS S4.1 & S4.2.
4. FOR TYPICAL PRECAST DETAILS SEE SHEETS S6.1 & S6.2.
5. FOR TYPICAL METAL STUD DETAILS SEE SHEET S7.1.
6. REFER TO ARCHITECTURAL DRAWINGS FOR SLAB ELEVATIONS, DEPRESSIONS, SLOPES, OPENINGS, CURBS, DRAINS, TRENCHES, SLAB EDGE LOCATIONS, HOUSEKEEPING PADS, PITS, SWALES, EXTERIOR SLABS ETC. AND FOR WALL OVERALL DIMENSIONS, LOCATION OF OPENINGS ETC. NOT INDICATED ON STRUCTURAL DRAWINGS.
7. CONTRACTOR TO VERIFY ALL DIMENSIONS AND ELEVATIONS PRIOR TO START OF WORK.
8. SLAB-ON-GRADE SHALL BE: 5" THICK W/ #4 @ 24" OC EACH WAY AT MID-DEPTH OF SLAB OVER PROPERLY COMPACTED FILL PER SOILS REPORT.
9. FINISH FLOOR ELEVATION IS = 0'-0" CORRESPONDING TO DATUM ELEVATION +00'-0", UNO. ALL ELEVATIONS ARE REFERENCED TO 0'-0". TOP OF SLAB ABOVE FINISH FLOOR ELEVATION IS NOTED THUS: TOSL=0'-0"
10. TOP OF WALL & PAD FOOTING ELEVATION BELOW FINISH FLOOR IS -2'-0" UNLESS NOTED OTHERWISE.
11. CENTER ALL COLUMNS ON GRID LINES UNLESS NOTED OTHERWISE.
12. ANY DAMAGE TO THE PAD DUE TO VEHICULAR TRAFFIC SHALL BE REPAIRED/REPLACED AT THE EXPENSE OF THE CONTRACTOR.
13. F1 — INDICATES PAD FOOTING PER SCHEDULE ON THIS SHEET & 4/S4.1.
14. C1 — INDICATES STEEL COLUMN PER SCHEDULE ON THIS SHEET. SEE 7/S5.3 FOR BASE PLATE & ANCHOR RODS.
15. INDICATES STEPPED FOOTING PER DETAIL 14/S4.1.
16. INDICATES STEP IN SLAB-ON-GRADE PER 5/S4.1.
17. P-12 — INDICATES TILT-UP CONC PANEL ELEVATION MARK SEE PANEL ELEVATIONS ON SHEETS S3.1.
18. THE GEOTECHNICAL ENGINEER SHALL OBSERVE THE FOUNDATION EXCAVATIONS BEFORE PLACEMENT OF FORMS OR REINFORCEMENT. A LETTER OF OBSERVATION SHALL BE GIVEN TO THE BUILDING OFFICIAL BEFORE REQUESTING FOUNDATION INSPECTION.

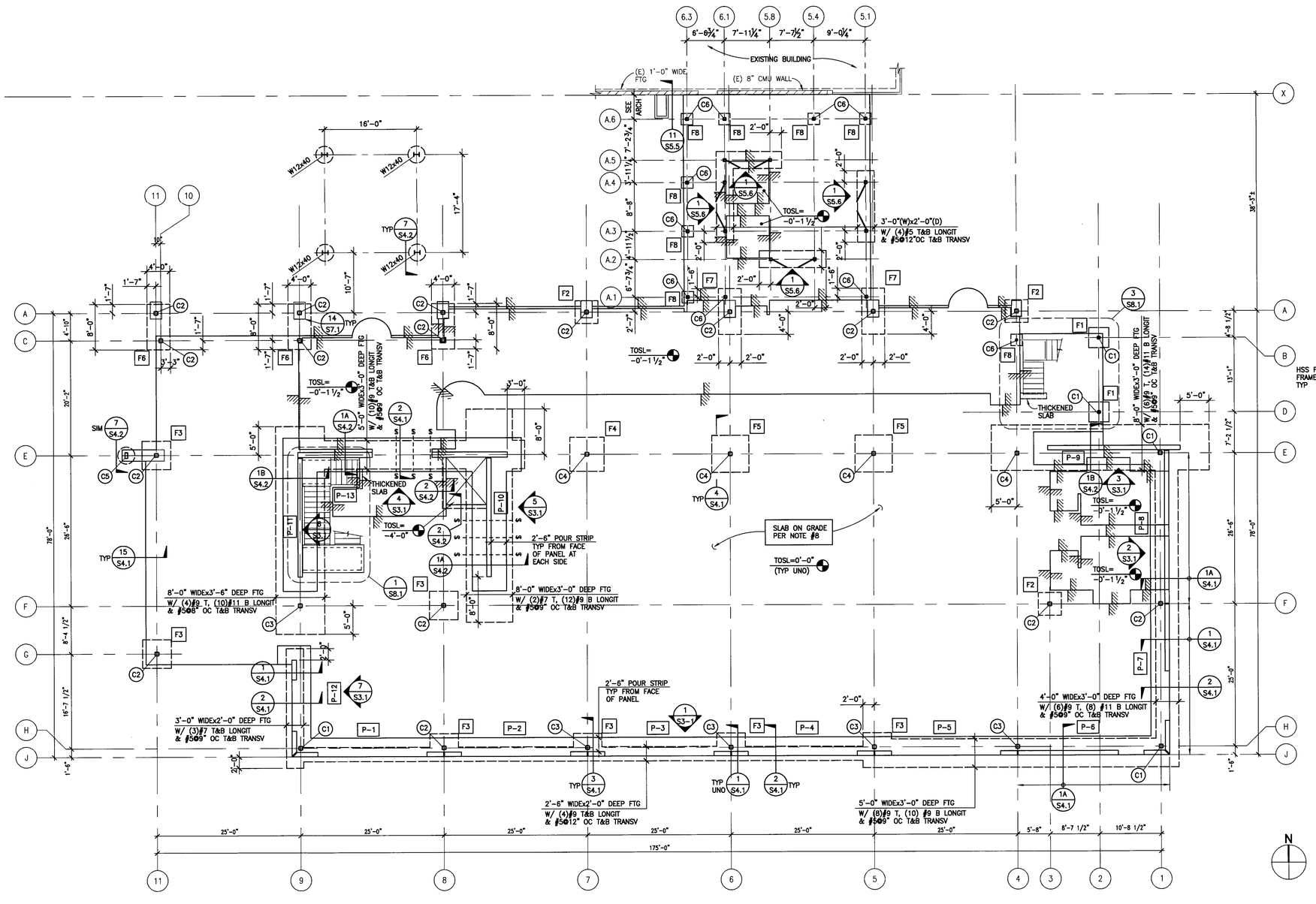

FOUNDATION PLAN 1
1/8" = 1'-0"

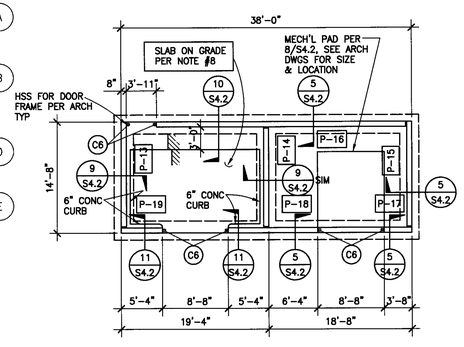

A TRASH ENCLOSURE FOUNDATION PLAN

NOTES:
1. SEE ARCH DRAWINGS FOR LOCATION.
2. SEE B/S3.1 FOR PANEL ELEVATIONS.

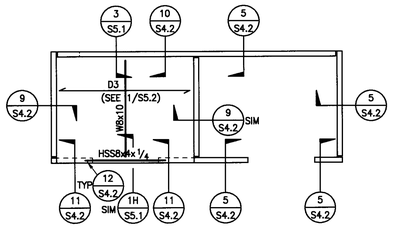

B TRASH ENCLOSURE ROOF FRAMING

APPROVED
MAY 01 2006
BUILDING & SAFETY
CITY OF FONTANA

REVIEWED BY ____ DATE ____

Approved of these plans shall not be construed to be a permit for, or an approval of any violation of any of the provisions of the state or local laws. One set of approved plans shall be kept on the job site at all times during the progress of the work.

LANGDON WILSON
ARCHITECTURE
PLANNING
INTERIORS

18800 VON KARMAN AVENUE, SUITE 200
IRVINE, CALIFORNIA 92612-1517
949 · 833 · 9193

STRUCTURAL
KPFF 949 · 252 · 1022
MECHANICAL
TKSC 949 · 756 · 0565
ELECTRICAL
GLP 714 · 751 · 1851
LANDSCAPE
FRANK RADMACHER 714 · 832 · 1774
CIVIL ENGINEER
IKE CONSULTING 714 · 241 · 0606
AUDIO / VISUAL
VENEKLASEN ASSOCIATES 310 · 450 · 1733
DATA TELEPHONE
PLANNET CONSULTING 714 · 982 · 5800

CITY OF FONTANA
DEVELOPMENT SERVICES
ORGANIZATION BUILDING
8353 SIERRA AVENUE FONTANA, CALIFORNIA

REV.	DATE	ISSUED FOR	REV.	DATE	ISSUED FOR
	12-5-05	PLAN CHECK			
	02-06-06	PC RESUBMIT.			
	03-10-06	2ND PC RESUBMIT.			
	04-17-06	PERMIT SET			
	04-17-06	BID SET			

Stamp

REGISTERED PROFESSIONAL ENGINEER JAMES FOX No. 35351 EXP. 12/31/07 STRUCTURAL STATE OF CALIFORNIA

DATE: 03/27/06 SCALE: AS NOTED
DRAWN BY: FS
JOB NO. L454-000 CADD TITLE: S2.1

SHEET TITLE:
FOUNDATION PLAN

SHEET NUMBER:
S2.1

©Copyright 2005 Langdon Wilson

PERMIT SET / BID SET 04-17-06

JOB #	JOB NAME	FILE PATH & NAME	PLOT DATE & TIME	PLOT SCALE	PROJ. MGR.	DRAWN BY
14-0312	FONTANA	L:\PROJECTS\2004\14-0312\S2-1.DWG	MAR. 15, 2006 8:11:15 PM	1=1	RF	TT

XREFS: XLADRD, x-ref notes, 140312TB,

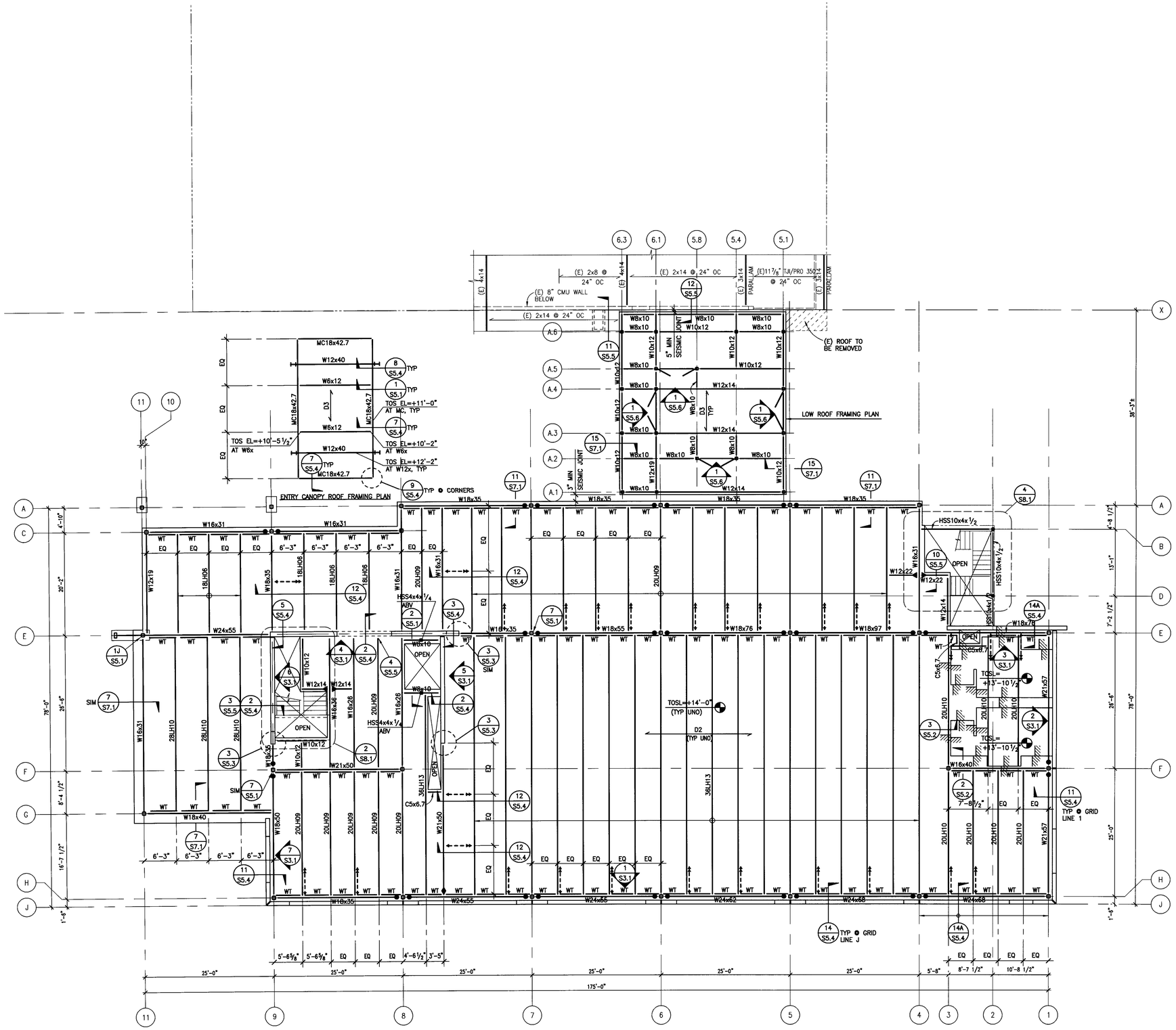

SECOND FLOOR & LOW ROOF FRAMING PLAN 1

1/8" = 1'-0"

PLAN NOTES

1. FOR GENERAL NOTES SEE SHEET S0.1.
2. FOR ABBREVIATIONS AND SYMBOLS SEE SHEET S0.2.
3. FOR COLUMN SCHEDULE SEE SHEET S2.1.
4. FOR TYPICAL CONCRETE DETAILS SEE SHEET S4.1 & S4.2.
5. FOR TYPICAL STEEL DETAILS SEE SHEET S5.1 THRU S5.3.
6. REFER TO ARCHITECTURAL DRAWINGS FOR ROOF SLOPES, PARAPETS, OPENINGS, DRAINS, CRICKETS, CANTS, ETC. AND FOR ROOF DRAINAGE, LOCATIONS OF OPENINGS, ETC. NOT INDICATED ON STRUCTURAL DRAWINGS.
7. CONTRACTOR TO VERIFY ALL DIMENSIONS AND ELEVATIONS PRIOR TO START OF WORK.
8. INDICATES DEPRESSION IN STRUCTURAL SLAB. REFER TO DETAILS 2/S5.2, 3/S5.2 & 4/S5.2 UNO ON PLAN.
9. INDICATES MOMENT CONNECTION PER 16/S5.3 UNO.
10. INDICATES BOTTOM FLANGE BRACE PER DETAIL 6/S5.1.
11. INDICATES BOTTOM FLANGE BRACE AT STEEL JOISTS PER DETAIL 1/S5.4 UNO.
12. INDICATES FULL HEIGHT STIFFENER PLATE PER DETAIL 1C/S5.1.
13. INDICATES DRAG CONNECTION PER DETAIL 5/S5.2 UNO.
14. <x> INDICATES AMOUNT OF UPWARD CAMBER, IN INCHES, AT BEAM MIDSPAN.
15. [x] INDICATES NUMBER OF HEADED STUDS PER DETAIL 13/S5.2.
16. D1 INDICATES DIRECTION AND TYPE OF DECKING PER DETAIL 1/S5.2.
17. TOSL= +X'-X" INDICATES TOP OF STRUCTURAL SLAB ELEVATION.
18. TOS EL= +X'-X" INDICATES TOP OF STEEL ELEVATION FROM FINISH FLOOR DATUM OF +0'-0".
19. WT INDICATES WT ABOVE TOP FLANGE OF W BEAM PER 13/S5.4.
20. NOTES TO JOIST MANUFACTURER:
    A. ALL 'LH' JOISTS SHALL BE DESIGNED FOR AN ADDITIONAL 500 LBS POINT LOAD AT ANY ONE PANEL POINT UNO.
    B. '36LH' JOISTS SHALL BE DESIGNED FOR AN ADDITIONAL LOAD CASE OF 5.6K AXIAL LOAD WITH 220 PLF VERTICAL DEAD LOAD.
    C. '20LH' JOISTS SHALL BE DESIGNED FOR AN ADDITIONAL LOAD CASE OF 6.2K AXIAL LOAD WITH 242 PLF VERTICAL DEAD LOAD.
21. FOR JOIST OR JOIST GIRDER WITH LOAD NOT AT PANEL POINT, SEE DETAIL 10/S5.4.

LANGDON WILSON
ARCHITECTURE
PLANNING
INTERIORS

18800 VON KARMAN AVENUE, SUITE 200
IRVINE, CALIFORNIA 92612-1517
949 · 833 · 9193

STRUCTURAL
KPFF 949 · 252 · 1022
MECHANICAL
TKSC 949 · 756 · 0565
ELECTRICAL
CLP 714 · 751 · 1851
LANDSCAPE
FRANK RADMACHER 714 · 832 · 1774
CIVIL ENGINEER
IKE CONSULTING 714 · 241 · 0606
AUDIO / VISUAL
VENEKLASEN ASSOCIATES 310 · 450 · 1733
DATA TELEPHONE
PLANNET CONSULTING 714 · 982 · 5800

CITY OF FONTANA

DEVELOPMENT SERVICES
ORGANIZATION BUILDING

8353 SIERRA AVENUE FONTANA, CALIFORNIA

REV.	DATE	ISSUED FOR	REV.	DATE	ISSUED FOR
	12-5-05	PLAN CHECK			
	02-06-06	PC RESUBMIT.			
	03-10-06	2ND PC RESUBMIT.			
	04-17-06	PERMIT SET			
	04-17-06	BID SET			

Stamp

APPROVED
MAY 01 2006
BUILDING & SAFETY
CITY OF FONTANA

REVIEWED BY

Approved of construed to ... approval of any ... the provisions of ... laws. One set of ... be kept on the job site ...
WILL DAVIS

DATE: 03/27/06 SCALE: AS NOTED
DRAWN BY: FS
JOB NO. L454-000 CADD TITLE: S2.2

SHEET TITLE:
SECOND FLOOR & LOW ROOF FRAMING PLAN

SHEET NUMBER:
S2.2

©Copyright 2005 Langdon Wilson

PERMIT SET / BID SET 04-17-06

JOB # 14-0312
FONTANA
XREFS: x-framing notes, 140312TB, FURN-2, XLAGRID,
FILE PATH & NAME: E:\PROJECTS\2004\14-0312\S2-2.DWG
PLOTTED DATE & TIME: MAR. 09, 2006 3:22:56 PM
PLOTTED BY: TOM SALAC
PRINT SCALE: 1=1
RF
PRINT NO.
TT

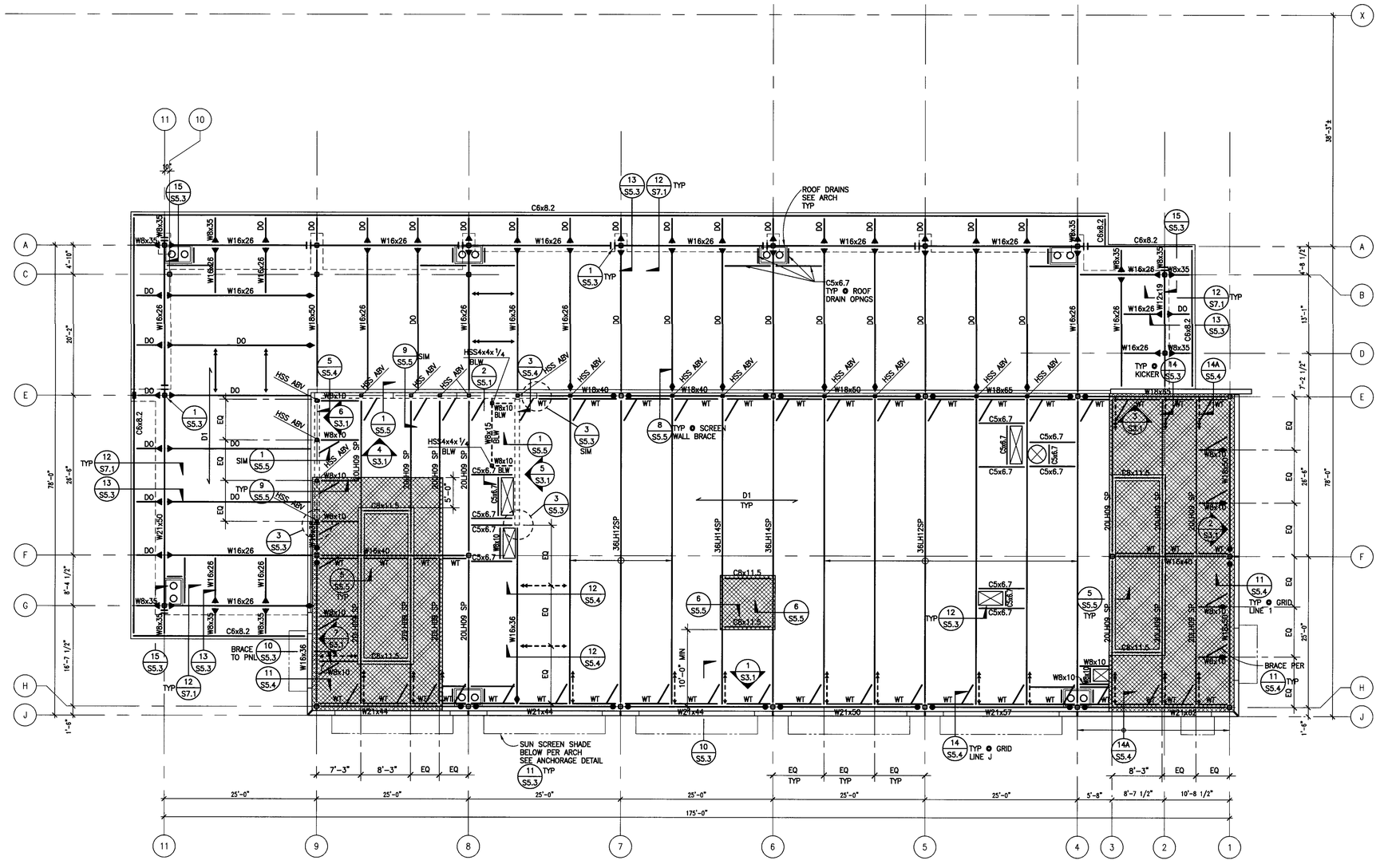

ROOF FRAMING PLAN 1

1/8" = 1'-0"

PLAN NOTES

1. FOR GENERAL NOTES SEE SHEET S0.1.
2. FOR ABBREVIATIONS AND SYMBOLS SEE SHEET S0.2.
3. FOR COLUMN SCHEDULE SEE SHEET S2.1.
4. FOR TYPICAL CONCRETE DETAILS SEE SHEET S4.1 & S4.2.
5. FOR TYPICAL STEEL DETAILS SEE SHEET S5.1 THRU S5.3.
6. REFER TO ARCHITECTURAL DRAWINGS FOR ROOF SLOPES, PARAPETS, OPENINGS, DRAINS, CRICKETS, CANTS, ETC. AND FOR ROOF DRAINAGE, LOCATIONS OF OPENINGS, ETC. NOT INDICATED ON STRUCTURAL DRAWINGS.
7. CONTRACTOR TO VERIFY ALL DIMENSIONS AND ELEVATIONS PRIOR TO START OF WORK.
8. INDICATES STEP IN STRUCTURAL SLAB.
9. INDICATES MOMENT CONNECTION PER 16/S5.3 UNO.
10. INDICATES BOTTOM FLANGE BRACE PER DETAIL 6/S5.1.
11. INDICATES BOTTOM FLANGE BRACE AT STEEL JOISTS PER DETAIL 1/S5.4 UNO.
12. INDICATES FULL HEIGHT STIFFENER PLATE PER DETAIL 1C/S5.1.
13. INDICATES DRAG CONNECTION PER DETAIL 5/S5.2 UNO.
14. <x> INDICATES AMOUNT OF UPWARD CAMBER, IN INCHES, AT BEAM MIDSPAN.
15. [x] INDICATES NUMBER OF HEADED STUDS PER DETAIL 13/S5.2.
16. D1 INDICATES DIRECTION AND TYPE OF DECKING PER DETAIL 1/S5.2.
17. TOSL= +X'-X" INDICATES TOP OF STRUCTURAL SLAB ELEVATION.
18. TOS EL= +X'-X" INDICATES TOP OF STEEL ELEVATION FROM FINISH FLOOR DATUM OF +0'-0".
19. WT INDICATES WT ABOVE TOP FLANGE OF W BEAM PER 13/S5.4.
20. NOTES TO JOIST MANUFACTURER:
    A. ALL 'LH' JOISTS TO BE DESIGNED FOR AN ADDITIONAL 500 LBS POINT LOAD AT ANY ONE PANEL POINT UNO.
    B. '20LH' JOISTS SHALL BE DESIGNED FOR AN ADDITIONAL LOAD CASE OF 5.8K AXIAL SEISMIC LOAD WITH 840 PLF VERTICAL DEAD LOAD.
    C. '36LH' JOISTS SHALL BE DESIGNED FOR AN ADDITIONAL LOAD CASE OF 6.5K AXIAL SEISMIC LOAD WITH 333 PLF VERTICAL DEAD LOAD.
    D. JOISTS MARKED 'SP' SHALL BE DESIGNED FOR AN ADDITIONAL SEISMIC POINT LOAD OF 3.3K VERTICAL & AXIAL AT CONCRETE PARAPET BRACES AND AN ADDITIONAL WIND POINT LOAD OF 1.35K VERTICAL & AXIAL AT METAL STUD SCREEN WALL.
21. FOR JOIST OR JOIST GIRDER WITH LOAD NOT AT PANEL POINT, SEE DETAIL 10/S5.4.
22. INDICATES ROOF TOP CONC PAD FOR AC UNITS PER 7/S5.2. VERIFY CURB SET OUT DIMENSION AND LOCATION W/ MECH CONTRACTOR FOR MECH UNIT PRIOR TO CONSTRUCTION.
23. INDICATES AC UNIT CURB PER 5/S5.5.

LANGDON WILSON
ARCHITECTURE
PLANNING
INTERIORS

18800 VON KARMAN AVENUE, SUITE 200
IRVINE, CALIFORNIA 92612-1517
949 · 833 · 9193

STRUCTURAL
KPFF 949 · 252 · 1022
MECHANICAL
TKSC 949 · 756 · 0565
ELECTRICAL
CLP 714 · 751 · 1851
LANDSCAPE
FRANK RADMACHER 714 · 832 · 1774
CIVIL ENGINEER
IKE CONSULTING 714 · 241 · 0606
AUDIO / VISUAL
VENEKLASEN ASSOCIATES 310 · 450 · 1733
DATA TELEPHONE
PLANNET CONSULTING 714 · 982 · 5800

CITY OF FONTANA
DEVELOPMENT SERVICES ORGANIZATION BUILDING

8353 SIERRA AVENUE FONTANA, CALIFORNIA

REV.	DATE	ISSUED FOR	REV.	DATE	ISSUED FOR
	12-5-05	PLAN CHECK			
	02-06-06	PC RESUBMIT.			
	03-10-06	2ND PC RESUBMIT.			
	04-17-06	PERMIT SET			
	04-17-06	BID SET			

Stamp

REGISTERED PROFESSIONAL ENGINEER JAMES F. KOSTE No. S3012 Exp. 12/31/07 STRUCTURAL STATE OF CALIFORNIA

APPROVED
MAY 01 2006
BUILDING & SAFETY
CITY OF FONTANA

DATE: 03/27/06 SCALE: AS NOTED
DRAWN BY: FS
JOB NO. L454-000 CADD TITLE: S2.3

SHEET TITLE:
ROOF FRAMING PLAN

SHEET NUMBER:
S2.3

©Copyright 2005 Langdon Wilson

PERMIT SET / BID SET 04-17-06

JOB # 14-0372 | JOB NAME: FONTANA | XREFS: x-roof framing notes, 14037ZTB, XLAGRD.
FILE PATH & NAME: L:\PROJECTS\DOHA\14-0372\S2-3.DWG | PLOTTED DATE & TIME: MAR. 20, 2006 2:49:06 PM | UPDATED BY: LOT SCALE: 1=1 | PROG. NO.: --- | DRAWN: RF | CHK'D: TT

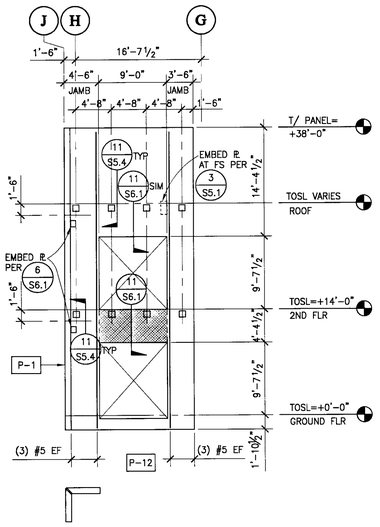

INTERIOR WALL ELEVATION AT PANEL P-12

1/8"=1'-0" | 7

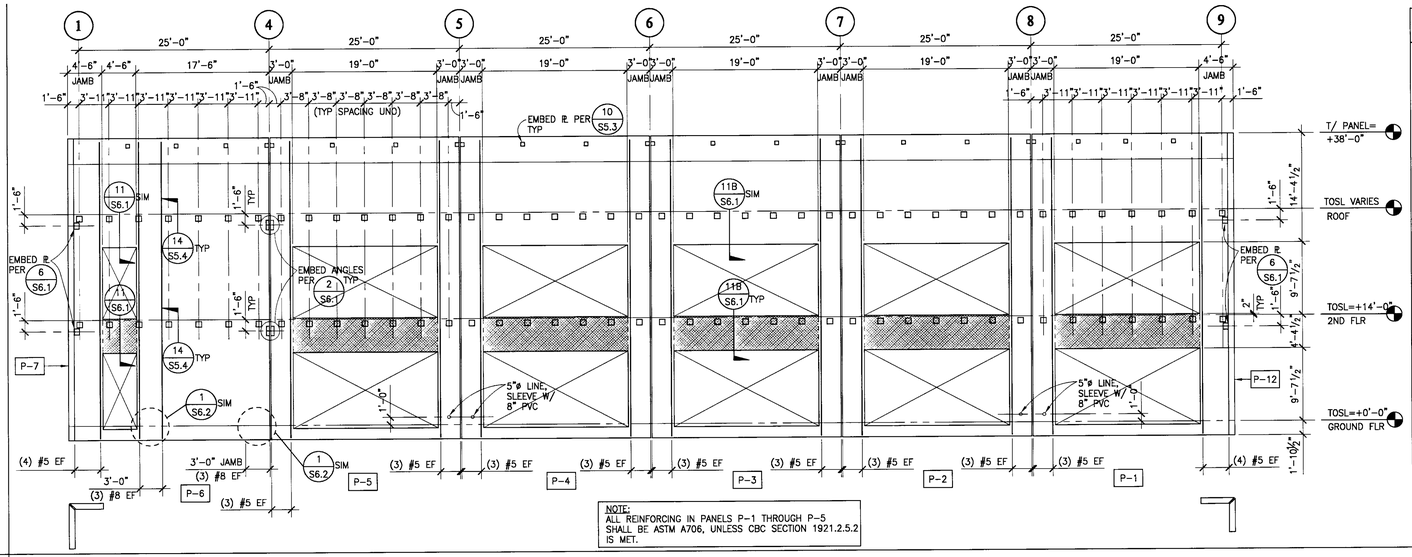

NOTE:
ALL REINFORCING IN PANELS P-1 THROUGH P-5 SHALL BE ASTM A706, UNLESS CBC SECTION 1921.2.5.2 IS MET.

WALL ELEVATION AT PANEL P-1 THROUGH P-6

1/8"=1'-0" | 1

PANEL ELEVATION NOTES

1. FOR GENERAL NOTES SEE SHEET S0.1.
2. FOR ABBREVIATIONS AND SYMBOLS SEE SHEET S0.2.
3. REINFORCING SHOWN IS IN ADDITION TO TYPICAL. FOR TYPICAL TILT-UP PANEL REINFORCING SCHEDULE AND TYPICAL PANEL REINFORCING DETAILS SEE SHEET S6.1.
4. P-1 INDICATES PANEL MARK/NUMBER.
5. HORIZ DIMENSIONS ARE GIVEN TO THE CENTERLINE OF PANEL JOINTS (TYPICAL UNLESS NOTED OTHERWISE). ALL PANEL JOINTS ARE ½" WIDE. PROVIDE ¾" CHAMFER AT ALL PANEL JOINTS.
6. EXTERIOR PANELS ARE VIEWED FROM INSIDE LOOKING OUT. SEE S2.1 FOR ELEVATION MARKS.
7. VERIFY ALL OPENING DIMENSIONS PRIOR TO FORMING AND CONSTRUCTING OF PANELS.
8. COORDINATE LOCATIONS OF ALL EMBEDDED ITEMS PRIOR TO FORMING AND POURING PANELS.
9. COORDINATE ALL EMBEDDED ITEMS W/ ROOF AND 2nd FLOOR FRAMING PLANS AND DETAILS.
10. ALL INTERIOR EMBEDS ARE SHOWN SHADED.
11. TOL AND T/⅊ ELEVATIONS ARE REFERENCED FROM FINISH FLOOR.
12. DIMENSIONS NOT SHOWN SEE ARCH DRAWINGS.
13. INDICATES 1" EXTERIOR RECESS. SEE ARCHITECTURAL DRAWINGS FOR ADDITIONAL INFO.
14. FOR CONCRETE LINTEL REINFORCING SEE 11/S6.1 UNO.

LANGDON WILSON
ARCHITECTURE
PLANNING
INTERIORS

18800 VON KARMAN AVENUE, SUITE 200
IRVINE, CALIFORNIA 92612-1517
949 - 833 - 9193

STRUCTURAL
KPFF 949 - 252 - 1022
MECHANICAL
TKSC 949 - 756 - 0565
ELECTRICAL
GLP 714 - 751 - 1851
LANDSCAPE
FRANK RADMACHER 714 - 832 - 1774
CIVIL ENGINEER
IKE CONSULTING 714 - 241 - 0606
AUDIO / VISUAL
VENEKLASEN ASSOCIATES 310 - 450 - 1733
DATA TELEPHONE
PLANNET CONSULTING 714 - 982 - 5800

CITY OF FONTANA
DEVELOPMENT SERVICES
ORGANIZATION BUILDING

8353 SIERRA AVENUE FONTANA, CALIFORNIA

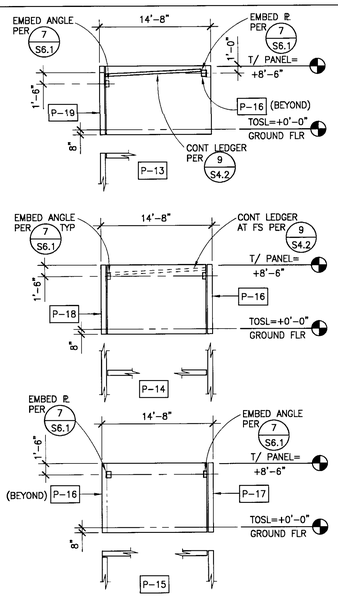

TRASH ENCLOSURE PANEL ELEVATIONS

1/8"=1'-0" | 8

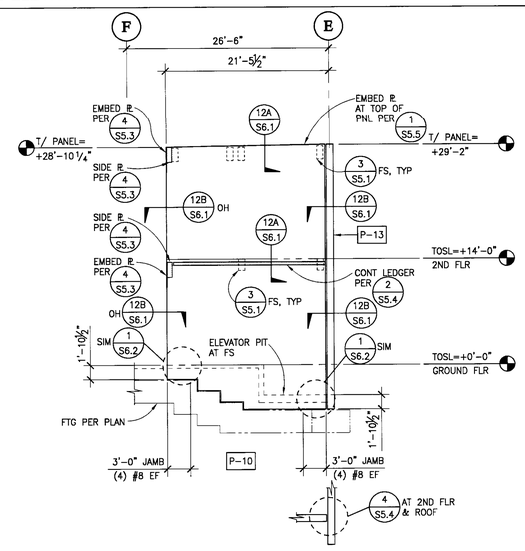

INTERIOR WALL ELEVATION AT PANEL P-10

1/8"=1'-0" | 5

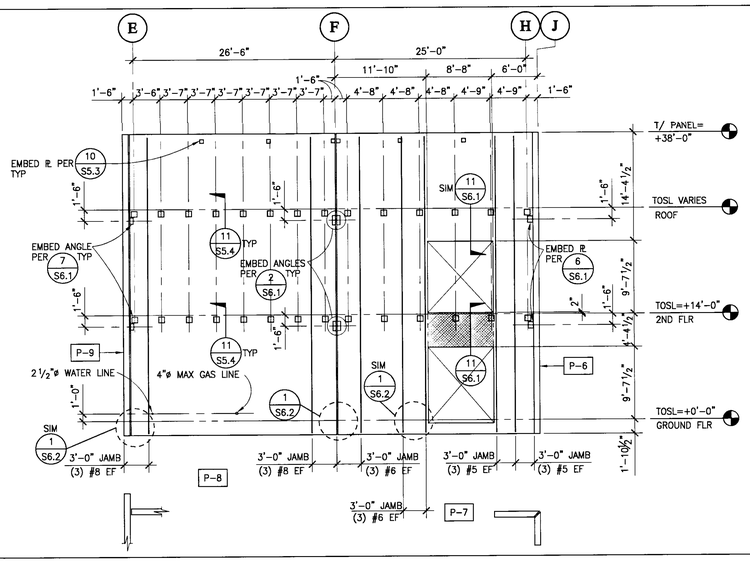

APPROVED
MAY 1 1 2006
BUILDING & SAFETY
CITY OF FONTANA

WALL ELEVATION AT PANEL P-7, P-8

1/8"=1'-0" | 2

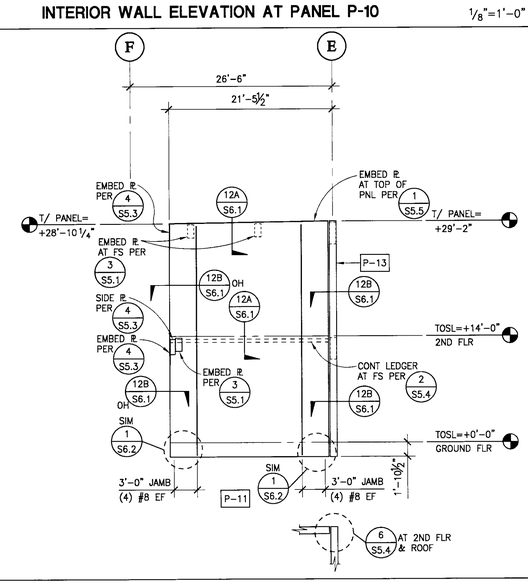

INTERIOR WALL ELEVATION AT PANEL P-11

1/8"=1'-0" | 6

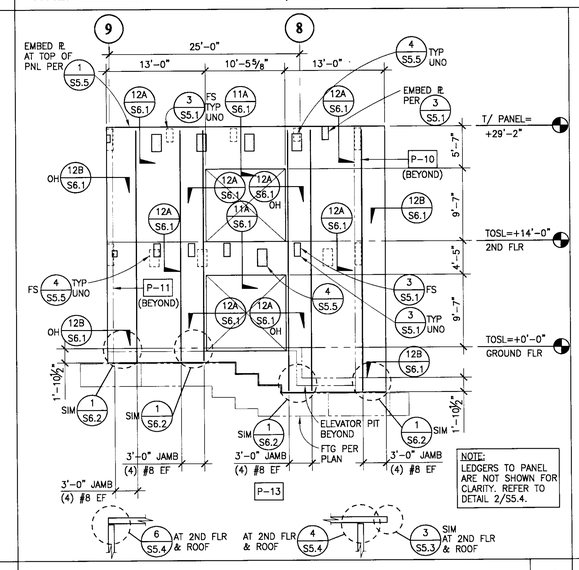

INTERIOR WALL ELEVATION AT PANEL P-13

1/8"=1'-0" | 4

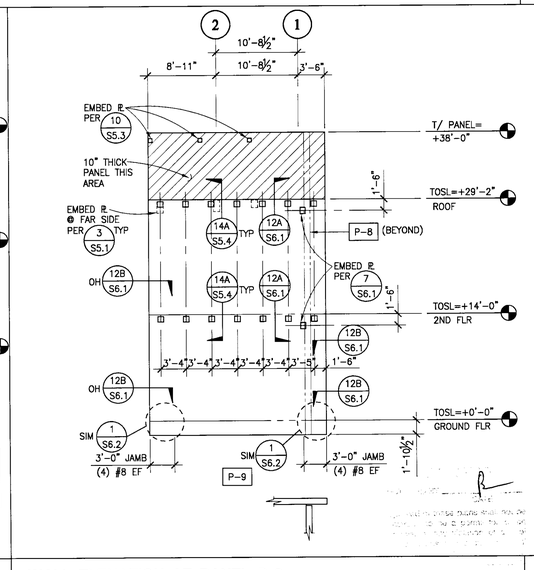

WALL ELEVATION AT PANEL P-9

1/8"=1'-0" | 3

REV.	DATE	ISSUED FOR	REV.	DATE	ISSUED FOR
	12-5-05	PLAN CHECK			
	02-06-06	PC RESUBMIT.			
	03-10-06	2ND PC RESUBMIT.			
	04-17-06	PERMIT SET			
	04-17-06	BID SET			

Stamp

REGISTERED PROFESSIONAL ENGINEER ROBERT JAMES FEDORCHAK No. 4306 Exp. 12/31/07 STRUCTURAL STATE OF CALIFORNIA

DATE: 03/27/06 SCALE: AS NOTED
DRAWN BY: FS
JOB NO. L454-000 CADD TITLE: S3.1

SHEET TITLE:
PRECAST TILT-UP PANEL ELEVATIONS

SHEET NUMBER:
S3.1

©Copyright 2005 Langdon Wilson

04-17-06
PERMIT SET / BID SET

JOB # 14-0312 | JOB NAME FONTANA | FILE PATH & NAME L:\PROJECTS\2004\14-0312\S3-1.DWG | PLOTTED DATE & TIME MAR 21, 2006 7:38:48 PM | PLOTTED BY TT | PLOT SCALE 1=1 | PLOT DATE --- | REV. BY RF
NOTES: x_panel elev notes, 14031218.

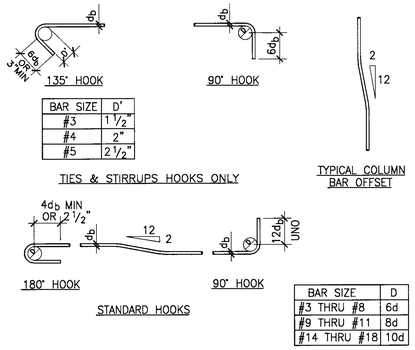

BAR SIZE	D'
#3	1 1/2"
#4	2"
#5	2 1/2"

BAR SIZE	D
#3 THRU #8	6d
#9 THRU #11	8d
#14 THRU #18	10d

REINFORCING BAR BENDING DETAIL — 1/2"=1'-0" — 13

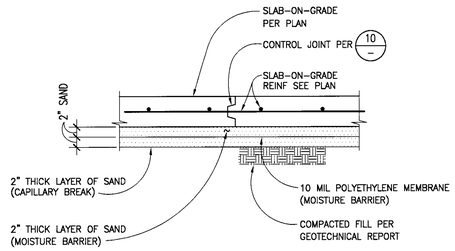

TYPICAL SLAB-ON-GRADE — 1"=1'-0" — 9

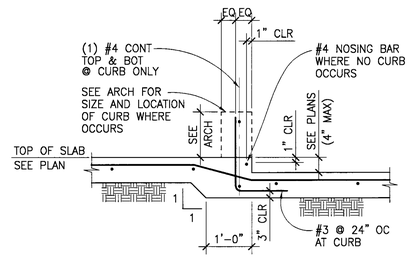

DEPRESSION IN SLAB ON GRADE — 1"=1'-0" — 5

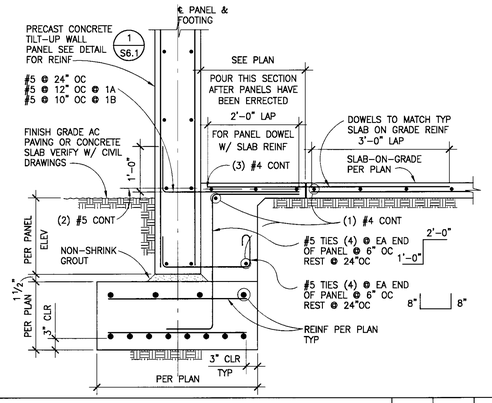

PANEL AT CONT FOOTING — 3/4"=1'-0" — 1 — 1A — 1B

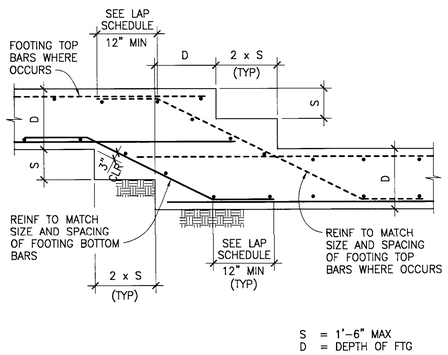

STEPPED FOOTING DETAIL — 1/2"=1'-0" — 14

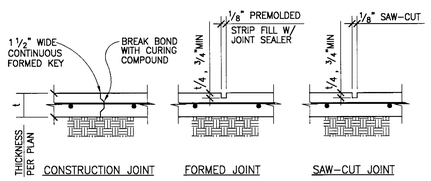

NOTES:
1. CONTROL JOINTS TO BE LOCATED AT COLUMN CENTER LINES AND AT 20'-0" OC MAX AND EVERY 400 SQUARE FEET.
2. IF SAW-CUT CONTROL JOINT TO BE USED, SAW-CUT WITHIN 24 HOURS OF POUR.
3. CONSTRUCTION JOINT TO BE LOCATED AS PER NOTES #1 AND #2 UNLESS SPECIFICALLY INDICATED ON PLANS.

SLAB ON GRADE CONTROL JOINTS — NTS — 10

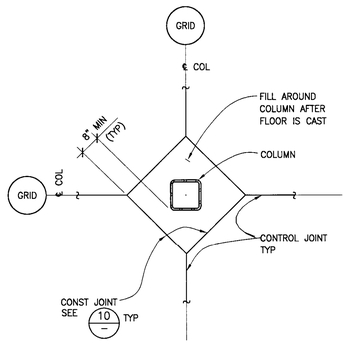

ISOLATION AT COLUMN AND SLAB ON GRADE — NTS — 6

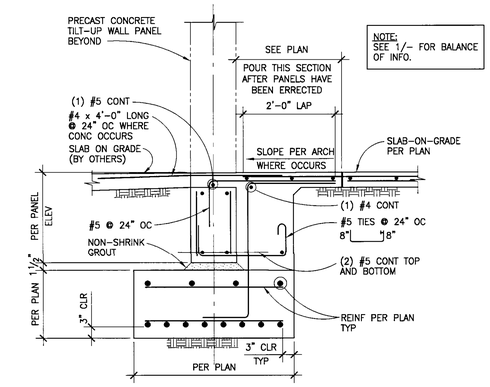

PANEL AT OPENING — 3/4"=1'-0" — 2 — 2A — 2B — 2C

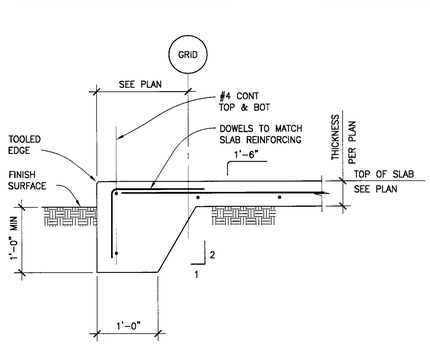

EDGE OF SLAB ON GRADE — NTS — 15

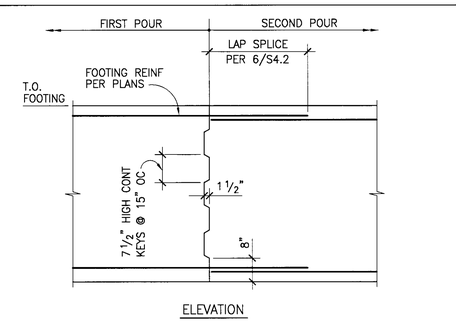

NOTE :
WHERE CONTINUOUS FOOTING IS UNDER A WALL, LOCATE CONSTRUCTION JOINT AT 1/4 OF THE CLEAR OPENING WIDTH ABOVE FROM FACE OF OPENING, OR IN MIDDLE 1/3 OF THE DISTANCE BETWEEN COLUMNS.

CONT FOOTING CONSTRUCTION JOINT — 1"=1'-0" — 7

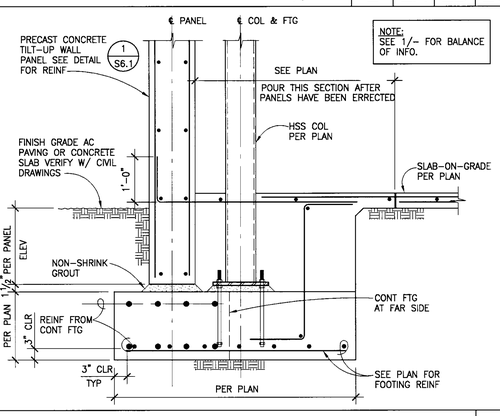

PANEL AT COLUMN LOCATION — 3/4"=1'-0" — 3

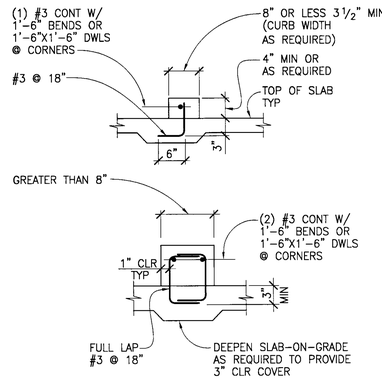

CONCRETE CURBS — 1"=1'-0" — 16

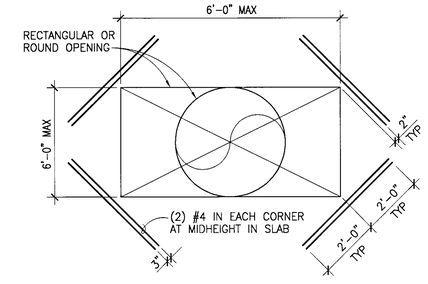

NOTE:
ELIMINATE BARS AND KEYED JOINT IF OPENING IS LESS THAN 2'-0"

OPENING IN SLAB ON GRADE — 1/2"=1'-0" — 12

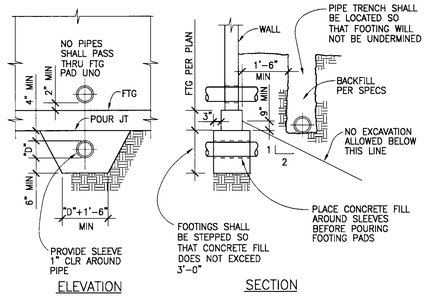

NOTES:
1. WHEN SEVERAL PIPES ARE EMBEDDED, MAINTAIN 2 DIAMETERS OR 6" MIN HORIZONTAL DISTANCE BETWEEN PIPES.
2. CONDUITS NEED TO BE SLEEVED PER THIS DETAIL. IT IS ACCEPTABLE TO GROUP CONDUITS OF THE SAME NATURE IN THE SAME SLEEVE.

PIPE TRENCH/FOOTING DETAIL — 1/2"=1'-0" — 8

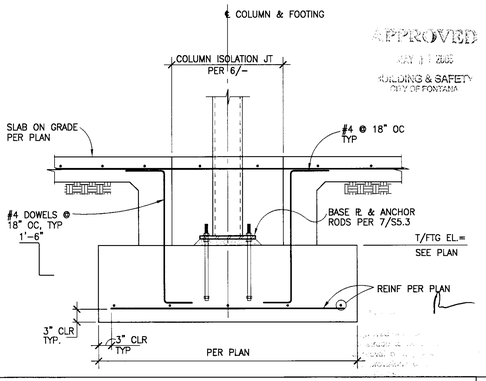

APPROVED
BUILDING & SAFETY
CITY OF FONTANA

SPREAD FOOTING DETAIL AT STEEL COLUMN — NTS — 4

LANGDON WILSON
ARCHITECTURE
PLANNING
INTERIORS
18800 VON KARMAN AVENUE, SUITE 200
IRVINE, CALIFORNIA 92612-1517
949 · 833 · 9193
STRUCTURAL
KPFF 949 · 252 · 1022
MECHANICAL
TKSC 949 · 756 · 0565
ELECTRICAL
CLP 714 · 751 · 1851
LANDSCAPE
FRANK RADMACHER 714 · 832 · 1774
CIVIL ENGINEER
IKE CONSULTING 714 · 241 · 0606
AUDIO / VISUAL
VENEKLASEN ASSOCIATES 310 · 450 · 1733
DATA TELEPHONE
PLANNET CONSULTING 714 · 982 · 5800

CITY OF FONTANA
DEVELOPMENT SERVICES
ORGANIZATION BUILDING
8353 SIERRA AVENUE FONTANA, CALIFORNIA

REV.	DATE	ISSUED FOR	REV.	DATE	ISSUED FOR
	12-5-05	PLAN CHECK			
	02-06-06	PC RESUBMIT.			
	03-10-06	2ND PC RESUBMIT.			
	04-17-06	PERMIT SET			
	04-17-06	BID SET			

Stamp

REGISTERED PROFESSIONAL ENGINEER
ROBERT JAMES FOURNIER
No. 4306
Exp. 12/31/07
STRUCTURAL
STATE OF CALIFORNIA

DATE: 03/27/06 SCALE: AS NOTED
DRAWN BY: FS
JOB NO. L454-000 CADD TITLE: S4.1

SHEET TITLE:
TYPICAL CONCRETE DETAILS

SHEET NUMBER:
S4.1

©Copyright 2005 Langdon Wilson

PERMIT SET / BID SET 04-17-06

JOB # 14-0312 FONTANA
XREFS: 14037-TB,
FILE PATH & NAME: L:\PROJECTS\2004\14-0312\S4-1.DWG
PL LD DATE TIME FEB. 03, 2006 11:29:28 AM

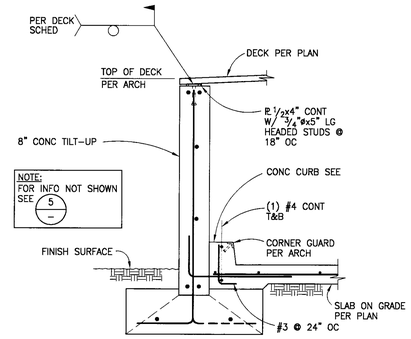

SECTION AT TRASH ENCLOSURE

3/4"=1'-0" | 11

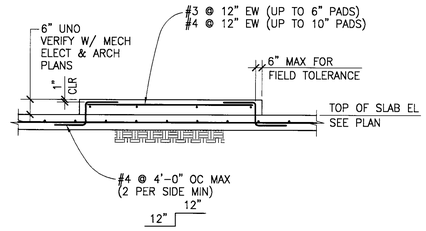

MECHANICAL PAD ON GRADE

NTS | 8

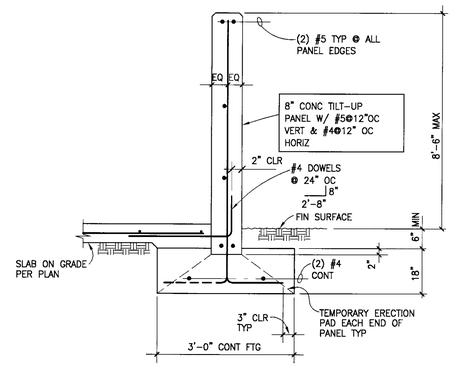

SECTION AT TRASH ENCLOSURE

3/4"=1'-0" | 5

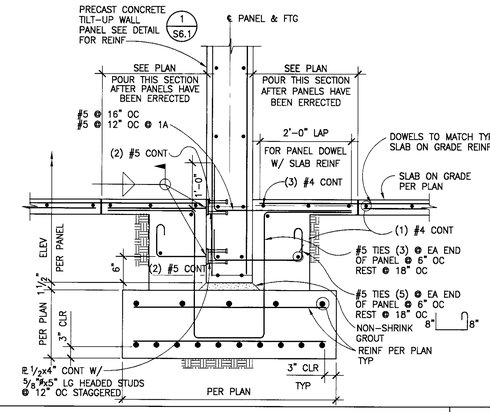

INTERIOR PANEL AT CONT FOOTING

3/4"=1'-0" | 1 | 1A

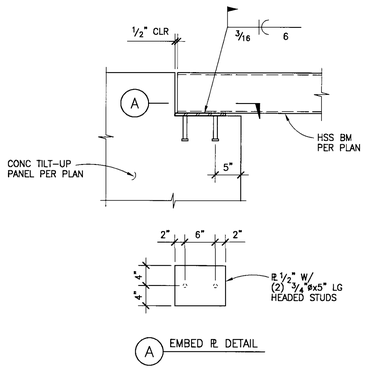

BEAM TO WALL DETAIL AT TRASH ENCLOSURE

1"=1'-0" | 12

CONCRETE			CLASS "B" TENSION LAP SPLICE LENGTH								
CLASS "B" TENSION SPLICE		BAR SIZE GR 60	3	4	5	6	7	8	9	10	11
		BAR DIAMETER, d_b (in)	0.375	0.500	0.625	0.750	0.875	1.000	1.128	1.270	1.410
3000		TOP BAR	2'-4"	3'-1"	3'-11"	4'-8"	6'-9"	7'-9"	8'-9"	9'-10"	10'-11"
		BOTTOM BAR	1'-10"	2'-5"	3'-0"	3'-7"	5'-3"	6'-0"	6'-9"	7'-7"	8'-5"
4000		TOP BAR	2'-0"	2'-8"	3'-4"	4'-1"	5'-11"	6'-9"	7'-7"	8'-6"	9'-5"
		BOTTOM BAR	1'-7"	2'-1"	2'-7"	3'-1"	4'-6"	5'-2"	5'-10"	6'-7"	7'-3"
5000		TOP BAR	1'-10"	2'-5"	3'-0"	3'-8"	5'-3"	6'-0"	6'-9"	7'-7"	8'-6"
		BOTTOM BAR	1'-5"	1'-10"	2'-4"	2'-10"	4'-1"	4'-8"	5'-3"	5'-10"	6'-6"

NOTES:

1. ALL REINFORCING MUST MEET ONE OF THE FOLLOWING CONDITIONS.
   A. CASE I: THE CLEAR SPACING OF THE BARS BEING SPLICED IS NOT LESS THAN ONE BAR DIAMETER (d_b), CLEAR COVER NOT LESS THAN ONE ONE BAR DIAMETER (d_b), AND STIRRUPS OR TIES THROUGHOUT THE SPLICE LENGTH.
   B. OR CASE II: THE CLEAR SPACING OF THE BARS BEING SPLICED IS NOT LESS THAN TWO BAR DIAMETERS ($2d_b$) AND THE CLEAR COVER IS NOT LESS THAN ONE BAR DIAMETER (d_b).
   C. FOR ALL OTHER CASES MULTIPLY THE SPLICES SHOWN BY 1.5.
2. THE ABOVE VALUES ARE FOR NORMAL WEIGHT CONCRETE.
3. THE ABOVE VALUES ARE FOR UNCOATED REINFORCEMENT.
4. TOP BARS ARE HORIZONTAL REINFORCEMENT WITH MORE THAN 12" OF NEW CONCRETE PLACED BELOW THE BAR.
5. BOTTOM BARS ARE ALL VERTICAL BARS, AND HORIZONTAL REINFORCEMENT WITH LESS THAN 12" OF NEW CONCRETE PLACED BELOW THE BAR.

NORMAL WEIGHT CONCRETE LAP SPLICE SCHEDULE (CLASS B)

6

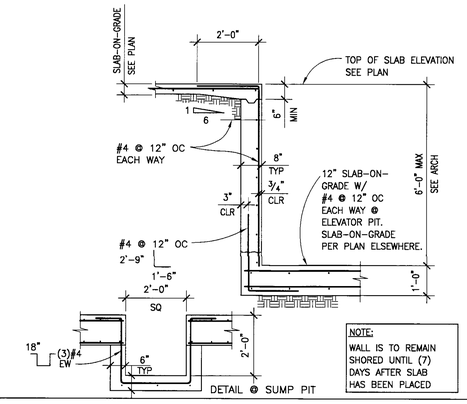

ELEVATOR PIT/RETAINING WALL DETAIL

1/2"=1'-0" | 2

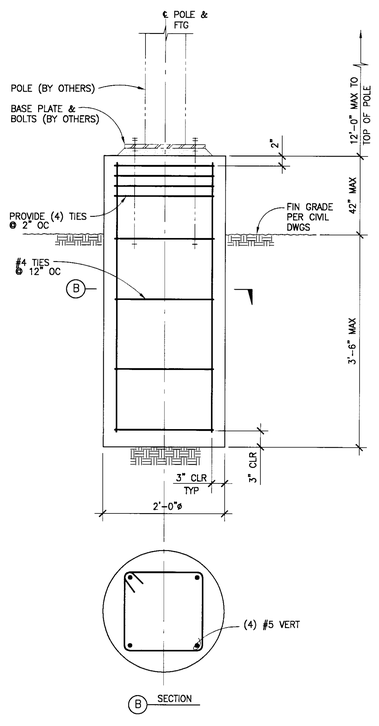

TYPICAL LIGHT POLE FOUNDATION DETAIL

1"=1'-0" | 13

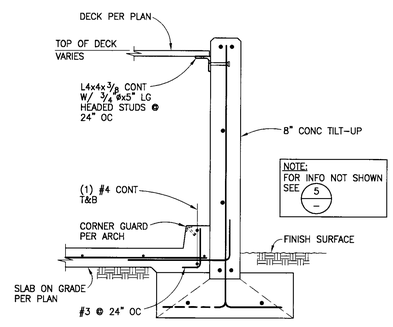

SECTION AT TRASH ENCLOSURE

3/4"=1'-0" | 9

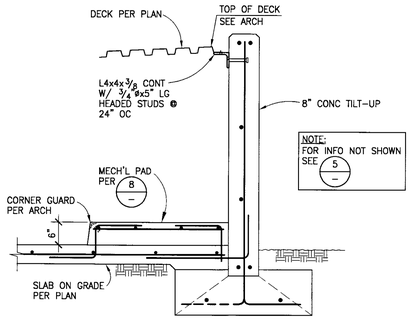

SECTION AT TRASH ENCLOSURE

3/4"=1'-0" | 10

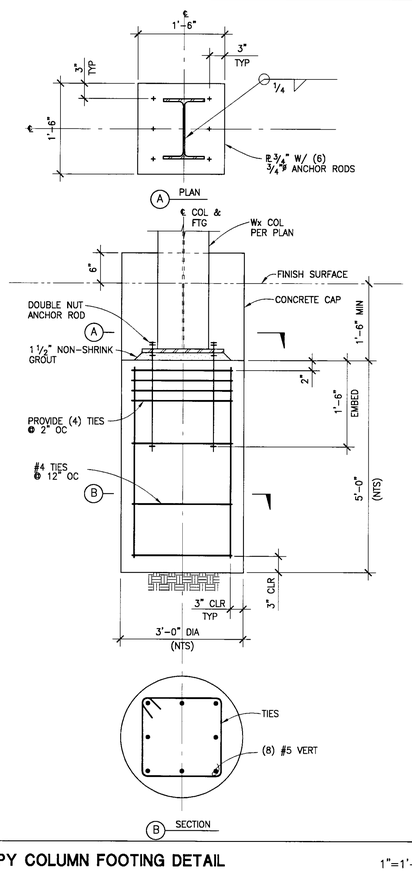

CANOPY COLUMN FOOTING DETAIL

1"=1'-0" | 7

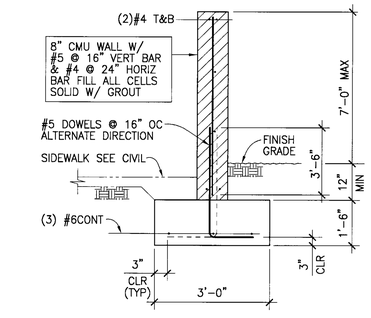

TYP CMU WALL

1"=1'-0" | 3

APPROVED
BUILDING & SAFETY
CITY OF FONTANA

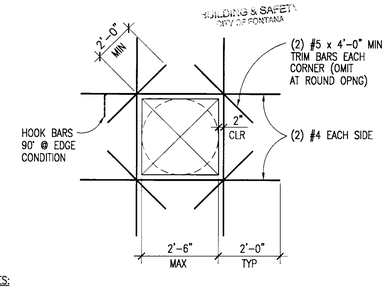

NOTES:

1. SEE WALL ELEVATIONS OR PLANS FOR REINFORCEMENT AT LARGER OPENINGS.
2. CLUSTERS OF SMALL HOLES WHOSE OVERALL MEASUREMENT EXCEED 1'-0" SHOULD BE REINFORCED AS ONE OPENING.
3. NO OPENING IN SLAB TO BE LOCATED CLOSER THAN 2'-0" FROM COLUMN FACE UNLESS APPROVED BY THE STRUCTURAL ENGINEER.

CONCRETE WALL/SLAB OPENING DETAIL

1/2"=1'-0" | 4

LANGDON WILSON
ARCHITECTURE
PLANNING
INTERIORS

18800 VON KARMAN AVENUE, SUITE 200
IRVINE, CALIFORNIA 92612-1517
949 · 833 · 9193

STRUCTURAL
KPFF 949 · 252 · 1022
MECHANICAL
TKSC 949 · 756 · 0565
ELECTRICAL
CLP 714 · 751 · 1851
LANDSCAPE
FRANK RADMACHER 714 · 832 · 1774
CIVIL ENGINEER
IKE CONSULTING 714 · 241 · 0606
AUDIO / VISUAL
VENEKLASEN ASSOCIATES 310 · 450 · 1733
DATA TELEPHONE
PLANNET CONSULTING 714 · 982 · 5800

CITY OF FONTANA
DEVELOPMENT SERVICES
ORGANIZATION BUILDING

8353 SIERRA AVENUE FONTANA, CALIFORNIA

REV.	DATE	ISSUED FOR	REV.	DATE	ISSUED FOR
	12-5-05	PLAN CHECK			
	02-06-06	PC RESUBMIT.			
	03-10-06	2ND PC RESUBMIT.			
	04-17-06	PERMIT SET			
	04-17-06	BID SET			

Stamp

REGISTERED PROFESSIONAL ENGINEER
KEVIN T. JUNE
No. 14306
Exp. 12/31/07
STRUCTURAL
STATE OF CALIFORNIA

DATE: 03/27/06 SCALE: AS NOTED
DRAWN BY: FS
JOB NO. L454-000 CADD TITLE: S4.2

SHEET TITLE:
TYPICAL CONCRETE DETAILS

SHEET NUMBER:
S4.2

©Copyright 2005 Langdon Wilson

PERMIT SET / BID SET 04-17-06

JOB # 14-0312
XREFS: 140312TB,
SCALE NOTE: FONTANA
FILE PATH & NAME: L:\PROJECTS\2004\14-0312\S4-2.DWG
PLOTTED: FEB. 03, 2006 11:30:15 AM
PLOT SCALE: 1=1
DRAWN BY: RF
BROWN: 11

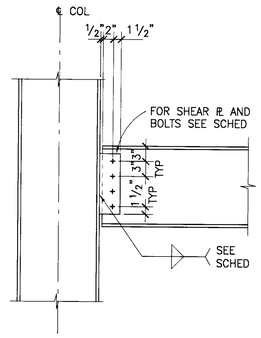

BEAM TO COLUMN FLANGE (A)

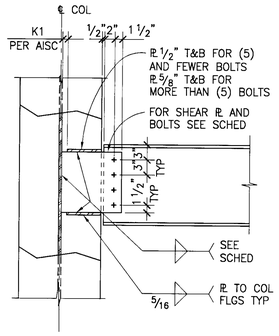

BEAM TO COLUMN WEB (B)

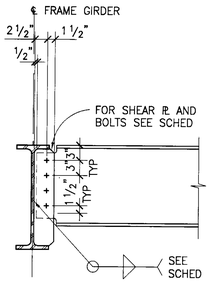

BEAM TO MOMENT FRAME GIRDER (C)

NOTE:
PROVIDE FULL HEIGHT STIFFENER PL WHERE INDICATED ON PLANS THUS

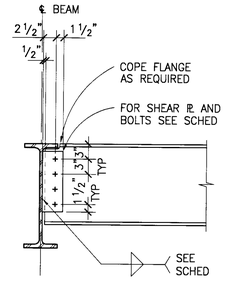

BEAM TO BEAM (D)

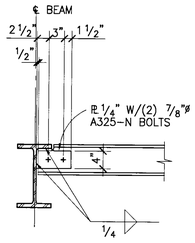

W6 OR C6 CONNECTION (E)

STANDARD BOLTED CONNECTION SCHEDULE					
BEAM SIZE	NO.& SIZE OF BOLTS REQUIRED	PLATE THICKNESS	WELD SIZE	CONN. CAPACITY A325-N	CONN. CAPACITY A325-SC
W6 W8 C8	(2) 7/8"ø	1/4"	1/4"	11.1K	9.0K
W10 C10	(2) 7/8"ø	1/4"	1/4"	11.1K	9.0K
W12 C12	(3) 7/8"ø	1/4"	1/4"	22.3K	18.1K
W14	(3) 7/8"ø	1/4"	1/4"	22.3K	18.1K
W16	(4) 7/8"ø	5/16"	1/4"	35.7K	28.9K
W18	(4) 7/8"ø	5/16"	1/4"	35.7K	28.9K
W21	(5) 7/8"ø	5/16"	1/4"	49.3K	39.9K
W24	(6) 7/8"ø	3/8"	5/16"	62.9K	50.9K
W27	(7) 7/8"ø	3/8"	5/16"	76.5K	61.9K
W30	(8) 7/8"ø	7/16"	3/8"	89.8K	72.7K
W33	(9) 7/8"ø	7/16"	3/8"	103K	83.3K
W36	(9) 7/8"ø	7/16"	3/8"	103K	83.3K

CONNECTION NOTES:

1. ALL BOLTS TO BE ASTM A325-SC FULLY PRETENSIONED AND INSPECTED PER AISC.
2. CONNECTION PLATES TO HAVE AISC STANDARD ROUND HOLES UNLESS NOTED OTHERWISE.
3. ALL CONNECTION PLATE MATERIAL TO BE A36.
4. [X] SHOWN ON PLANS INDICATES NUMBER OF BOLTS REQUIRED. IF NOT SHOWN THEN USE THE NUMBER OF BOLTS SHOWN IN THE TABLE ABOVE.

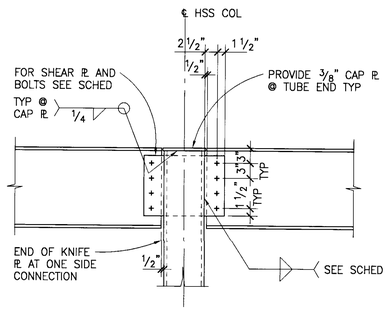

GIRDER TO HSS COLUMN (F)

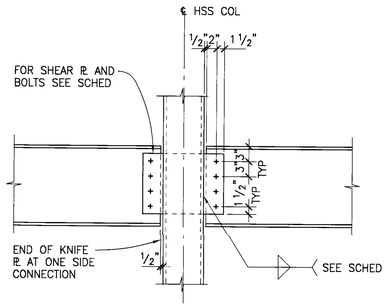

GIRDER TO HSS COLUMN (G)

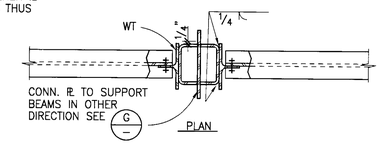

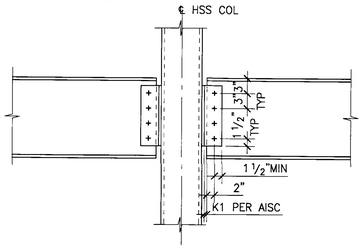

BEAM TO HSS COLUMN (H)

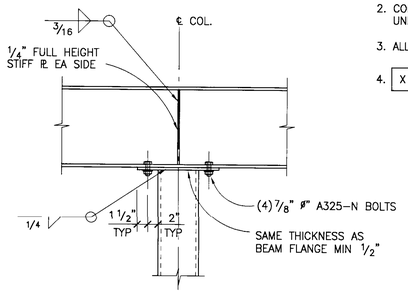

BEAM TO PIPE OR TUBE COLUMN (J)

TYPICAL BOLTED BEAM CONNECTION DETAILS

1"=1'-0" | 1

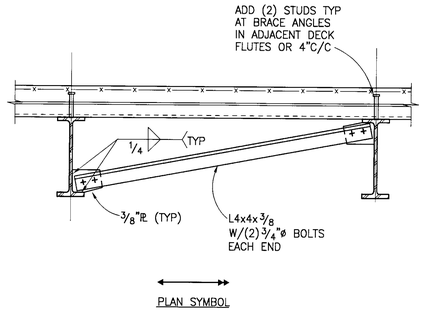

LATERAL BRACE DETAIL 1"=1'-0" | 6

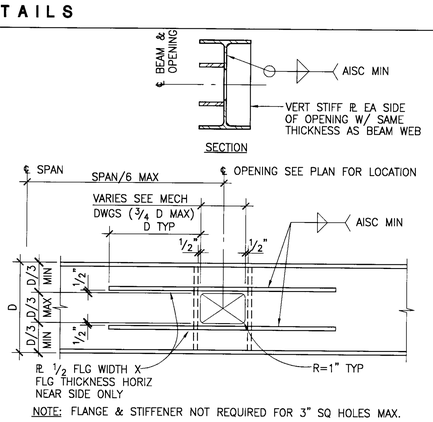

NOTE: FLANGE & STIFFENER NOT REQUIRED FOR 3" SQ HOLES MAX.

BEAM WEB OPENING DETAIL 1"=1'-0" | 4

STANDARD BOLTED SHEAR TAB CONNECTION SCHEDULE		
BEAM SIZE	EMB PL SIZE	# ROWS OF STUDS REQ'D
W8 C5 C6 C8	3/4x10"x1'-6"	2
W10 C10	3/4x10"x1'-6"	2
W12 C12	3/4x10"x1'-6"	2
W14	3/4x10"x1'-6"	2
W16	3/4x10"x1'-6"	3
W18	3/4x10"x1'-6"	3
W21	3/4x10"x2'-0"	4
W24	3/4x10"x2'-6"	5
W27	3/4x10"x3'-0"	6
W30	3/4x10"x3'-6"	7
W33	3/4x10"x3'-6"	7
W36	3/4x10"x3'-6"	7

1. ALL CONNECTION MATERIAL IS A36 STEEL
2. SPECIAL INSPECTION REQ'D FOR EMBEDDED STUDS

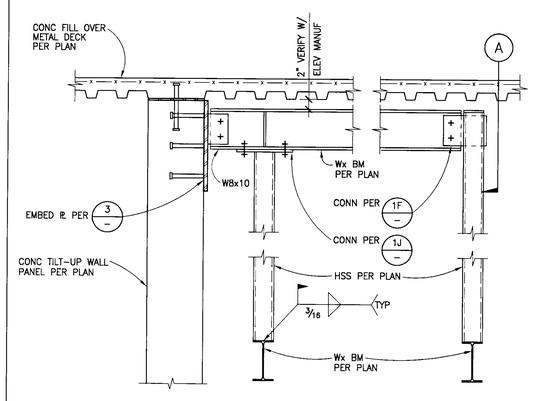

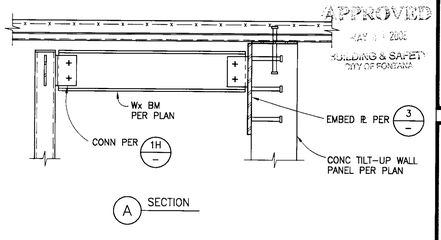

SECTION AT ELEVATOR SHAFT 1"=1'-0" | 2

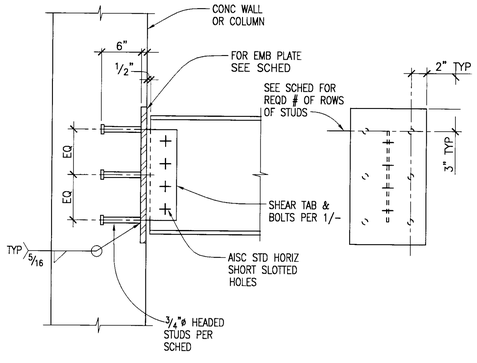

TYPICAL BEAM TO EMBED PLATE CONNECTION 3

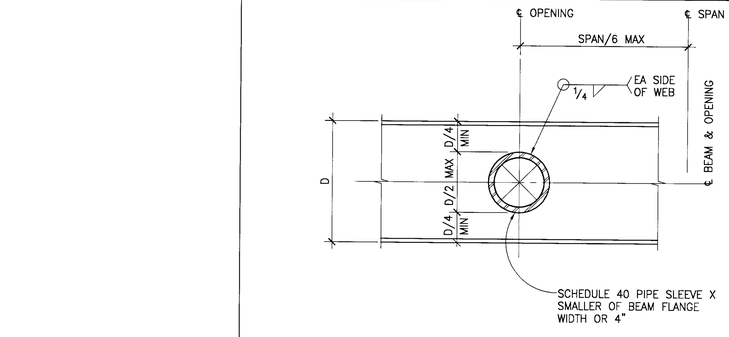

NOTE:
WHERE ROUND OPENING DIAMETER IS D/6 OR LESS, REINFORCING SHOWN IS NOT REQUIRED.

ROUND BEAM WEB OPENING 1"=1'-0" | 5

LANGDON WILSON
ARCHITECTURE
PLANNING
INTERIORS

18800 VON KARMAN AVENUE, SUITE 200
IRVINE, CALIFORNIA 92612-1537
949 · 833 · 9193

STRUCTURAL
KPFF 949 · 252 · 5022
MECHANICAL
TKSC 949 · 756 · 0565
ELECTRICAL
GLP 714 · 751 · 1851
LANDSCAPE
FRANK RADMACHER 714 · 832 · 1774
CIVIL ENGINEER
IKE CONSULTING 714 · 241 · 0606
AUDIO / VISUAL
VENEKLASEN ASSOCIATES 310 · 450 · 1733
DATA TELEPHONE
PLANNET CONSULTING 714 · 982 · 5800

CITY OF FONTANA
DEVELOPMENT SERVICES
ORGANIZATION BUILDING
8353 SIERRA AVENUE FONTANA, CALIFORNIA

REV.	DATE	ISSUED FOR	REV.	DATE	ISSUED FOR
	12-5-05	PLAN CHECK			
	02-06-06	PC RESUBMIT.			
	03-10-06	2ND PC RESUBMIT.			
	04-17-06	PERMIT SET			
	04-17-06	BID SET			

Stamp

REGISTERED PROFESSIONAL ENGINEER JAMES E. FOSTER No. 4306 Exp. 12/31/07 STRUCTURAL STATE OF CALIFORNIA

DATE: 03/27/06 SCALE: AS NOTED
DRAWN BY: FS
JOB NO. L454-000 CADD TITLE: S5.1

SHEET TITLE:
TYPICAL STEEL DETAILS

SHEET NUMBER:
S5.1

©Copyright 2005 Langdon Wilson

PERMIT SET / BID SET 04-17-06

JOB # 15-0038 | JOB NAME FONTANA | FILE PATH & NAME I:\PROJECTS\2004\14-0312\S5-1.DWG | PLOTTED DATE & TIME MAR. 24, 2006 11:41:45 AM | PLOTTED BY FS | PLOT SCALE 1=1 | PRESSURE 1" | XREFS 140312B; | DRAWN BY RF | DWG. No. 1T

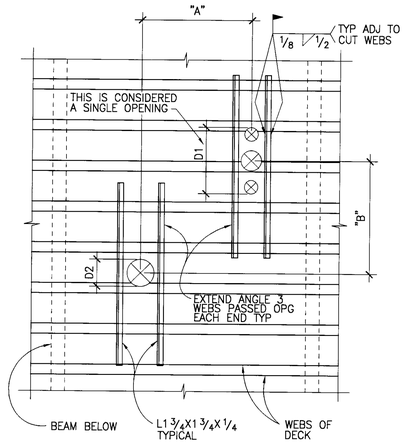

NOTES:
1. DO NOT CUT MORE THAN 2 ADJACENT WEBS.
2. HOLES LESS THAN 6" IN DIAMETER AND CUTTING NO MORE THAN 1 WEB NEED NO REINFORCING.
3. ANGLES SHALL BE PLACED ON TOP OF DECK.
4. IF DIMENSION "A" IS GREATER THAN 4D1, 4D2, OR 32" WHICHEVER IS LARGER, THEN THERE IS NO RESTRICTION ON DIMENSION "B".
5. IF DIMENSION "B" IS GREATER THAN 4D1, 4D2, OR 32" WHICHEVER IS LARGER, THEN THERE IS NO RESTRICTION ON DIMENSION "A".
6. IF DIMENSIONS "A" AND "B" ARE LESS THAN 4D1, 4D2, OR 32" WHICHEVER IS LARGER, THE OPENING GROUP WILL BE CONSIDERED AS A SINGLE HOLE, AND MUST BE REINFORCED AS REQUIRED FOR THE LARGER OPENING.

DECK SLEEVE DETAIL 1"=1'-0" **10**

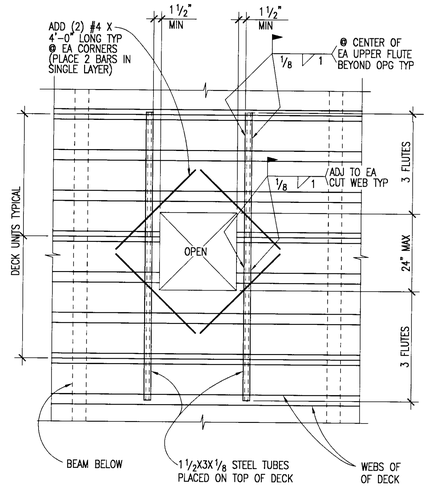

NOTE:
1. IF THE OPENING OR GROUP OF OPENING OCCURS IN ONE DECKING UNIT, THE OPENING OR OPENING GROUP MAY BE CUT PRIOR TO POURING OF CONCRETE.
2. IF, AS SHOWN IN THE DETAIL ABOVE, THE OPENING OR OPENING GROUP CUTS THROUGH TWO DECKING UNITS, THE DECKING SHALL NOT BE CUT UNTIL CONCRETE HAS BEEN PLACED AND CURED. AT THE TIME OF POURING, SUITABLE SLEEVES OR BULKHEADS SHALL BE PLACED AROUND THE OPENING.
3. ADD REBAR AT CORNERS OF OPENING.
4. WHEN THE MAXIMUM DIMENSION OF AN OPENING OR OPENING GROUP EXCEEDS 24", PLACE HEADER BEAM AROUND OPENING.

DECK BLOCK OUT DETAIL 1"=1'-0" **8**

MARK	STEEL DECK TYPE	GAGE	TOTAL THICKNESS (t)	CONC TYPE	REINF	STEEL DECK WELDING PATTERN				MAX UNSHORED SPAN		
						END	INT.	EDGE	SIDELAP	SINGLE SPAN	DOUBLE SPAN	TRIPLE SPAN
D1	VERCO B FORMLOK	20	4"	f'c=4000 psi, LIGHTWEIGHT	WWF 6x6-D14xD14	(4)3/4"ø PUDDLE WELDS PER SHT	(4)3/4"ø PUDDLE WELDS PER SHT	3/4"ø PUDDLE WELDS @ 12" OC	BUTTON PUNCH @ 36" OC	6'-6"	8'-0"	8'-6"
D2	VERCO W2 FORMLOK	20	4 1/2"	f'c=4000 psi, LIGHTWEIGHT	WWF 6x6-D14xD14	(4)3/4"ø PUDDLE WELDS PER SHT	(4)3/4"ø PUDDLE WELDS PER SHT	3/4"ø PUDDLE WELDS @ 12" OC	BUTTON PUNCH @ 36" OC	8'-0"	9'-0"	10'-0"
D3	VERCO HSB-36	18	PER ARCH	N/A	N/A	(4)3/4"ø PUDDLE WELDS PER SHT	(4)3/4"ø PUDDLE WELDS PER SHT	3/4"ø PUDDLE WELDS @ 12" OC	BUTTON PUNCH @ 24" OC	8'-0"	9'-6"	9'-6"

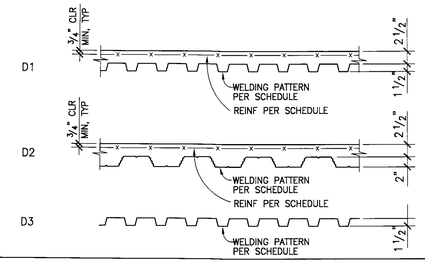

NOTE:
1. SEE GENERAL NOTES FOR ADDITIONAL INFORMATION.
2. NO SKEWING OF DECK TO COLLECTOR SUPPORTS IS PERMITTED

STEEL DECK SCHEDULE 1"=1'-0" **1**

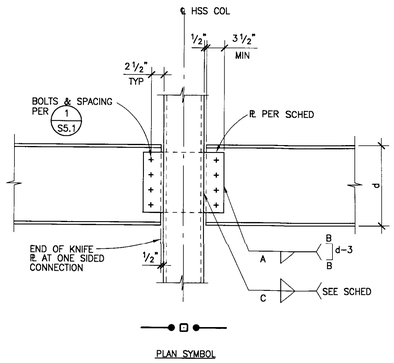

DRAG CONNECTION DETAIL 1"=1'-0" **5**

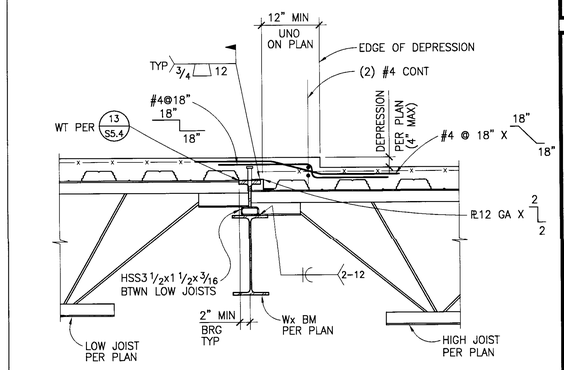

SLAB DEPRESSION DECK PARALLEL TO BM 1"=1'-0" **2**

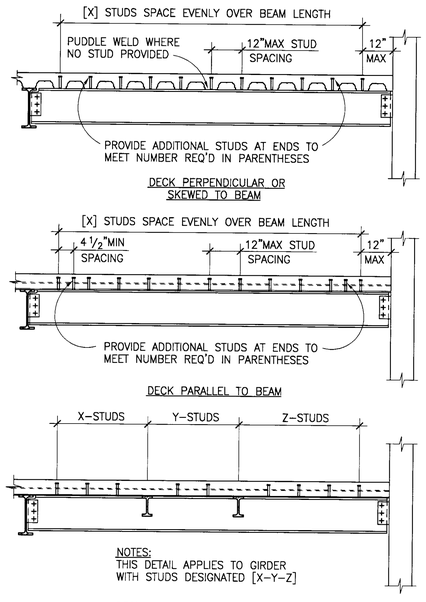

NOTES:
1. THE MINIMUM NUMBER OF STUDS REQUIRED IS SHOWN AS [X] ON FRAMING PLANS OR 12"O.C. WHERE STUDS ARE REQUIRED. ADDITIONAL STUDS MAY BE REQUIRED TO MEET THE ABOVE MAXIMUM SPACING REQUIREMENTS.
2. IF TWO STUDS ARE REQUIRED IN ONE FLUTE THE TRANSVERSE SPACING SHALL BE 3" MINIMUM.
3. UNLESS NOTED [O], BEAMS AND GIRDERS SHALL HAVE 3/4"øx4" LONG HEADED SHEAR STUDS AT W2 DECK & 3/4"øx3" LONG HEADED STUDS AT B DECK.

COMPOSITE BEAM STUD SPACING 1/2"=1'-0" **13**

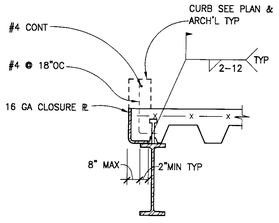

PARALLEL TO DECK DETAIL

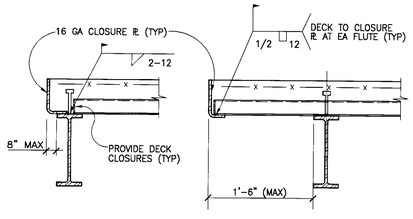

PERPENDICULAR TO DECK DETAIL

TYPICAL INTERIOR EDGE FORM DETAIL 1"=1'-0" **9**

PLATE SCHEDULE					
BEAM SIZE	℞ THICKNESS	SIZE A	LENGTH B	SIZE C	REMARKS
W16x26 W16x31 W18x35 W18x40 W21x44	5/16	1/4	3	1/4	
W18x50 W18x55 W21x50	5/16	5/16	5	1/4	
W18x35 W18x50 W21x57	5/16	5/16	7	1/4	LINE 9 @ FLOOR LINE E @ FLOOR
W24x55 W24x62	3/8	5/16	4	5/16	
W18x65 W18x76 W24x62 W24x68	3/8	3/8	11	5/16	LINE J @ FLOOR
W18x97	9/16	3/8	20	1/4	

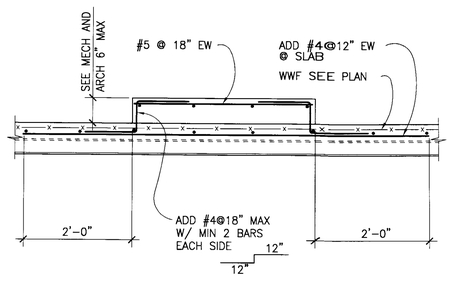

MECHANICAL PAD DETAIL 1"=1'-0" **7**

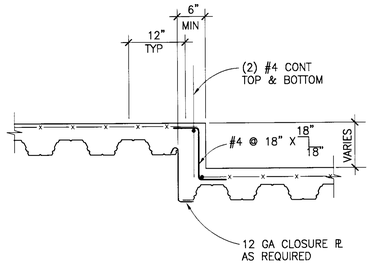

APPROVED
MAY 1 2006
BUILDING & SAFETY
CITY OF FONTANA

EDGE OF DEPRESSION PARALLEL TO DECK 1"=1'-0" **4**

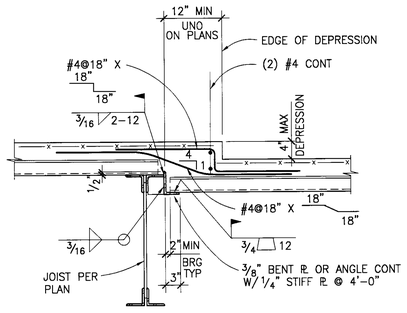

SLAB DEPRESS-DECK PERPEND TO BM 1"=1'-0" **3**

LANGDON WILSON
ARCHITECTURE
PLANNING
INTERIORS

18800 VON KARMAN AVENUE, SUITE 200
IRVINE, CALIFORNIA 92612-1517
949 - 833 - 9193

STRUCTURAL
KPFF 949 - 252 - 1022
MECHANICAL
TKSC 949 - 756 - 0565
ELECTRICAL
GLP 714 - 751 - 1851
LANDSCAPE
FRANK RADMACHER 714 - 832 - 1774
CIVIL ENGINEER
IKE CONSULTING 714 - 241 - 0606
AUDIO / VISUAL
VENEKLASEN ASSOCIATES 310 - 450 - 1733
DATA TELEPHONE
PLANNET CONSULTING 714 - 982 - 5800

CITY OF FONTANA
DEVELOPMENT SERVICES
ORGANIZATION BUILDING
8353 SIERRA AVENUE FONTANA, CALIFORNIA

REV.	DATE	ISSUED FOR	REV.	DATE	ISSUED FOR
	12-5-05	PLAN CHECK			
	02-06-06	PC RESUBMIT.			
	03-10-06	2ND PC RESUBMIT.			
	04-17-06	PERMIT SET			
	04-17-06	BID SET			

Stamp

DATE: 03/27/06 SCALE: AS NOTED
DRAWN BY: FS
JOB NO. L454-000 CADD TITLE: S5.2
SHEET TITLE:
TYPICAL STEEL DETAILS
SHEET NUMBER:
S5.2

©Copyright 2005 Langdon Wilson

PERMIT SET / BID SET 04-17-06

JOB # 14-0312
SHEET: 14031216
NAME: FONTANA
DATE: FEB. 03, 2006 11:32:22 AM
PLOTTED: 1=1
PLOT: ---
PAGE & NAME: L:\PROJECTS\2004\14-0312\S5-2.DWG

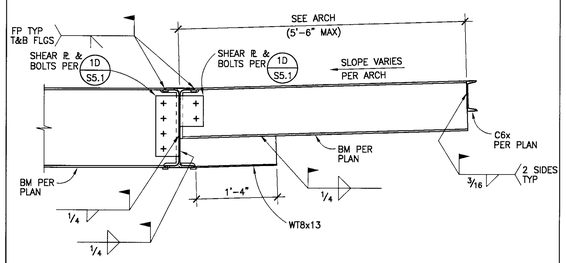

FRAMING AT ROOF OVERHANG 1"=1'-0" 13

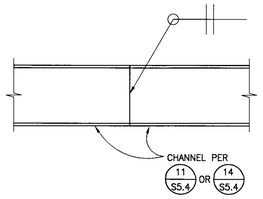

DRAG CHANNEL SPLICE DETAIL 1"=1'-0" 14

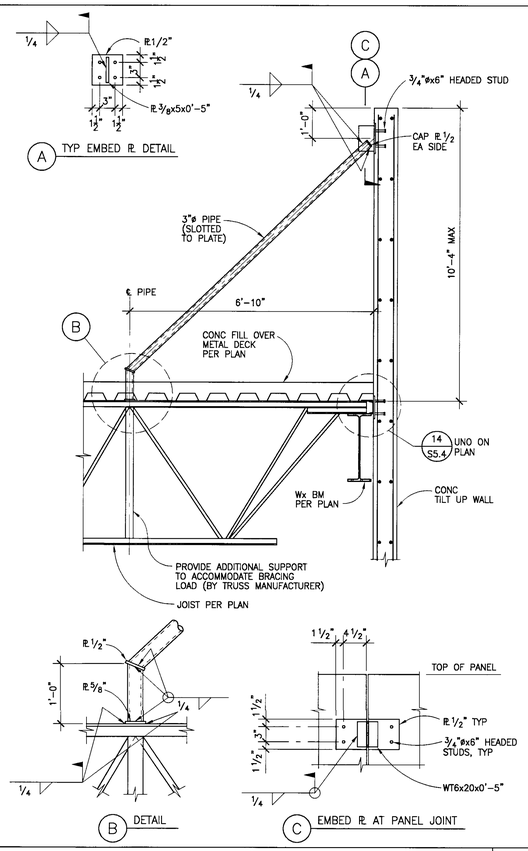

KICKER TO PARAPET DETAIL 1/2"=1'-0" 10

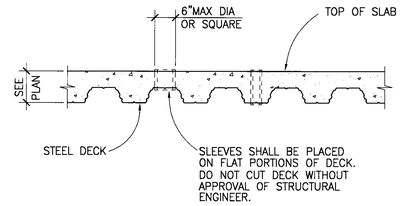

TYPICAL DECK SLEEVE 1"=1'-0" 5

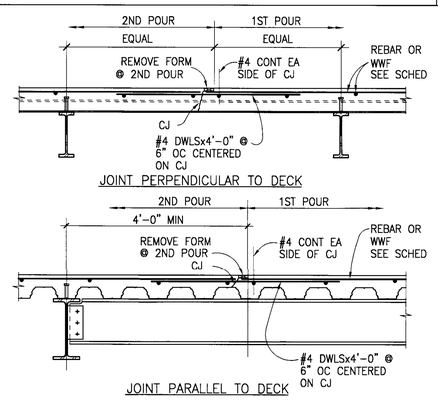

CONSTRUCTION JOINT FOR SLAB 3/4"=1'-0" 6

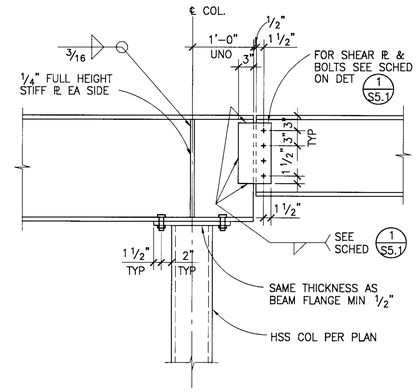

BEAM SPLICE AT ROOF 1"=1'-0" 1

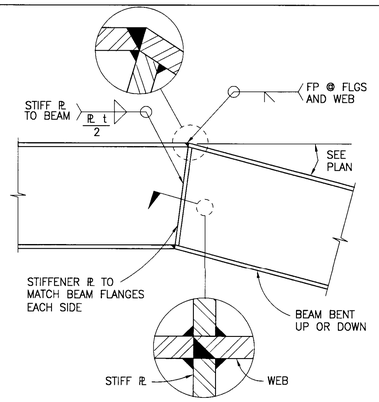

BENT BEAM DETAIL 1"=1'-0" 2

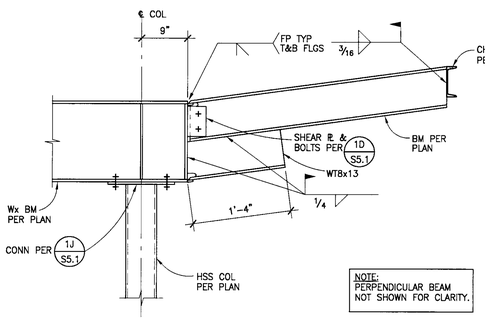

FRAMING AT ROOF OVERHANG 1"=1'-0" 15

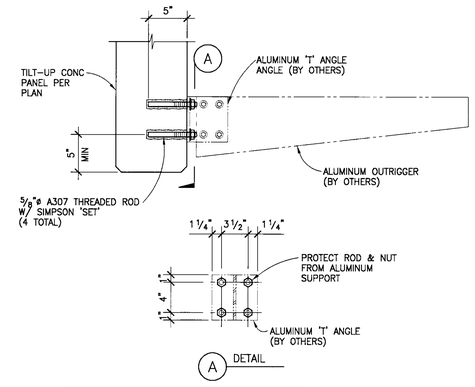

SUN SCREEN OUTRIGGER ANCHORAGE DETAIL 1 1/2"=1'-0" 11

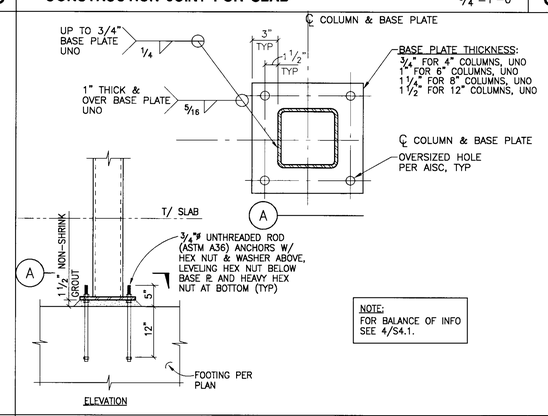

TYPICAL BASE PLATE DETAILS NTS 7

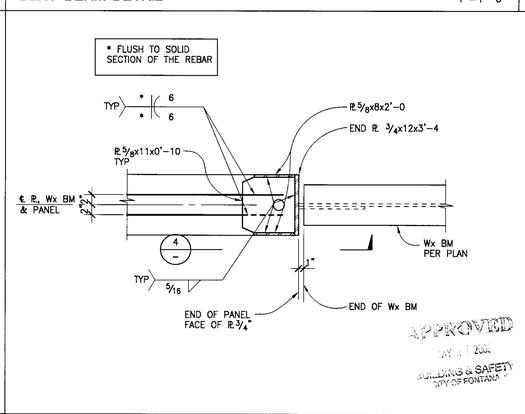

W BEAM PARALLEL TO PANEL CONNECTION 1"=1'-0" 3

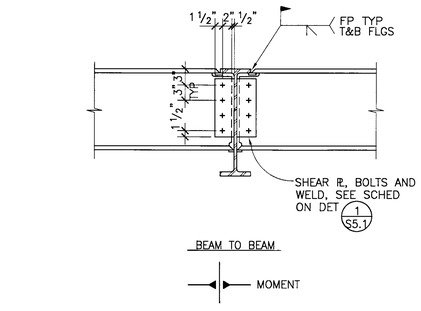

BM TO BM MOMENT CONN 1"=1'-0" 16

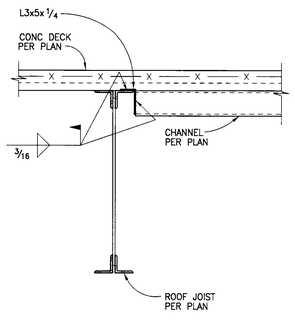

ROOF OPENING FRAMING 1"=1'-0" 12

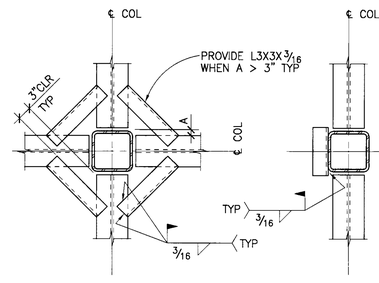

NOTE: DECK SUPPLIER SHALL PROVIDE REQUIRED DECK SUPPORTS AND CLOSURES AROUND COLUMN.

METAL DECK SUPPORT AT COLUMN 1"=1'-0" 8

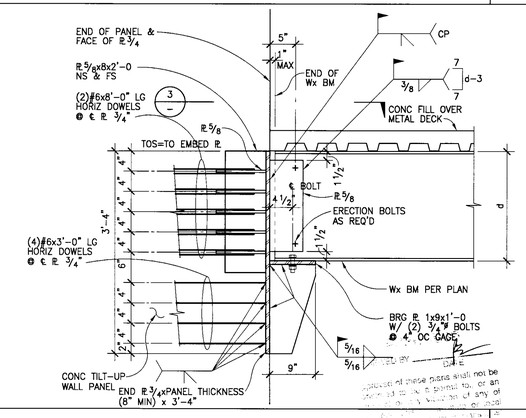

W BEAM PARALLEL TO PANEL CONNECTION 1"=1'-0" 4

LANGDON WILSON
ARCHITECTURE
PLANNING
INTERIORS

18800 VON KARMAN AVENUE, SUITE 200
IRVINE, CALIFORNIA 92612-1517
949 · 833 · 9193

STRUCTURAL
KPFF 949 · 252 · 1022
MECHANICAL
TKSC 949 · 756 · 0565
ELECTRICAL
CLP 714 · 751 · 1851
LANDSCAPE
FRANK RADMACHER 714 · 832 · 1774
CIVIL ENGINEER
IKE CONSULTING 714 · 241 · 0606
AUDIO / VISUAL
VENEKLASEN ASSOCIATES 310 · 450 · 1733
DATA TELEPHONE
PLANNET CONSULTING 714 · 982 · 5800

CITY OF FONTANA
DEVELOPMENT SERVICES
ORGANIZATION BUILDING

8353 SIERRA AVENUE FONTANA, CALIFORNIA

REV.	DATE	ISSUED FOR	REV.	DATE	ISSUED FOR
	12-5-05	PLAN CHECK			
	02-06-06	PC RESUBMIT.			
	03-10-06	2ND PC RESUBMIT.			
	04-17-06	PERMIT SET			
	04-17-06	BID SET			

Stamp

REGISTERED PROFESSIONAL ENGINEER JAMES E. FOSTER No. 4306 Exp. 12/31/07 STRUCTURAL STATE OF CALIFORNIA

DATE: 03/27/06 SCALE: AS NOTED
DRAWN BY: FS
JOB NO. L454-000 CADD TITLE: S5.3

SHEET TITLE
TYPICAL STEEL DETAILS

SHEET NUMBER:
S5.3

©Copyright 2005 Langdon Wilson

PERMIT SET / BID SET 04-17-06

JOB # 14-0312 FILE PATH & NAME L:\PROJECTS\2004\14-0312\S5-3.DWG FILED DATE & TIME MAR. 14, 2006 8:04:57 PM PLOTTED: ---- PLOT: 1=1 PROJ. MGR. FS DRAWN: LR
JOB NAME FONTANA
REF'S 14031?B.

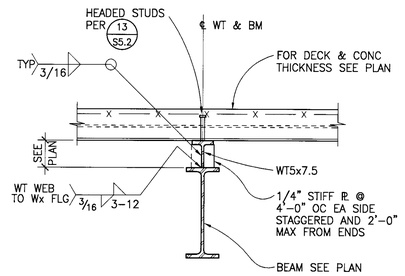

LOWERED BEAM DETAIL WITH WT 1"=1'-0" 13

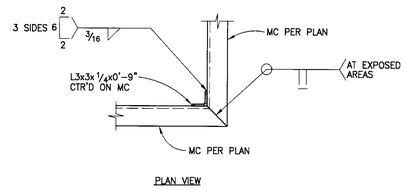

ENTRY CANOPY CORNER DETAIL 1"=1'-0" 9

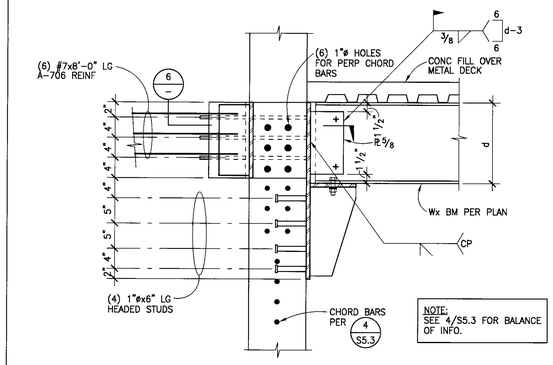

W BEAM TO PANEL CONNECTION 1"=1'-0" 5

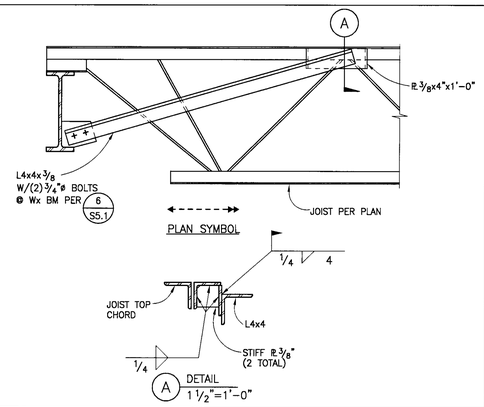

LATERAL BRACE AT JOISTS 1"=1'-0" 1

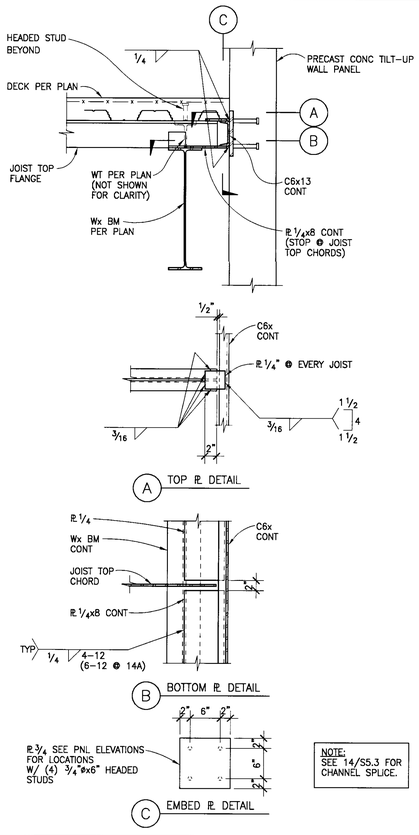

NOTE: SEE 14/S5.3 FOR CHANNEL SPLICE.

EMBED PLATE AT GRID LINES J AND E 1"=1'-0" 14 14A

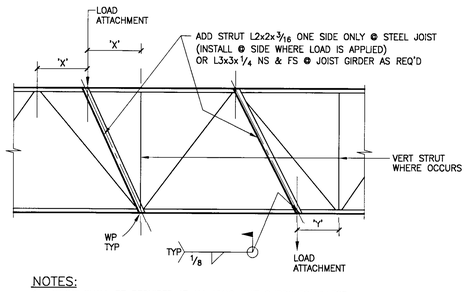

NOTES:
1. STRUT SHALL BE REQUIRED AT ALL HVAC UNIT SUPPORTS UNLESS SUPPORT IS AT PANEL POINT OF JOIST OR JST GIRDER.
2. STRUT IS NOT REQUIRED IF 'X' OR 'Y' IS LESS THAN OR EQUAL TO 6".

TYPICAL JOIST LOAD STRUT DETAIL NTS 10

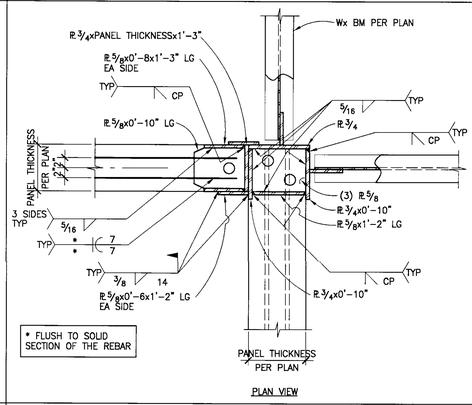

W BEAM TO PANEL CONNECTION 1"=1'-0" 6

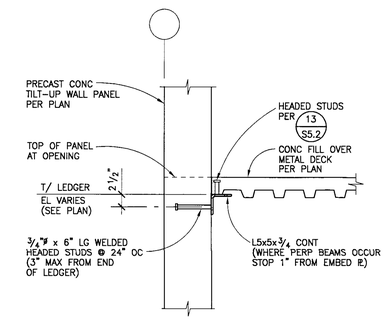

METAL DECK TO CONCRETE PANEL 1"=1'-0" 2

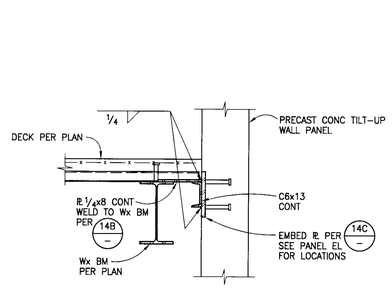

NOTE: SEE 14/S5.3 FOR CHANNEL SPLICE.

EMBED PLATE AT GRID LINES 9 AND 1 1"=1'-0" 11

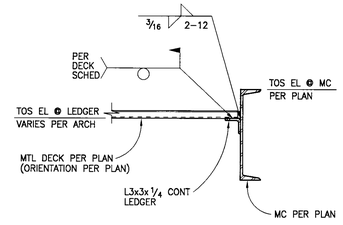

ENTRY CANOPY LEDGER DETAIL 1"=1'-0" 7

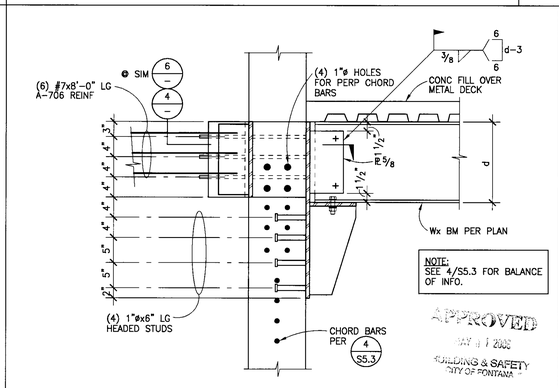

W BEAM TO PANEL CONNECTION 1"=1'-0" 3

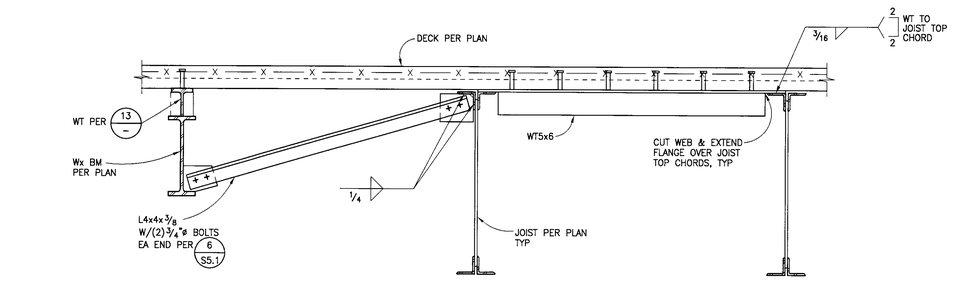

LATERAL BRACE AT BEAM PARALLEL TO JOIST 1"=1'-0" 12

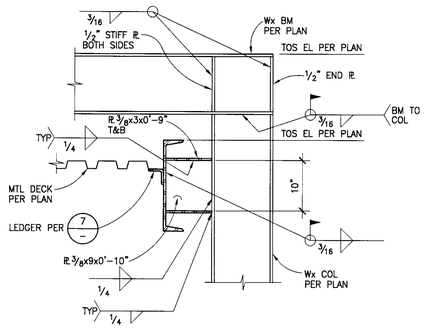

ENTRY CANOPY BEAM TO COLUMN DETAIL 1"=1'-0" 8

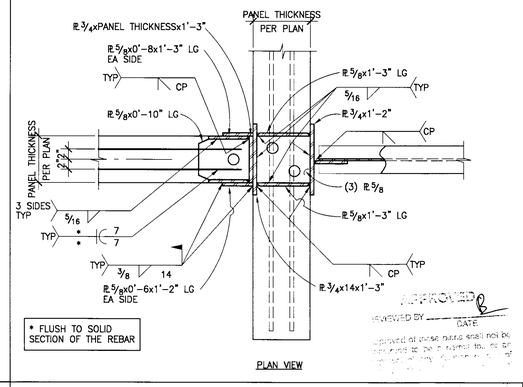

W BEAM TO PANEL CONNECTION 1"=1'-0" 4

LANGDON WILSON
ARCHITECTURE
PLANNING
INTERIORS

18800 VON KARMAN AVENUE, SUITE 200
IRVINE, CALIFORNIA 92612-1517
949 · 833 · 9193

STRUCTURAL
KPFF 949 · 252 · 1022
MECHANICAL
TKSC 949 · 756 · 0565
ELECTRICAL
CLP 714 · 751 · 1851
LANDSCAPE
FRANK RADMACHER 714 · 832 · 1774
CIVIL ENGINEER
IKE CONSULTING 714 · 241 · 0606
AUDIO / VISUAL
VENEKLASEN ASSOCIATES 310 · 450 · 1733
DATA TELEPHONE
PLANNET CONSULTING 714 · 982 · 5800

CITY OF FONTANA
DEVELOPMENT SERVICES ORGANIZATION BUILDING

8353 SIERRA AVENUE FONTANA, CALIFORNIA

REV.	DATE	ISSUED FOR	REV.	DATE	ISSUED FOR
	12-5-05	PLAN CHECK			
	02-06-06	PC RESUBMIT.			
	03-10-06	2ND PC RESUBMIT.			
	04-17-06	PERMIT SET			
	04-17-06	BID SET			

Stamp

REGISTERED PROFESSIONAL ENGINEER ROBERT LEE FRANCIS No. 14056 Exp. 12/31/07 STRUCTURAL STATE OF CALIFORNIA

DATE: 03/27/06 SCALE: AS NOTED
DRAWN BY: FS
JOB NO. L454-000 CADD TITLE: S5.4

SHEET TITLE:
STEEL DETAILS

SHEET NUMBER:
S5.4

©Copyright 2005 Langdon Wilson

PERMIT SET / BID SET 04-17-06

JOB # 14-0312
XREFS: *403128,
JOB NAME: FONTANA
FILE: PATH & NAME: I:\PROJECTS\2004\14-0312\S5-4.DWG
PLOTTED: DATE & TIME: FEB 03, 2006 11:40:24 AM
ROTATED: (PRO) 1=1 --- (LE) BF (NOCAL) 11 (TER)

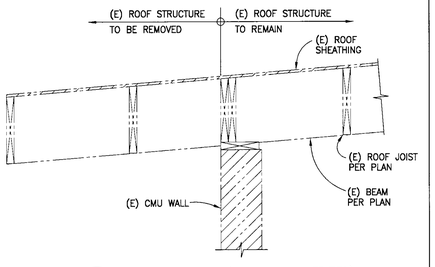

A EXISTING CONDITION (TO BE FIELD VERIFIED)

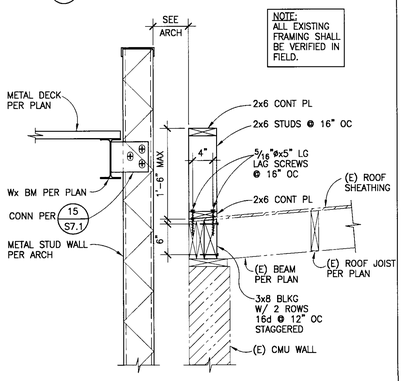

B NEW CONDITION

SECTION AT EXISTING BUILDING 1"=1'-0" **12**

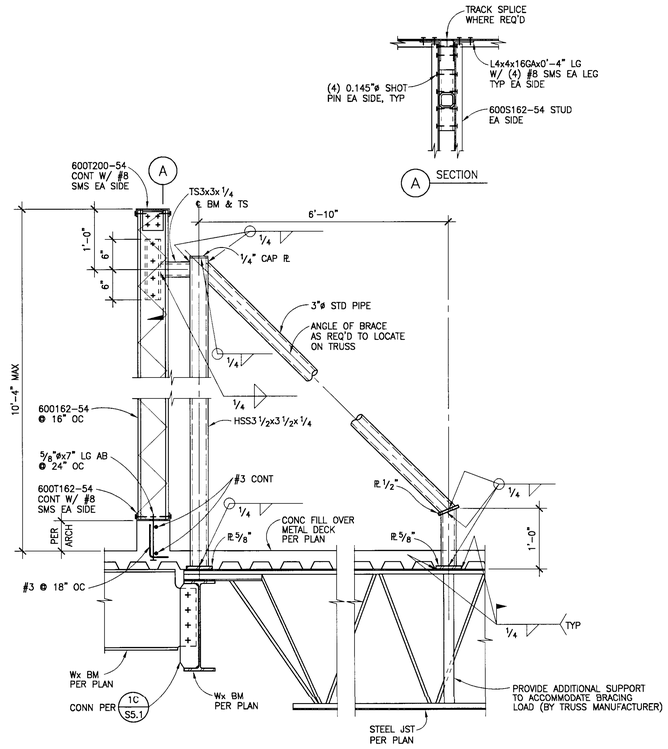

SCREEN WALL SUPPORT DETAIL 1"=1'-0" **8**

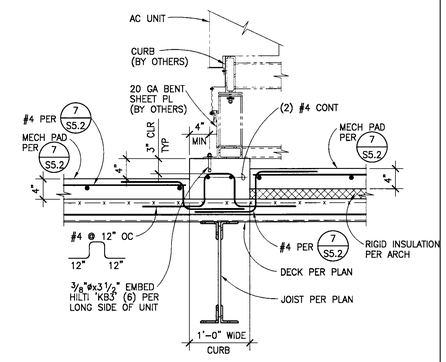

CURB AT AC/1 AND AC/2 UNITS 1"=1'-0" **5**

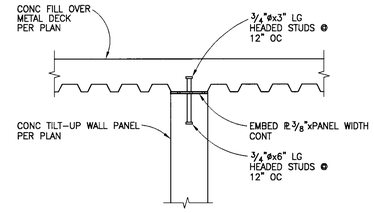

DECK OVER INTERIOR PANEL DETAIL 1"=1'-0" **1**

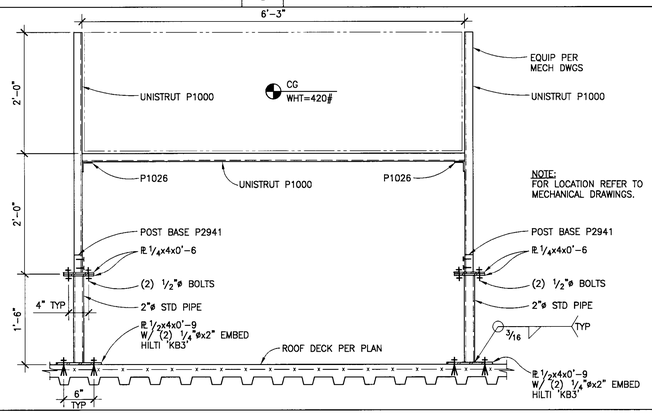

SOUND TRAP ANCHORAGE DETAIL 1"=1'-0" **2**

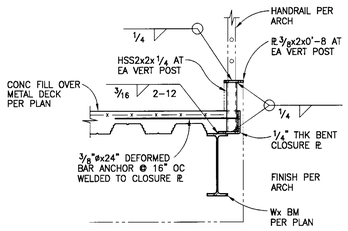

1"=1'-0"

HANDRAIL SUPPORT DETAIL AT 2ND FLOOR **10**

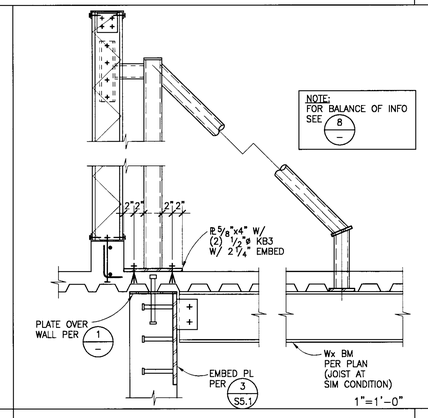

1"=1'-0"

SCREEN WALL SUPPORT DETAIL AT CONC WALL **9**

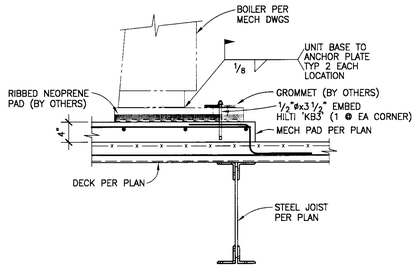

BOILER ANCHORAGE DETAIL 1"=1'-0" **6**

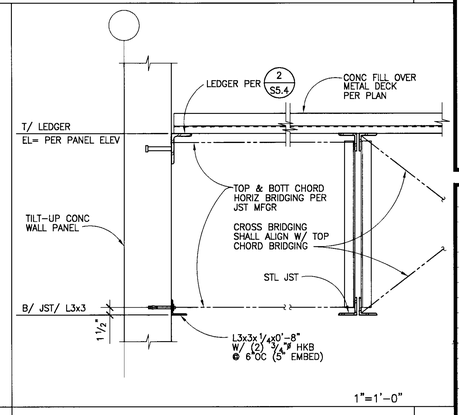

1"=1'-0"

STEEL JOIST PARALLEL TO CONCRETE PANEL **3**

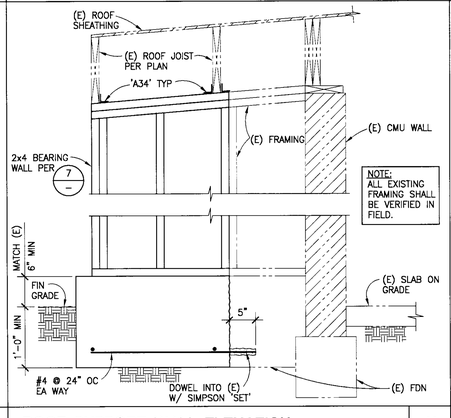

ROOF SUPPORT WALL ELEVATION 1"=1'-0" **11**

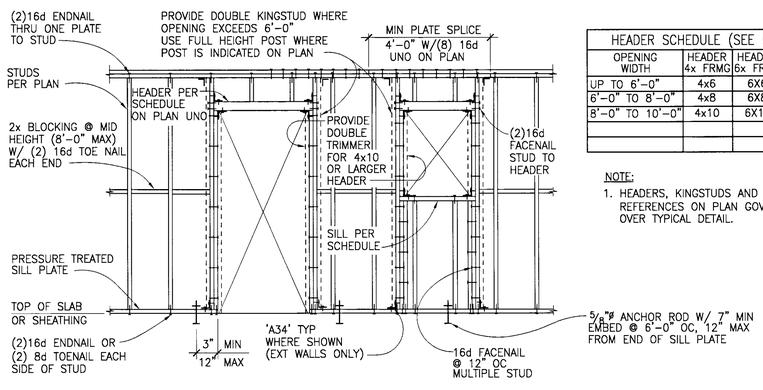

HEADER SCHEDULE (SEE NOTE 1)			
OPENING WIDTH	HEADER 4x FRMG	HEADER 6x FRMG	SILL WHERE OCCURS
UP TO 6'-0"	4x6	6X6	2x
6'-0" TO 8'-0"	4x8	6X8	(2) 2x
8'-0" TO 10'-0"	4x10	6X10	(3) 2x

NOTE:
1. HEADERS, KINGSTUDS AND OTHER REFERENCES ON PLAN GOVERN OVER TYPICAL DETAIL.

EXTERIOR AND INTERIOR BEARING WALL FRAMING 1"=1'-0" **7**

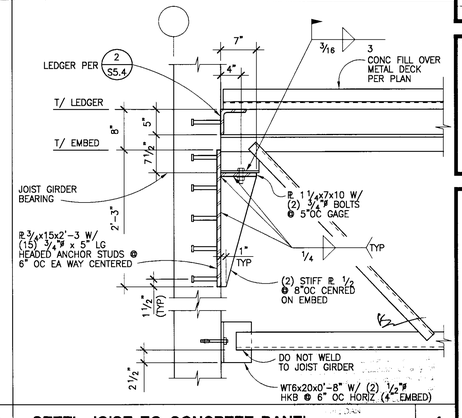

STEEL JOIST TO CONCRETE PANEL 1"=1'-0" **4**

LANGDON WILSON
ARCHITECTURE
PLANNING
INTERIORS

18800 VON KARMAN AVENUE, SUITE 200
IRVINE, CALIFORNIA 92612-1517
949 - 833 - 9193

STRUCTURAL
KPFF 949 - 252 - 1022
MECHANICAL
TKSC 949 - 756 - 0565
ELECTRICAL
CLP 714 - 751 - 1851
LANDSCAPE
FRANK RADMACHER 714 - 832 - 1774
CIVIL ENGINEER
IKE CONSULTING 714 - 241 - 0606
AUDIO / VISUAL
VENEKLASEN ASSOCIATES 310 - 450 - 1733
DATA TELEPHONE
PLANNET CONSULTING 714 - 982 - 5800

CITY OF FONTANA
DEVELOPMENT SERVICES
ORGANIZATION BUILDING
8353 SIERRA AVENUE FONTANA, CALIFORNIA

REV.	DATE	ISSUED FOR	REV.	DATE	ISSUED FOR
	12-5-05	PLAN CHECK			
	02-06-06	PC RESUBMIT.			
	03-10-06	2ND PC RESUBMIT.			
	04-17-06	PERMIT SET			
	04-17-06	BID SET			

APPROVED
APR 17 2006
PLANNING & SAFETY
CITY OF FONTANA

Stamp

REGISTERED PROFESSIONAL ENGINEER ROBERT JAMES FEST No. 4006 Exp. 12/31/07 STRUCTURAL STATE OF CALIFORNIA

DATE: 03/27/06 SCALE: AS NOTED
DRAWN BY: FS
JOB NO. L454-000 CADD TITLE: S5.5

SHEET TITLE:
STEEL & MISCELLANEOUS DETAILS

SHEET NUMBER:
S5.5

©Copyright 2005 Langdon Wilson

PERMIT SET / BID SET 04-17-06

PLOTTED DATE & TIME FEB 03, 2006 11:42:17 AM | PLOTTED BY | PLOT SCALE | PROGRAM | DRAFTER
FILE PATH & NAME L:\PROJECTS\2004\14-0312\S5-5.DWG
JOB NAME FONTANA
JOB # 14-0312
XREFS 14031?TB

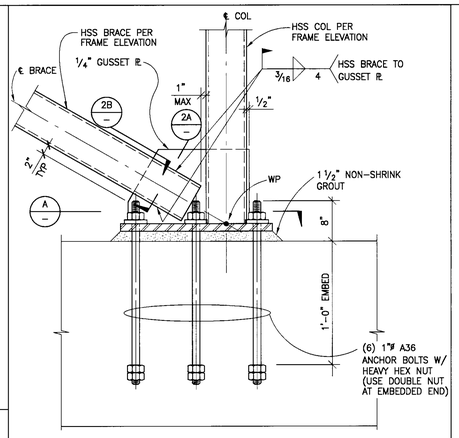

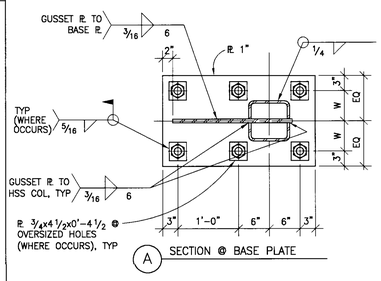

NOTES:
1. ALL CONNECTION PLATES TO BE ASTM A36.
2. SLOT CENTER OF TUBE AS REQUIRED – DO NOT OVERCUT TUBE BY MORE THAN 1".
3. W = WIDTH OF HSS COL

BRACED FRAME BASE PLATE DETAIL NTS **4**

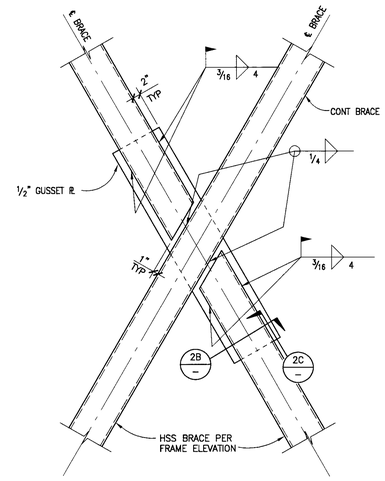

NOTES:
1. ALL CONNECTION PLATES TO BE ASTM A36.
2. SLOT CENTER OF TUBE AS REQUIRED – DO NOT OVERCUT TUBE BY MORE THAN 1".

NTS

BRACE FRAME CONNECTION AT BRACE INTERSECTION **3**

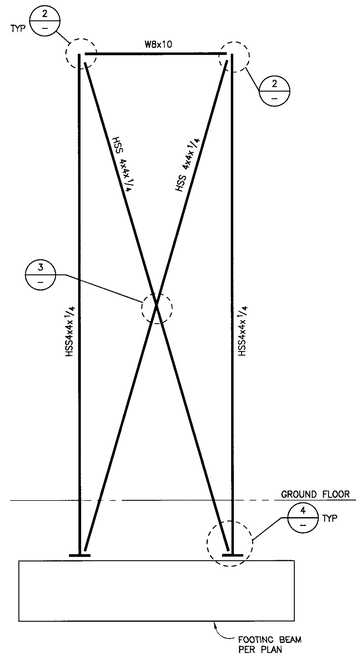

BRACE FRAME ELEVATION 1/2"=1'-0" **1**

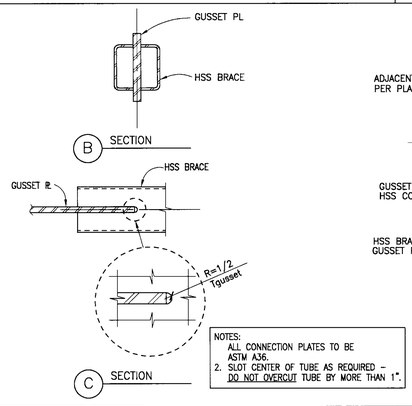

NOTES:
ALL CONNECTION PLATES TO BE ASTM A36.
2. SLOT CENTER OF TUBE AS REQUIRED – DO NOT OVERCUT TUBE BY MORE THAN 1".

BRACE FRAME CONNECTION 1 1/2"=1'-0" **2**

LANGDON WILSON
ARCHITECTURE
PLANNING
INTERIORS

18800 VON KARMAN AVENUE, SUITE 200
IRVINE, CALIFORNIA 92612-1517
949 - 833 - 9193

STRUCTURAL
KPFF 949 - 252 - 1022
MECHANICAL
TKSC 949 - 756 - 0565
ELECTRICAL
GLP 714 - 751 - 1851
LANDSCAPE
FRANK RADMACHER 714 - 832 - 1774
CIVIL ENGINEER
IKE CONSULTING 714 - 241 - 0606
AUDIO / VISUAL
VENEKLASEN ASSOCIATES 310 - 450 - 1733
DATA TELEPHONE
PLANNET CONSULTING 714 - 982 - 5800

CITY OF FONTANA
DEVELOPMENT SERVICES
ORGANIZATION BUILDING
8353 SIERRA AVENUE FONTANA, CALIFORNIA

REV.	DATE	ISSUED FOR	REV.	DATE	ISSUED FOR
	12-5-05	PLAN CHECK			
	02-06-06	PC RESUBMIT.			
	03-10-06	2ND PC RESUBMIT.			
	04-17-06	PERMIT SET			
	04-17-06	BID SET			

APPROVED
BUILDING & SAFETY

Stamp

REGISTERED PROFESSIONAL ENGINEER JAMES FEDERICI No. 4306 Exp. 12/31/07 STRUCTURAL STATE OF CALIFORNIA

DATE: 03/27/06 SCALE: AS NOTED
DRAWN BY: FS
JOB NO. L454-000 CADD TITLE: S5.6

SHEET TITLE:
STEEL BRACED FRAME ELEVATIONS & DETAILS

SHEET NUMBER:
S5.6

©Copyright 2005 Langdon Wilson

PERMIT SET / BID SET 04-17-06

JOB # 14-0312 NAME: FONTANA
WEFS 14.0312B.
PLOT DATE: FEB. 03, 2006 11:42:55 AM
L:\PROJECTS\2004\14-0312\S5-6.DWG

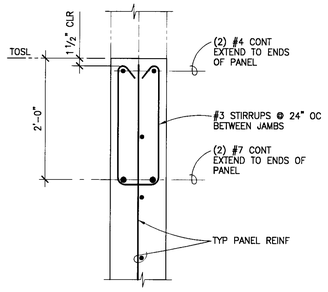

A BEAM SECTION

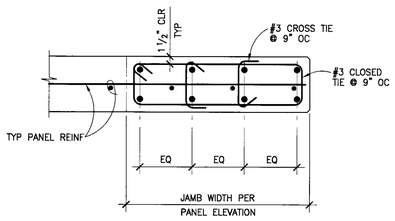

B COLUMN SECTION

FRAMING WITHIN PANELS 1"=1'-0" | 12

NOT USED | 8

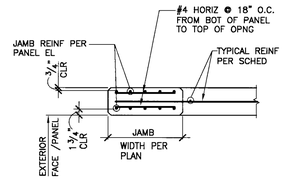

TYPICAL JAMB REINFORCEMENT @ OPENINGS

TILT-UP WALL PANEL SCHEDULE			
PANEL MARK	THICKNESS	VERTICAL REINFORCEMENT	HORIZONTAL REINFORCEMENT
P-1 THRU P-5 P-7 P-12	9 1/4"	#5 @ 14" OC	#5 @ 14" OC
P-6 P-8 P-9 P-10 P-11	9 1/4"	#5 @ 12" OC	#5 @ 12" OC
P-13	11 1/4"	#5 @ 20" OC EF STAGGERED	#5 @ 20" OC EF STAGGERED

TYPICAL TILT-UP PANEL REINF SCHEDULE

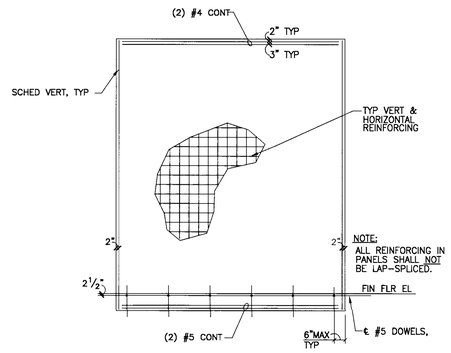

TYPICAL TILT-UP PANEL REINFORCEMENT ELEVATION

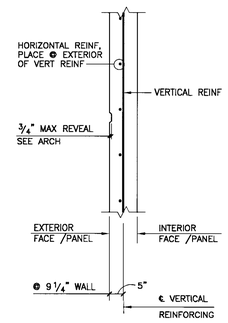

SINGLE CURTAIN

TYPICAL PANEL REINFORCEMENT SECTION

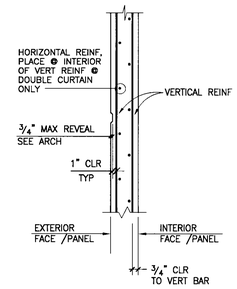

DOUBLE CURTAIN

TYPICAL PANEL REINFORCEMENT SECTION

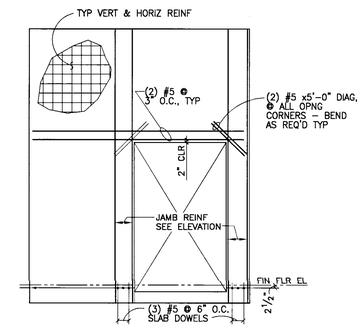

TYPICAL PANEL OPENING REINFORCEMENT ELEV

TYPICAL PANEL REINFORCING DETAIL NTS | 1

NOT USED | 10

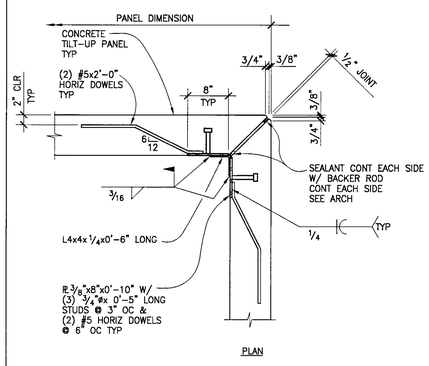

CORNER TIE FOR MITER JOINT PANELS 1"=1'-0" | 6

EMBED DETAIL 1"=1'-0" | 4

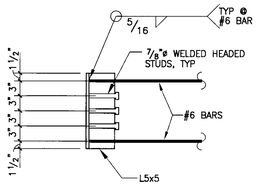

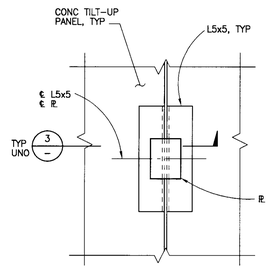

1"=1'-0"

TYPICAL PANEL-TO-PANEL CONNECTION ELEVATION | 2

NOT USED | 11

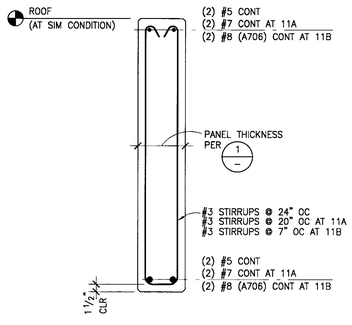

CONCRETE LINTEL SECTION 1"=1'-0" | 11B | 11A

CORNER TIE FOR BUTT JOINT PANELS 1"=1'-0" | 7

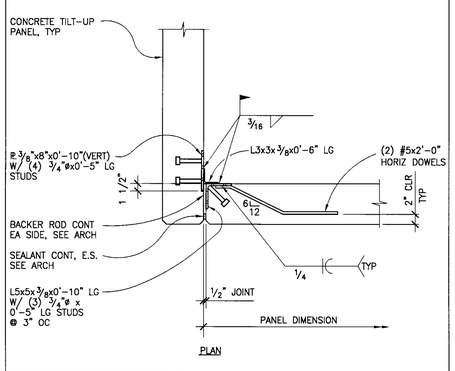

NOT USED | 5

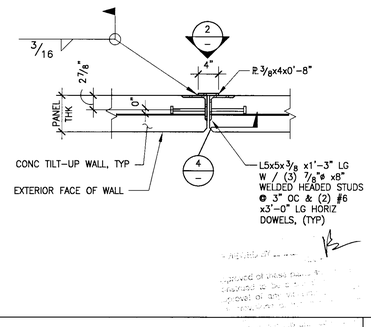

PANEL-TO-PANEL FLUSH SECTION 1"=1'-0" | 3

LANGDON WILSON
ARCHITECTURE
PLANNING
INTERIORS

18800 VON KARMAN AVENUE, SUITE 200
IRVINE, CALIFORNIA 92612-1517
949 - 833 - 9193

STRUCTURAL
KPFF 949 - 252 - 1022
MECHANICAL
TKSC 949 - 756 - 0565
ELECTRICAL
GLP 714 - 751 - 1851
LANDSCAPE
FRANK RADMACHER 714 - 832 - 1774
CIVIL ENGINEER
IKE CONSULTING 714 - 241 - 0606
AUDIO / VISUAL
VENEKLASEN ASSOCIATES 310 - 450 - 1733
DATA TELEPHONE
PLANNET CONSULTING 714 - 982 - 5800

CITY OF FONTANA
DEVELOPMENT SERVICES
ORGANIZATION BUILDING
8353 SIERRA AVENUE FONTANA, CALIFORNIA

REV.	DATE	ISSUED FOR	REV.	DATE	ISSUED FOR
	12-5-05	PLAN CHECK			
	02-06-06	PC RESUBMIT.			
	03-10-06	2ND PC RESUBMIT.			
	04-17-06	PERMIT SET			
	04-17-06	BID SET			

Stamp

REGISTERED PROFESSIONAL ENGINEER JAMES FERGUSON No. 1308 Exp. 12/31/07 STRUCTURAL STATE OF CALIFORNIA

DATE: 03/27/06 SCALE: AS NOTED
DRAWN BY: FS
JOB NO. L454-000 CADD TITLE: S6.1

SHEET TITLE:
TYPICAL PRECAST TILT-UP PANEL DETAILS

SHEET NUMBER:
S6.1

©Copyright 2005 Langdon Wilson

PERMIT SET / BID SET 04-17-06

JOB # 14-0312 | PARTS: 14031218L | FONTANA | L:\PROJECTS\2004\14-0312\S6-1.DWG | FEB 03, 2006 11:43:56 AM

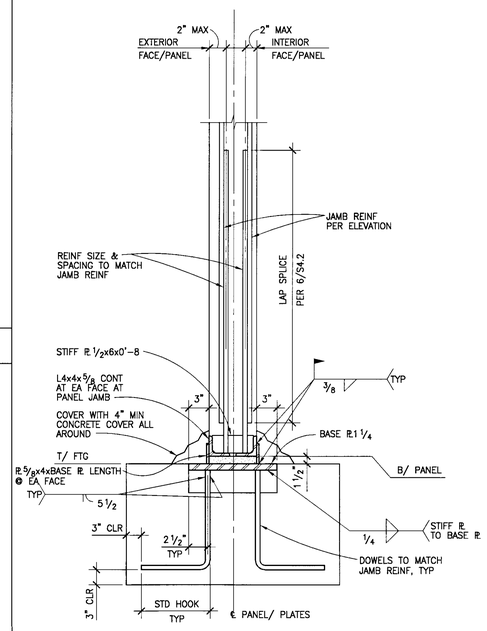

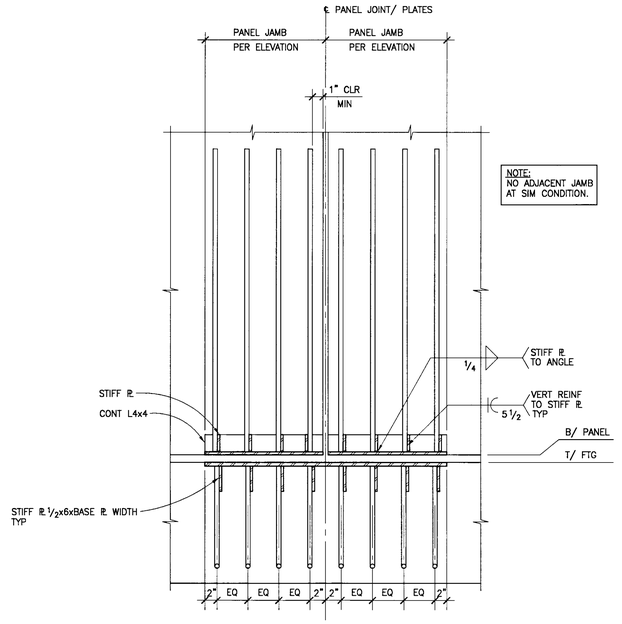

NOTE:
PROVIDE GROUT BETWEEN BOTTOM OF TILT-UP PANEL AND TOP OF FOOTING FOR FULL LENGTH OF FOOTING, TYP

PANEL HOLDOWN CONNECTION 1"=1'-0" 1

LANGDON WILSON
ARCHITECTURE
PLANNING
INTERIORS

18800 VON KARMAN AVENUE, SUITE 200
IRVINE, CALIFORNIA 92612-1517
949 · 833 · 9193

STRUCTURAL
KPFF 949 · 252 · 1022
MECHANICAL
TKSC 949 · 756 · 0565
ELECTRICAL
CLP 714 · 751 · 1851
LANDSCAPE
FRANK RADMACHER 714 · 832 · 1774
CIVIL ENGINEER
IKE CONSULTING 714 · 241 · 0606
AUDIO / VISUAL
VENEKLASEN ASSOCIATES 310 · 450 · 1733
DATA TELEPHONE
PLANNET CONSULTING 714 · 982 · 5800

CITY OF FONTANA
DEVELOPMENT SERVICES
ORGANIZATION BUILDING
8353 SIERRA AVENUE FONTANA, CALIFORNIA

REV.	DATE	ISSUED FOR	REV.	DATE	ISSUED FOR
	12-5-05	PLAN CHECK			
	02-06-06	PC RESUBMIT.			
	03-10-06	2ND PC RESUBMIT.			
	04-17-06	PERMIT SET			
	04-17-06	BID SET			

Stamp

REGISTERED PROFESSIONAL ENGINEER
JAMES FEE SMITH
No. S-4306
Exp. 12/31/07
STRUCTURAL
STATE OF CALIFORNIA

DATE: 03/27/06 SCALE: AS NOTED
DRAWN BY: FS
JOB NO. L454-000 CADD TITLE: S6.2

SHEET TITLE:
TYPICAL PRECAST
TILT-UP PANEL DETAILS

SHEET NUMBER:
S6.2

©Copyright 2005 Langdon Wilson

PERMIT SET / BID SET 04-17-06

JOB # 14-0312
NAME FONTANA
PATH & NAME L:\PROJECTS\2004\14-0312\S6-2.DWG
PLOTTED DATE & TIME FEB 03, 2006 11:44:44 AM
PLOTTED BY JD
SCALE 1=1
XREFS 14-0312TB,

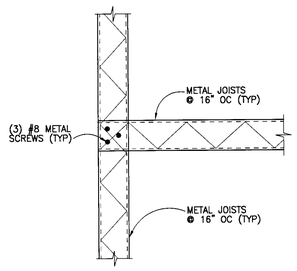

DETAIL 1"=1'-0" **13**

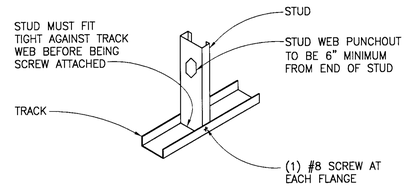

DETAIL NO SCALE **10**

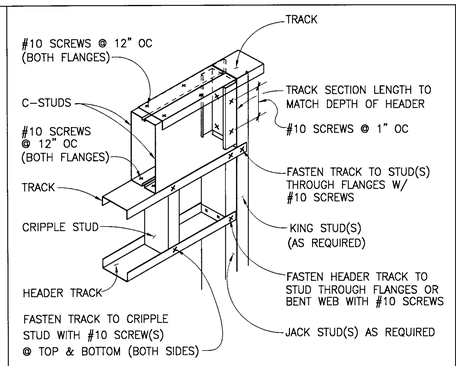

BOXED BEAM HEADER NO SCALE **6**

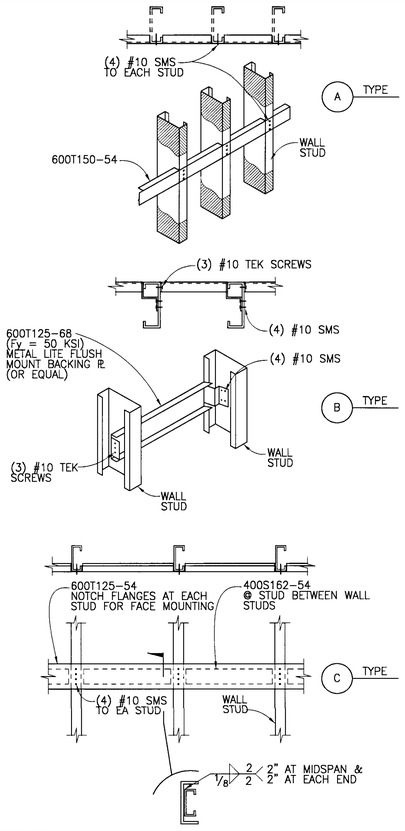

BACKING PLATES NO SCALE **4**

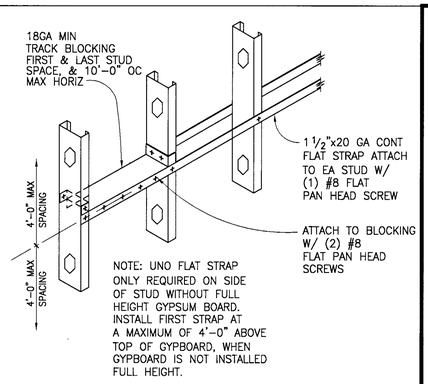

LATERAL BRACING FLAT STRAPS NO SCALE **1**

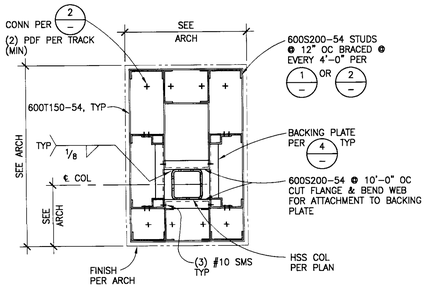

TYP COLUMN ENCLOSURE PLAN VIEW DETAIL 1"=1'-0" **14**

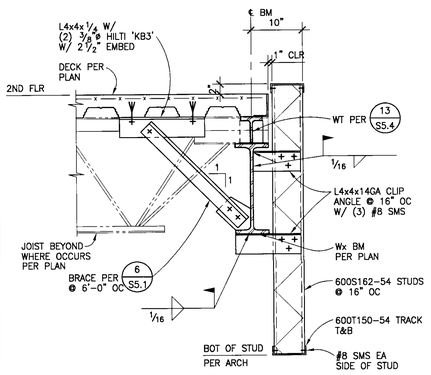

TYPICAL EXTERIOR WALL SECTION 1"=1'-0" **11**

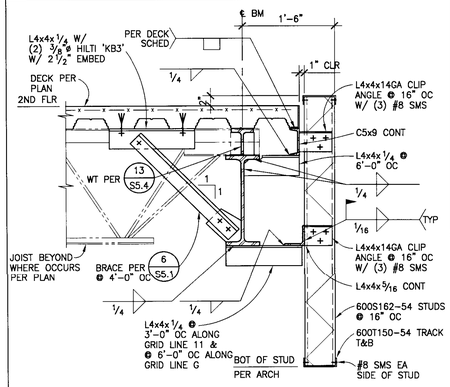

TYPICAL EXTERIOR WALL SECTION 1"=1'-0" **7**

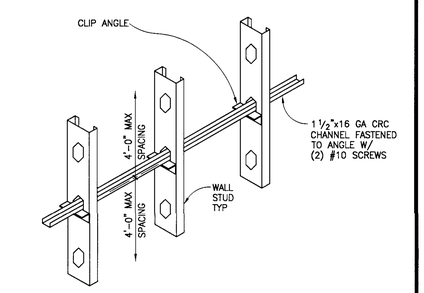

LATERAL BRACING COLD ROLLED CHANNEL NO SCALE **2**

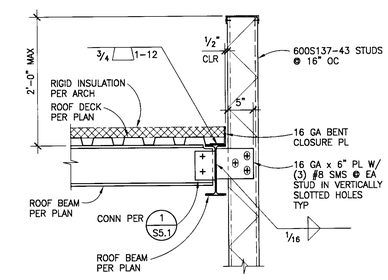

EXTERIOR WALL SECTION 1"=1'-0" **15**

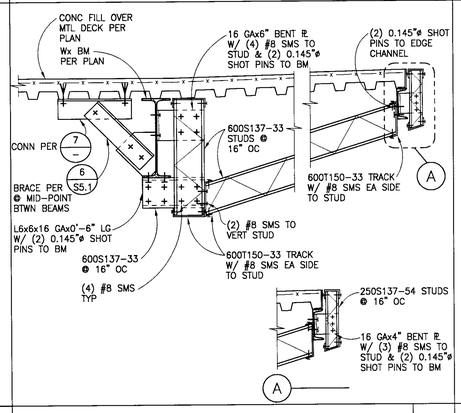

TYP STUD FRAMING AT ROOF OVERHANG 1"=1'-0" **12**

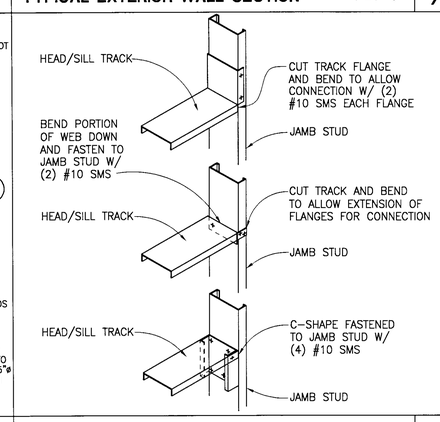

SILL AND HEAD TRACK CONNECTION NO SCALE **8**

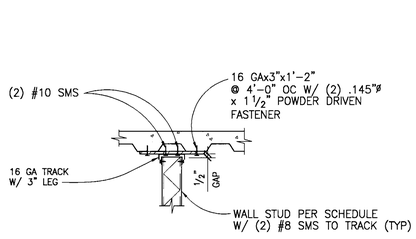

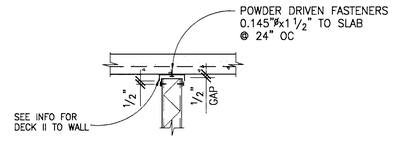

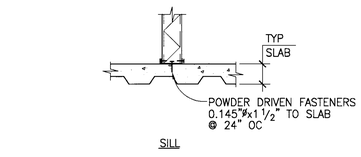

NO SCALE

TYPICAL NON-BEARING STUD WALL CONNECTIONS **5**

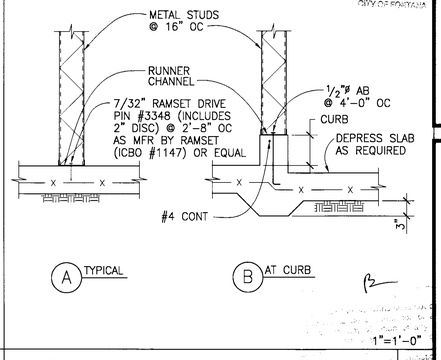

1"=1'-0"

TYPICAL NON-BEARING METAL STUD PARTITION **3**

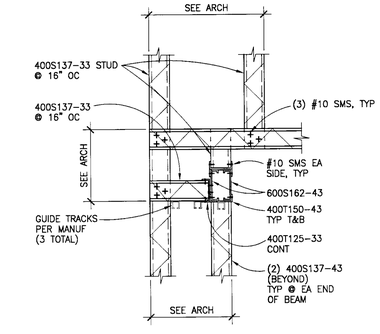

SECTION AT SLIDING DOOR (ROOM 125) 1"=1'-0" **16**

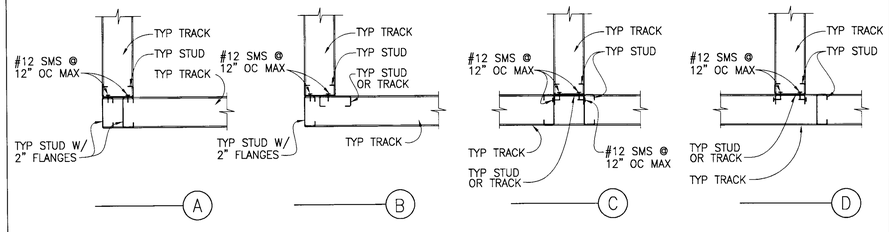

TYPICAL STUD INTERSECTION 1"=1'-0" **9**

LANGDON WILSON
ARCHITECTURE
PLANNING
INTERIORS

18800 VON KARMAN AVENUE, SUITE 200
IRVINE, CALIFORNIA 92612-1517
949 - 833 - 9193

STRUCTURAL
KPFF 949 - 252 - 1022
MECHANICAL
TKSC 949 - 756 - 0565
ELECTRICAL
CLP 714 - 751 - 1851
LANDSCAPE
FRANK RADMACHER 714 - 832 - 1774
CIVIL ENGINEER
IKE CONSULTING 714 - 241 - 0606
AUDIO / VISUAL
VENEKLASEN ASSOCIATES 310 - 450 - 1733
DATA TELEPHONE
PLANNET CONSULTING 714 - 982 - 5800

CITY OF FONTANA
DEVELOPMENT SERVICES
ORGANIZATION BUILDING
8353 SIERRA AVENUE FONTANA, CALIFORNIA

REV.	DATE	ISSUED FOR	REV.	DATE	ISSUED FOR
	12-5-05	PLAN CHECK			
	02-06-06	PC RESUBMIT.			
	03-10-06	2ND PC RESUBMIT.			
	04-17-06	PERMIT SET			
	04-17-06	BID SET			

APPROVED
MAY 1 2007
BUILDING & SAFETY
CITY OF FONTANA

Stamp

REGISTERED PROFESSIONAL ENGINEER ROBERT JAMES FOX No. L4306 Exp. 12/31/07 STRUCTURAL STATE OF CALIFORNIA

DATE: 03/27/06 SCALE: AS NOTED
DRAWN BY: FS
JOB NO. L454-000 CADD TITLE: S7.1

SHEET TITLE:
TYPICAL METAL STUD DETAILS

SHEET NUMBER:
S7.1

©Copyright 2005 Langdon Wilson

PERMIT SET / BID SET 04-17-06

PLOTTED BY: JAE & TIM: MAR 21, 2006 6:34:41 PM | PDF: LD B | PLOT SCALE: --- | PLOTTING: 1=1 | DRAWN BY: RF | CHECKED BY: TT
FILE PATH & NAME: L:\PROJECTS\2004\14-0312\S7-1.DWG
JOB NAME: FONTANA
JOB # 14-0312
SHEETS: *4037.TBL

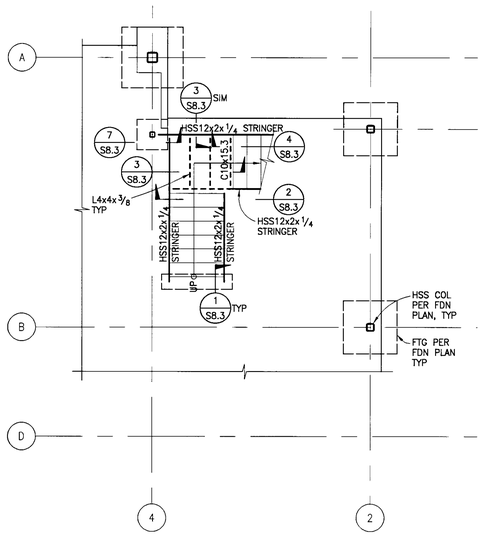

STAIR #2 PLAN AT FOUNDATION 3

1/4" = 1'-0"

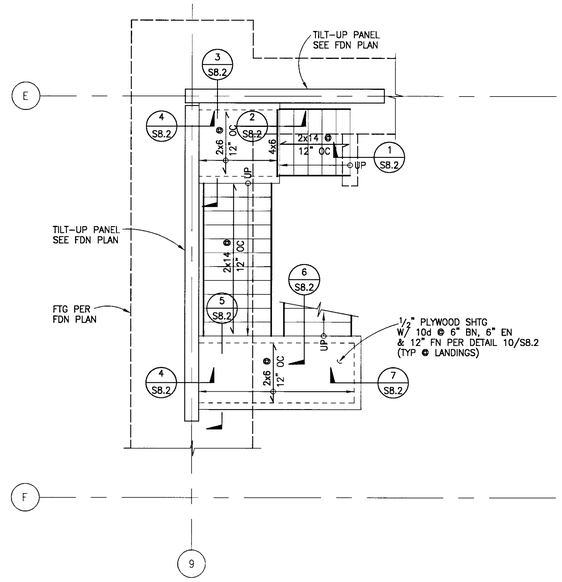

STAIR #1 PLAN AT FOUNDATION 1

1/4" = 1'-0"

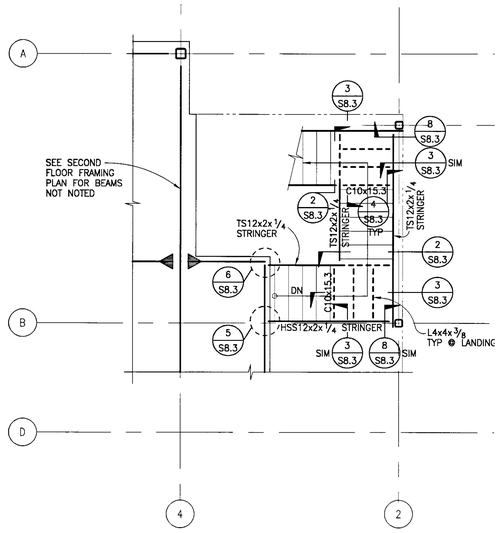

STAIR #2 PLAN AT SECOND FLOOR 4

1/4" = 1'-0"

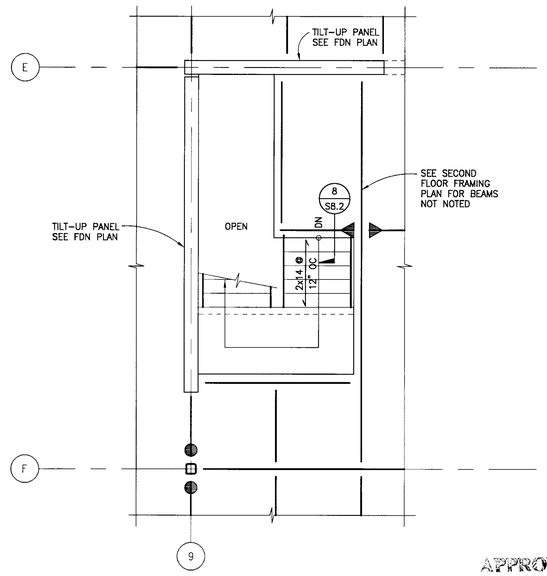

STAIR #1 PLAN AT SECOND FLOOR 2

1/4" = 1'-0"

APPROVED
MAY 1 1 2006
BUILDING & SAFETY
CITY OF FONTANA

LANGDON WILSON
ARCHITECTURE
PLANNING
INTERIORS

18800 VON KARMAN AVENUE, SUITE 200
IRVINE, CALIFORNIA 92612-1517
949 · 833 · 9193

STRUCTURAL
KPFF 949 · 252 · 1022
MECHANICAL
TKSC 949 · 756 · 0565
ELECTRICAL
GLP 714 · 751 · 1851
LANDSCAPE
FRANK RADMACHER 714 · 832 · 1774
CIVIL ENGINEER
IKE CONSULTING 714 · 241 · 0606
AUDIO / VISUAL
VENEKLASEN ASSOCIATES 310 · 450 · 1733
DATA TELEPHONE
PLANNET CONSULTING 714 · 982 · 5800

CITY OF FONTANA

DEVELOPMENT SERVICES
ORGANIZATION BUILDING

8353 SIERRA AVENUE FONTANA, CALIFORNIA

REV.	DATE	ISSUED FOR	REV.	DATE	ISSUED FOR
	12-5-05	PLAN CHECK			
	02-06-06	PC RESUBMIT.			
	03-10-06	2ND PC RESUBMIT.			
	04-17-06	PERMIT SET			
	04-17-06	BID SET			

Stamp

REGISTERED PROFESSIONAL ENGINEER ROBERT JAMES FEDORTA No. 4306 Exp. 12/31/07 STRUCTURAL STATE OF CALIFORNIA

DATE: 03/27/06 SCALE: AS NOTED
DRAWN BY: FS
JOB NO. L454-000 CADD TITLE: S8.1

SHEET TITLE:
STAIR FRAMING PLANS

SHEET NUMBER:
S8.1

© Copyright 2005 Langdon Wilson

PERMIT SET / BID SET 04-17-06

JOB # 14-0312 | DWG # FONTANA | FILE L:\PROJECTS\2004\14-0312\S8-1.DWG | PLT. DATE: WAR. 14, 2006 5:42:01 PM | XREFS: XLAB00, T4103T2TB.

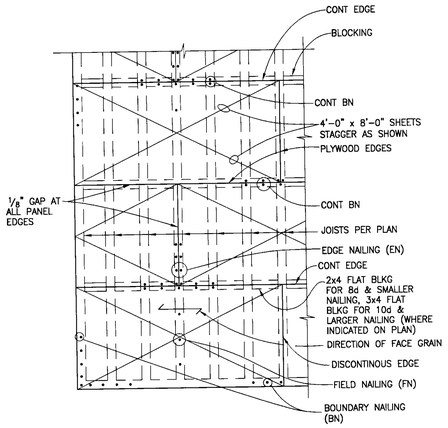

PLAN

NOTES:
1. ALL PLYWOOD SHALL BE DOUGLAS FIR WITH EXTERIOR GLUE
2. PLYWOOD PIECES SHALL CONTAIN NOT LESS THAN 8 SQUARE FEET NOR BE LESS THAN 2 FT WIDE
3. ALL PLYWOOD EDGES SHALL BE SUPPORTED W/ FRAMING OR BLOCKING.

TYPICAL SHEATHING NAILING 1"=1'-0" **10**

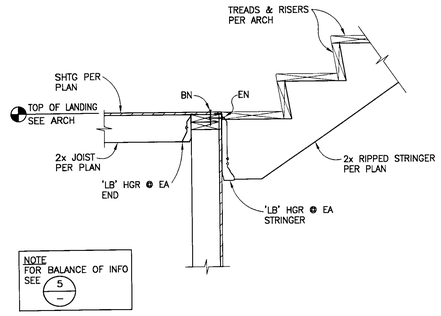

SECTION AT WOOD STAIR LANDING 1"=1'-0" **6**

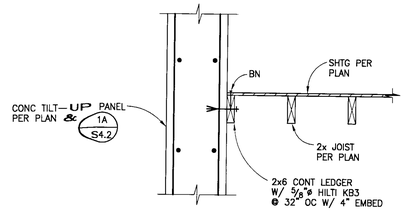

SECTION AT WOOD STAIR LANDING 1"=1'-0" **4**

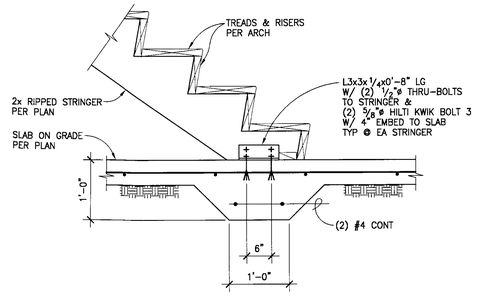

WOOD STAIR STRINGER CONN AT FOUNDATION 1"=1'-0" **1**

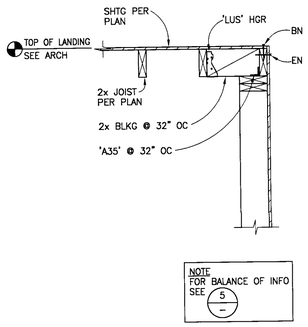

SECTION AT WOOD STAIR LANDING 1"=1'-0" **7**

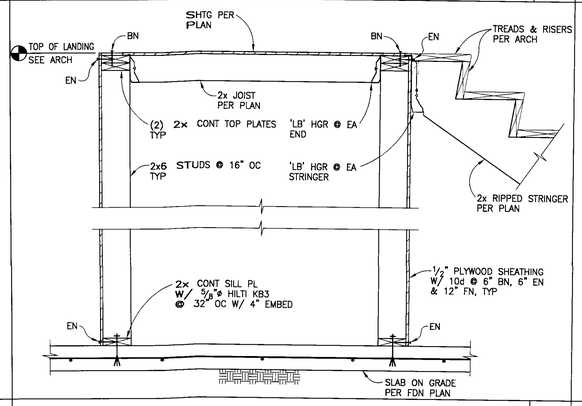

SECTION AT WOOD STAIR LANDING 1"=1'-0" **5**

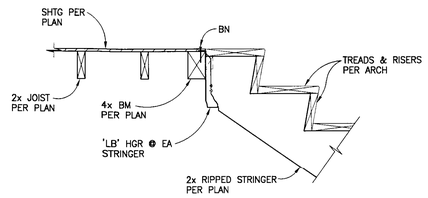

WOOD STAIR STRINGER CONN AT LANDING 1"=1'-0" **2**

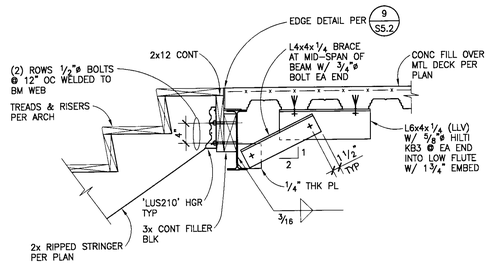

WOOD STAIR STRINGER CONN AT SECOND FLOOR 1"=1'-0" **8**

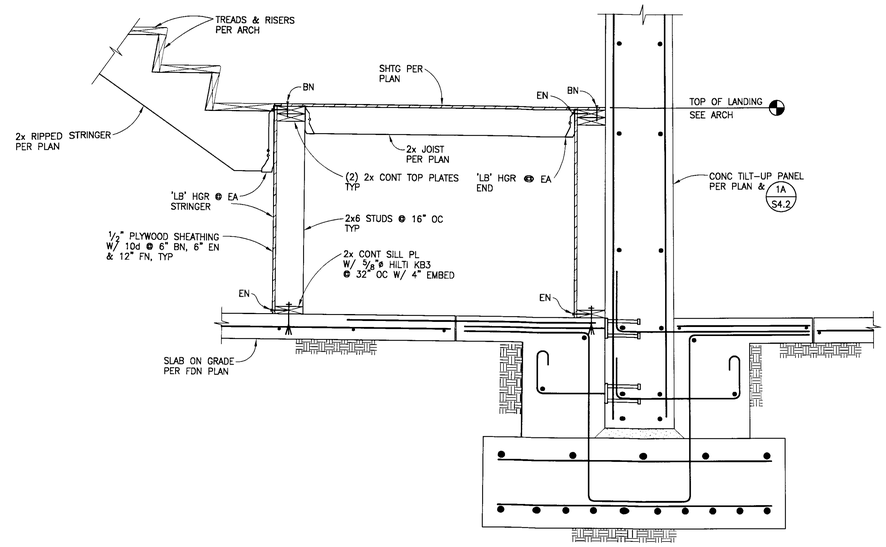

APPROVED
MAY 1 - 2006
BUILDING & SAFETY
CITY OF FONTANA

SECTION AT WOOD STAIR LANDING 1"=1'-0" **3**

NOT USED **9**

LANGDON WILSON
ARCHITECTURE
PLANNING
INTERIORS

18800 VON KARMAN AVENUE, SUITE 200
IRVINE, CALIFORNIA 92612-1517
949 · 833 · 9193

STRUCTURAL
KPFF 949 · 252 · 1022
MECHANICAL
TKSC 949 · 756 · 0565
ELECTRICAL
CLP 714 · 751 · 1851
LANDSCAPE
FRANK RADMACHER 714 · 832 · 1774
CIVIL ENGINEER
IKE CONSULTING 714 · 241 · 0606
AUDIO / VISUAL
VENEKLASEN ASSOCIATES 310 · 450 · 1733
DATA TELEPHONE
PLANNET CONSULTING 714 · 982 · 5800

CITY OF FONTANA
DEVELOPMENT SERVICES
ORGANIZATION BUILDING
8353 SIERRA AVENUE FONTANA, CALIFORNIA

REV.	DATE	ISSUED FOR	REV.	DATE	ISSUED FOR
	12-5-05	PLAN CHECK			
	02-06-06	PC RESUBMIT.			
	03-10-06	2ND PC RESUBMIT.			
	04-17-06	PERMIT SET			
	04-17-06	BID SET			

Stamp

DATE: 03/27/06 SCALE: AS NOTED
DRAWN BY: FS
JOB NO. L454-000 CADD TITLE: S8.2

SHEET TITLE:
STAIR DETAILS

SHEET NUMBER:
S8.2

©Copyright 2005 Langdon Wilson

PERMIT SET / BID SET 04-17-06

JOB # 15-0038 | JOB NAME FONTANA | FILE PATH & NAME L:\PROJECTS\2004\14-0072\S8-2.DWG | PLOT DATE & TIME MAR 14, 2006 5:42:32 PM | PLOT SCALE 1=1 | PLOT BY RF | DRAWN BY TT

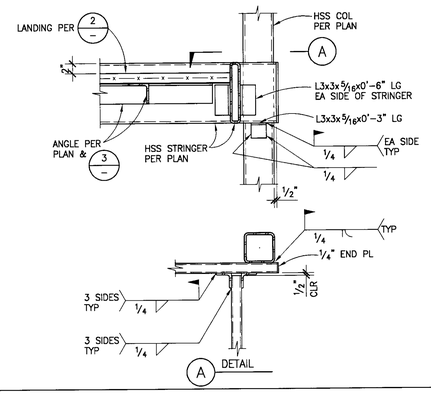

STAIR STRINGER TO COLUMN DETAIL 1"=1'-0" 8

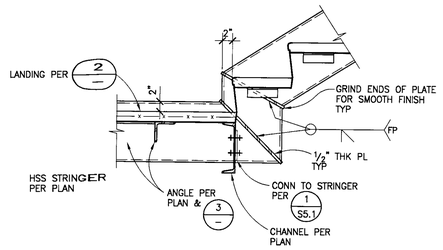

STAIR STRINGER DETAIL AT LANDING 1"=1'-0" 4

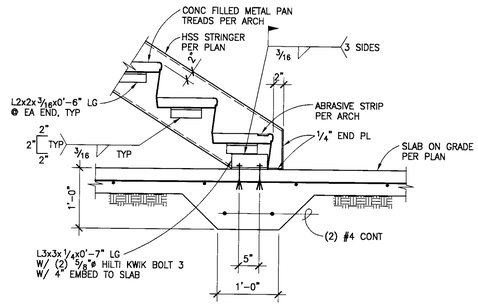

STAIR STRINGER CONN AT FOUNDATION 1"=1'-0" 1

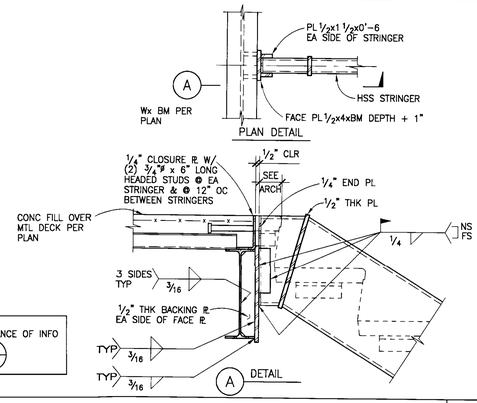

NOTE:
FOR BALANCE OF INFO SEE 2

STAIR STRINGER DETAIL AT FLOOR 1 1/2"=1'-0" 5

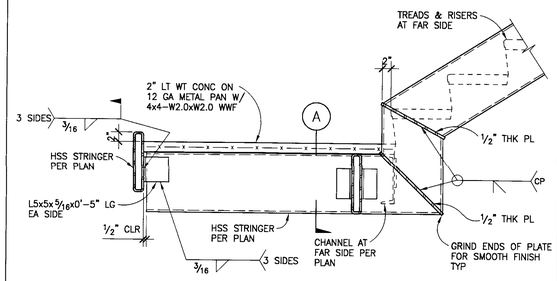

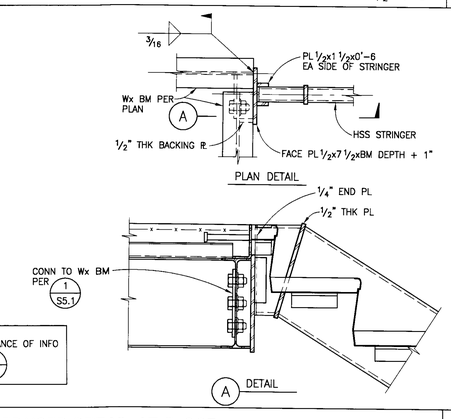

NOTE:
FOR BALANCE OF INFO SEE 5

STAIR STRINGER DETAIL AT FLOOR 1 1/2"=1'-0" 6

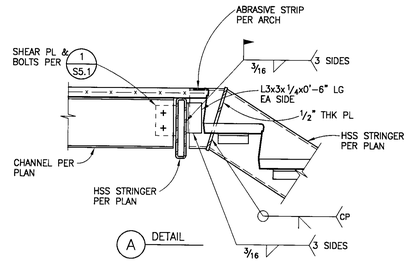

STAIR STRINGER DETAIL AT LANDING 1"=1'-0" 2

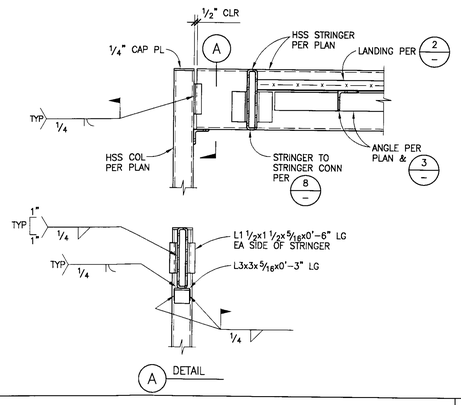

STAIR STRINGER TO COLUMN DETAIL 1"=1'-0" 7

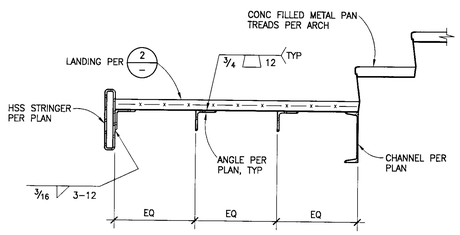

SECTION THRU LANDING 1"=1'-0" 3

APPROVED
MAY 1 1 2006
BUILDING & SAFETY
CITY OF FONTANA

LANGDON WILSON
ARCHITECTURE
PLANNING
INTERIORS

18800 VON KARMAN AVENUE, SUITE 200
IRVINE, CALIFORNIA 92612-1517
949 - 833 - 9193

STRUCTURAL
KPFF 949 - 252 - 1022
MECHANICAL
TKSC 949 - 756 - 0565
ELECTRICAL
CLP 714 - 751 - 1851
LANDSCAPE
FRANK RADMACHER 714 - 832 - 1774
CIVIL ENGINEER
IKE CONSULTING 714 - 241 - 0606
AUDIO / VISUAL
VENEKLASEN ASSOCIATES 310 - 450 - 1733
DATA TELEPHONE
PLANNET CONSULTING 714 - 982 - 5800

CITY OF FONTANA
DEVELOPMENT SERVICES
ORGANIZATION BUILDING
8353 SIERRA AVENUE FONTANA, CALIFORNIA

REV.	DATE	ISSUED FOR	REV.	DATE	ISSUED FOR
	12-5-05	PLAN CHECK			
	02-06-06	PC RESUBMIT.			
	03-10-06	2ND PC RESUBMIT.			
	04-17-06	PERMIT SET			
	04-17-06	BID SET			

Stamp

REGISTERED PROFESSIONAL ENGINEER
BRIAN JAMES FOCHTMAN
No. 4506
Exp. 12/31/07
STRUCTURAL
STATE OF CALIFORNIA

DATE: 03/27/06 SCALE: AS NOTED
DRAWN BY: FS
JOB NO. L454-000 CADD TITLE S8.2

SHEET TITLE:
STAIR DETAILS

SHEET NUMBER:
S8.3

©Copyright 2005 Langdon Wilson

PERMIT SET / BID SET 04-17-06

PLT: DATE & TIME: MAR. 14, 2006 5:43:42 PM | UPDATED UTIL: OT SCALE: 1=1 | PROGRAM: RF | SAVE LSR: TT
PT: & NAME: E:\PROJECTS\2004\14-0372\S8-3.DWG
J NAM: FONTANA
JOB #: 15-0038
XREFS: 14031?TB.

ROOFTOP PACKAGED V.A.V. UNITS

UNIT NO.	MANUFACTURER & MODEL NO.	NO. OF	SERVICE	SUPPLY FAN CFM	SUPPLY FAN TSP (IN.)	RET. / EXH. FAN CFM	RET. / EXH. FAN TSP (IN.)	AMB. TEMP. (°F.)	COOLING COIL CAPACITY(KBTU/HR) SENS.	CAPACITY TOTAL	EAT (°F) DB	EAT (°F) WB	LAT (°F) DB	LAT (°F) WB	FACE AREA (SQ. FT.)	ROWS / FPI	ELECTRICAL COMPRESSORS NO. OF	COMPRESSORS KW	COMPRESSORS RLA	COMPRESSORS LRA	CONDENSER FANS NO. OF	CONDENSER FANS HP	CONDENSER FANS FLA	SUPPLY FAN HP	RETURN FAN HP	MCA	MFS	VOLTAGE	EER	FILTERS (NO.) & SIZE	FILTERS EFF.	MIN. OSA (CFM)	OPER. WT. (LBS.)	REMARKS
AC-1	MC QUAY RDT 050	1	1ST FLOOR	15,000	4.0	13,100	1.0	110	474984	521621	79.2	62.2	50.5	49.6	39.5	4 / 10	4	59.8	22.0	158.0	59.8	1.0	2.0	20	5	267	300	208V/3PH/60HZ	9.5	(7) 16x20x2 (21) 16x25x2	30%	1,900	11,000	
AC-2	MC QUAY RDT 050	1	2ND FLOOR	15,000	4.0	13,100	1.0	110	483896	530420	79.2	62.2	49.8	49.3	39.5	5 / 10	4	59.8	22.0	158.0	59.8	1.0	2.0	20	5	267	300	208V/3PH/60HZ	9.6	(7) 16x20x2 (21) 16x25x2	30%	1,900	11,000	

HEATING HOT WATER BOILERS

UNIT NO.	MANUFACTURER & MODEL NO.	NO. OF	CAPACITY (KBTU / HR) INPUT	CAPACITY OUTPUT	HOT WATER EWT (°F)	HOT WATER LWT (°F)	EFF (%)	ELECTRICAL VOLTAGE	ELECTRICAL BLOWER HP	OPER. WT. (LBS.)	REMARKS
B-1	PARKER LT490 LR	1	490	412	160	190	84	120V/1PH/60HZ	1/3	1400	STACKLESS OUTDOOR INSTALLATION,

V.A.V. BOXES

UNIT NO. / BOX SIZE	MANUFACTURER & MODEL NO.	C.F.M. RANGE	INLET SIZE (DIA.) ①	DISCH. PLENUM LENGTH (FT.)	HEATING HOT WATER COIL (EXTERIOR ZONES) MODEL NO.	COIL SIZE (INCHES)	MIN. B.T.U.H. 2-ROW	RATED C.F.M.	RATED G.P.M.	PIPE SIZE	VALVE SIZE	REMARKS
6	INTERIOR ZONE TITUS	200–450	6	4	6R2	12 x 12-1/2	13200	200	1.0	1/2"	1/2"	INDICATED CAPACITY IS MINIMUM AND IS BASED ON 150°F. TEMP. DIFF. BETWEEN ENT. AIR TEMP. AND ENT. WATER TEMP. AT RATED C.F.M. AND G.P.M.
8		350–800	8	4	8R2	12 x 12-1/2	23100	350	2.0	1/2"	1/2"	
10		600–1400	10	4	10R2	18 x 14	34800	600	3.0	1/2"	1/2"	
12	EXTERIOR ZONE TITUS WITH 2-ROW HEATING COIL	1000–2000	12	8	12R2	18 x 14	54500	1000	4.0	3/4"	3/4"	
14		1200–2800	14	8	14R2	20 x 18	80600	1500	6.0	3/4"	3/4"	① UNLESS NOTED OTHERWISE ON FLOOR PLANS
16		2000–4000	16	8	16R2	24 x 18	120000	2000	7.0	1"	1"	

EXHAUST FANS

UNIT NO.	MANUFACTURER & MODEL NO.	NO. OF	SERVICE	CFM	TSP (IN.)	RPM	TYPE	ELECTRICAL HP	ELECTRICAL VOLTAGE	OPER. WT. (LBS.)	REMARKS
EF-1	COOK 195 ACRU-B	1	BUILDING	3,500	1	1045	UPBLAST CENTRIFUGAL	1.5	208V/3PH/60Hz	200	FURNISH WITH FACTORY ROOF CURB & BACKDRAFT DAMPER
EF-2	COOK 100 ACRU-B	1	ELEV. MACH. RM.	450	0.5	1480	UPBLAST CENTRIFUGAL	1/6	120V/1PH/60Hz	120	FURNISH WITH FACTORY ROOF CURB & BACKDRAFT DAMPER

VIBRATION ISOLATION

UNIT NO.	MANUFACTURER	ISOLATOR TYPE	DEFLECTION (IN.)	BASE TYPE	REMARKS
AC-1, AC-2	M.W. SAUSSE	VIC-EQ-SS	2.0	–	
P-1	M.W. SAUSSE	RMSG	1.0	RMSBP	
B-1, CU-1	M.W. SAUSSE	RC-PAD	–	–	
CAC-1	M.W. SAUSSE	RMXA	1	–	

SOUND ATTENUATORS

UNIT NO.	MANUFACTURER & MODEL NO.	NO. OF	SERVICE	SIZE (NO) W.xH.xL. (IN.)	CFM	AIR PD (IN.)	D.I.L. IN OCTAVE BAND (DB) @ 2000 FPM 125	250	500	1K	2K	4K	OPER. WT. (LBS.)	REMARKS
ST-1	IAC 5MS	1	AC-1 S.A.	(1) 30x42x60 (1) 15x42x60	15000	0.18	10	18	30	42	34	23	400	
ST-2	IAC 5MS	1	AC-1 R.A.	(2) 30x24x60 (1) 15x24x60	13100	0.13	11	18	32	42	33	22	420	
ST-3	IAC 5MS	1	AC-2 S.A.	(1) 30x42x60 (1) 15x42x60	15000	0.18	10	18	30	42	34	23	400	
ST-4	IAC 5MS	1	AC-2 R.A.	(2) 30x24x60 (1) 15x24x60	13100	0.13	11	18	32	42	33	22	420	

PUMPS

UNIT NO.	MANUFACTURER & MODEL NO.	NO. OF	SERVICE	GPM	FT. HD.	EFF(%)	RPM	ELECTRICAL HP	ELECTRICAL VOLTAGE	OPER. WT. (LBS.)	REMARKS
P-1	BELL & GOSSETT 1510 1-1/4 AC	1	HEATING HOT WATER	28	55	46.3	1750	2.0	208V/3PH/60HZ	200	TEFC MOTOR

COMPRESSION TANKS

UNIT NO.	MANUFACTURER & MODEL NO.	NO. OF	LOCATION	CAPACITY (GAL.)	SIZE L X DIA. (IN.)	OPER. WT. (LBS.)	REMARKS
CT-1	BELL & GOSSETT	1	ROOF	56	68x16	800	COMPRESSION TANK MOUNTED BY BOILER MANUFACTURER

COMPUTER ROOM A.C. UNITS (W/ CONDENSING UNIT)

UNIT NO.	MANUFACTURER & MODEL NO.	NO. OF	SUPPLY FAN CFM	SUPPLY FAN ESP (IN.)	COIL DATA FACE AREA (SQ. FT.)	ROWS / FPI	EAT (°F) DB	EAT (°F) % RH	REHEAT KW	REHEAT STEPS	HUMIDIFIER KW	HUMIDIFIER LBS./HR.	ELECTRICAL SUPPLY FAN HP	SUPPLY FAN FLA	FLA	OPD	VOLTAGE	FILTERS (NO.) & SIZE	FILTERS TYPE	OPER. WT. (LBS.)	CONDENSING UNIT	REMARKS
CAC-1	LIEBERT MMD18E	1	750	0.3	2.44	3 / --	72	50	4.7	1	0.88	2.5	0.2		31.2	40	208V/1PH/60HZ	(1) 20"x16"x1"	THROW AWAY	275	CU-1	

COMPUTER ROOM A.C. CONDENSING UNITS

UNIT NO.	MANUFACTURER & MODEL NO.	NO. OF	COOLING CAPACITY (BTU / HR.) TOTAL	SENS.	AMB. TEMP. (°F.)	CONDENSER CFM	ROWS / FPI	FACE AREA (SQ. FT.)	ELECTRICAL COMPRESSORS NO. OF	COMPRESSORS HP	COMPRESSORS FLA	COMPRESSORS LRA	CONDENSER FAN NO. OF	CONDENSER FAN HP	WSA	OPD	VOLTAGE	OPER. WT. (LBS)	INDOOR UNIT	REMARKS
CU-1	LIEBERT PFC020A	1	17700	14800	110	2200	2 / --	4.1	1	–	–	–	1	0.2	13.9	20.0	208V/1PH/60HZ	250	CAC-1	

EQUIPMENT SCHEDULES 2

SYMBOL	ABBR.	DESCRIPTION
	P.O.C.	POINT OF CONNECTION
		REMOVE EXIST. EQUIP. OR PIPES SHOWN HATCHED
		DUCT RISE / DUCT DROP
		DUCT WITH SOUND INSULATION
		DUCT SECTION – SUPPLY
		DUCT SECTION – RETURN
		DUCT SECTION – EXHAUST
D.L./U.C.	D.L./U.C.	DOOR LOUVER OR UNDERCUT
T x		ROOM THERMOSTAT & ZONE NUMBER
S x		SWITCH NUMBER
— CDWS —	CD.W.S.	CONDENSER WATER SUPPLY
— CDWR —	CD.W.R.	CONDENSER WATER RETURN
— CHWS —	CH.W.S.	CHILLED WATER SUPPLY
— CHWR —	CH.W.R.	CHILLED WATER RETURN
— HWS —	H.W.S.	HEATING HOT WATER SUPPLY
— HWR —	H.W.R.	HEATING HOT WATER RETURN
— RL —	R.L.	REFRIGERANT LIQUID
— RS —	R.S.	REFRIGERANT SUCTION
— RD —	R.D.	REFRIGERANT
	D.	AUTOMATIC DAMPER
	V.D.	MANUAL VOLUME DAMPER
	F.D.	FUSIBLE LINK FIRE DAMPER
	S.F.D.	COMBINATION SMOKE & FIRE DAMPER
	G.V.	GATE VALVE
	GL.V.	GLOBE VALVE
	CH.V.	CHECK VALVE
	B.V.	BALL VALVE
	BF.V.	BUTTERFLY VALVE
	B.C.	BALANCING COCK
	RED.	REDUCER
	STR.	STRAINER
	U.	UNION
	P.G.	PRESSURE GAUGE
	TH.	THERMOMETER
	A.V.	AIR VENT VALVE
	C.V.	CONTROL VALVE
	P.R.V.	PRESSURE REDUCING VALVE
	P.&T. R.V.	PRESSURE & TEMPERATURE RELIEF VALVE
		PIPE ANCHOR
SD	S.D.	SMOKE DETECTOR
	A.D.	ACCESS DOOR
	A.F.F.	ABOVE FINISHED FLOOR
	A.P.	ACCESS PANEL
	C.D.	CEILING DIFFUSER
	C.A.	COMBUSTION AIR
	D.T.R	DOWN THRU ROOF
	E.A.	EXHAUST AIR
	E.A.G.	EXHAUST AIR GRILLE
	E.A.R.	EXHAUST AIR REGISTER
	E.P.	ELECTRIC – PNEUMATIC
	H.O.A.	HAND – OFF – AUTOMATIC
	N.C.	NORMALLY CLOSED
	N.O.	NORMALLY OPEN
	N.I.C.	NOT IN CONTRACT
	M.A.	MAKE-UP AIR
	O.A.	OUTSIDE AIR
	P.E.	PNEUMATIC – ELECTRIC
	RE. A.	RELIEF AIR
	RE. A. G.	RELIEF AIR GRILLE
	R.A.	RETURN AIR
	R.A.G.	RETURN AIR GRILLE
	R.A.R.	RETURN AIR REGISTER
	S.A.	SUPPLY AIR
	S.A.G.	SUPPLY AIR GRILLE
	S.A.R.	SUPPLY AIR REGISTER
	S.I.	SOUND INSULATION
	T.	THROAT
	U.N.O.	UNLESS NOTED OTHERWISE
	U.T.R.	UP THRU ROOF
	V.A.V.	VARIABLE AIR VOLUME
	V.T.R.	VENT THRU ROOF
M		FURNISHED & INSTALLED BY MECHANICAL
ME		FURNISHED BY MECHANICAL INSTALLED BY ELECTRICAL
EM		FURNISHED BY ELECTRICAL INSTALLED BY MECHANICAL
E		FURNISHED & INSTALLED BY ELECTRICAL
		CEILING DIFFUSER – NECK SIZE (IN. SQ.) – AIR QUANTITY (C.F.M.)
		RETURN AIR REGISTER – NECK SIZE (IN. x IN.) – AIR QUANTITY (C.F.M.)
		SUPPLY & EXHAUST REGISTER – NECK SIZE (IN. x IN.) – AIR QUANTITY (C.F.M.)
		LINEAR SUPPLY – NO. OF SLOTS – WIDTH – C.F.M. / FT. – TOTAL LENGTH

APPROVED
MAY 1 2006
BUILDING & SAFETY
CITY OF FONTANA

APPROVED
REVIEWED BY ___ DATE ___
Approval of these plans shall not be construed to be a permit for, or an approval of any violation of any of ... or local ... this.

LEGEND 1

LANGDON WILSON
ARCHITECTURE PLANNING INTERIORS
18800 VON KARMAN AVENUE, SUITE 200
IRVINE, CALIFORNIA 92612-1517
949 · 833 · 9193

STRUCTURAL
KPFF 949 · 252 · 1022
MECHANICAL
TKSC 949 · 756 · 0565
ELECTRICAL
GLP 714 · 751 · 1851
LANDSCAPE
FRANK RADMACHER 714 · 832 · 1774
CIVIL ENGINEER
IKE CONSULTING 714 · 241 · 0606
AUDIO / VISUAL
VENEKLASEN ASSOCIATES 310 · 450 · 1733
DATA TELEPHONE
PLANNET CONSULTING 714 · 982 · 5800

CITY OF FONTANA
DEVELOPMENT SERVICES ORGANIZATION BUILDING
8353 SIERRA AVENUE FONTANA, CALIFORNIA

REV.	DATE	ISSUED FOR	REV.	DATE	ISSUED FOR
	4/17/06	PERMIT/BID			

Stamp

DATE: SCALE: NONE
DRAWN BY: –
JOB NO. CADD TITLE: M0-1.dwg
SHEET TITLE:
LEGEND, SCHEDULES, AND NOTES
SHEET NUMBER:
M0-1

© Copyright 2005 Langdon Wilson

TKSC #05-175

PERMIT SET / BID SET 04-17-06

PERFORMANCE CERTIFICATE OF COMPLIANCE Part 1 of 3 PERF-1

PROJECT NAME: City of Fontana Development Services Organization		DATE: 12/5/2005
PROJECT ADDRESS: 8353 Sierra Avenue Fontana		Building Permit #
PRINCIPAL DESIGNER - ENVELOPE: Langdon Wilson Architecture	TELEPHONE: (949) 833-9193	
DOCUMENTATION AUTHOR: TSUCHIYAMA KAINO SUN & CARTER	TELEPHONE: (949) 756-0565	Checked by/Date Enforcement Agency Use

GENERAL INFORMATION

DATE OF PLANS	BUILDING CONDITIONED FLOOR AREA: 24,900 Sq.Ft.	CLIMATE ZONE: 10
BUILDING TYPE	☒ NONRESIDENTIAL ☐ HIGH RISE RESIDENTIAL ☐ HOTEL/MOTEL GUEST ROOM	
PHASE OF CONSTRUCTION	☒ NEW CONSTRUCTION ☐ ADDITION ☐ ALTERATION ☐ EXISTING + ADDITION	

STATEMENT OF COMPLIANCE

This Certificate of Compliance lists the building features and performance specifications needed to comply with Title 24, Parts 1 and 6 of the California Code of Regulations. This certificate applies only to a Building using the performance compliance approach.

The documentation preparer hereby certifies that the documentation is accurate and complete.

DOCUMENTATION AUTHOR: TKSC SIGNATURE: [signature] DATE: 4.14.06

The Principal Designer hereby certifies that the proposed building design represented in this set of construction documents is consistent with the other compliance forms and worksheets, with the specifications, and with any other calculations submitted with this permit application. The proposed building as designed meets the energy efficiency requirements contained in sections 110, 116 through 118, and 140, 142, 143 or 149 of Title 24, Part 6.

ENV. LTG. MECH.

☐ ☐ ☑ 1. I hereby affirm that I am eligible under the provisions of Division 3 of the Business and Professions Code to sign this document as the person responsible for its preparation; and that I am licensed in the State of California as a civil engineer, mechanical engineer, or I am a licensed architect.

☐ ☐ ☐ 2. I affirm that I am eligible under the provisions of Division 3 of the Business and Professions Code Section 5537.2 or 6737.3 to sign this document as the person responsible for its preparation; and that I am a licensed contractor performing this work.

☐ ☐ ☐ 3. I affirm that I am eligible under Division 3 of the Business and Professions Code to sign this document because it pertains to a structure or type of work described as exempt pusuant to Business and Professions Code Sections 5537, 5538, and 6737.1. (These sections of the Business and Professions Code are printed in full in the Nonresidential Manual.)

ENVELOPE COMPLIANCE

Indicate location on plans of Note Block for Mandatory Measures

Required Forms: ENV-1

PRINCIPAL ENVELOPE DESIGNER - NAME: Langdon Wilson Architecture SIGNATURE: [signature] LIC. NO.: C-7181 DATE: 4-14-06

LIGHTING COMPLIANCE

Indicate location on plans of Note Block for Mandatory Measures: Lighting Compliance Not In The Scope Of This Submittal

Required Forms

PRINCIPAL LIGHTING DESIGNER - NAME SIGNATURE LIC. NO. DATE

MECHANICAL COMPLIANCE

Indicate location on plans of Note Block for Mandatory Measures

Required Forms: MECH-1, MECH-2, MECH-3

PRINCIPAL MECHANICAL DESIGNER - NAME: Tsuchiyama Kaino Sun & Carter SIGNATURE: [signature] LIC. NO.: M29973 DATE: 4-14-06

Run Initiation Time: 12/05/05 13:06:09 Run Code: 1133816769

EnergyPro 4.0 by EnergySoft User Number: 2945 Job Number: 05-175 Page:3 of 12

PERFORMANCE CERTIFICATE OF COMPLIANCE Part 2 of 3 PERF-1

PROJECT NAME: City of Fontana Development Services Organization DATE: 12/5/2005

ANNUAL TDV ENERGY USE SUMMARY (kBtu/sqft-yr)

ENERGY COMPONENT	Standard Design	Proposed Design	Compliance Margin
Space Heating	5.19	1.93	3.26
Space Cooling	116.01	108.88	7.14
Indoor Fans	31.66	32.99	-1.33
Heat Rejection	0.00	0.00	0.00
Pumps & Misc.	1.00	1.20	-0.20
Domestic Hot Water	0.00	0.00	0.00
Lighting	76.17	76.17	0.00
Receptacle	86.62	86.62	0.00
Process	0.00	0.00	0.00
TOTALS:	316.65	307.78	8.87

Percent better than Standard: 2.8% (2.8% excluding process)

BUILDING COMPLIES

GENERAL INFORMATION

Building Orientation	(North) 0 deg	Conditioned Floor Area	24,900 sqft
Number of Stories	2	Unconditioned Floor Area	0 sqft
Number of Systems	2	Conditioned Footprint Area	0 sqft
Number of Zones	2	Fuel Type	Natural Gas

	Orientation	Gross Area	Glazing Area	Glazing Ratio
Front Elevation	(North)	4,928 sqft	2,869 sqft	58.2%
Left Elevation	(East)	2,100 sqft	636 sqft	30.3%
Rear Elevation	(South)	4,984 sqft	1,680 sqft	33.7%
Right Elevation	(West)	2,072 sqft	903 sqft	43.6%
Total		14,084 sqft	6,088 sqft	43.2%
Roof		12,450 sqft	0 sqft	0.0%

	Standard	Proposed
Lighting Power Density	1.150 W/sqft	0.000 W/sqft
Prescriptive Env. Heat Loss	8,776 Btu/h	6,480 Btu/h
Prescriptive Env. Heat Gain	594,130 Btu/h-F	720,650 Btu/h-F

Remarks:

Run Initiation Time: 12/05/05 13:06:09 Run Code: 1133816769

EnergyPro 4.0 by EnergySoft User Number: 2945 Job Number: 05-175 Page:4 of 12

PERFORMANCE CERTIFICATE OF COMPLIANCE Part 3 of 3 PERF-1

PROJECT NAME: City of Fontana Development Services Organization DATE: 12/5/2005

ZONE INFORMATION

System Name	Zone Name	Occupancy Type	Floor Area (sqft.)	Inst. LPD (W/sf)[1]	Ctrl. Credits (W/sf)[2]	Allowed LPD Area (W/sf)[3]	Allowed LPD Tailored (W/sf)[4]	Proc. Loads (W/sf)
Rooftop VAV AC-2	2nd Floor	Office	12,450	0.000				
Rooftop VAV AC-1	1st Floor	Comp Bldg Office	12,450	0.000				

Notes: 1. See LTG-2C (Items marked with asterisk, see LTG-2-C by others) 2. See LTG-4-C 3. See LTG-5-C (by others) 4. See LTG-5-C Items above require special documentation

EXCEPTIONAL CONDITIONS COMPLIANCE CHECKLIST

The local enforcement agency should pay special attention to the items specified in this checklist. These items require special written justification and documentation, and special verification to be used with the performance approach. The local enforcement agency determines the adequacy of the justification, and may reject a building or design that otherwise complies based on the adequacy of the special justification and documentation submitted.

- The Roof R-19 Built Up Roof is a Certified Cool Roof with Reflectance = 0.30, Emittance = 0.75.
- The HVAC System "McQuay RDT 050 AC-1" includes a Variable Speed Drive on the Fan.
- The HVAC System "McQuay RDT 050 AC-1: Premium Eff" 14.10 BHP Supply Fan Motor has been specified.
- The HVAC System "McQuay RDT 050 AC-1: Premium Eff" 3.60 BHP Return Fan Motor has been specified.
- The HVAC System "McQuay RDT 050 AC-2" includes a Variable Speed Drive on the Fan.
- The HVAC System "McQuay RDT 050 AC-2: Premium Eff" 14.50 BHP Supply Fan Motor has been specified.
- The HVAC System "McQuay RDT 050 AC-2: Premium Eff" 3.60 BHP Return Fan Motor has been specified.
- A Premium Eff 2.00 BHP Hot Water Pump Motor has been specified.
- The Room "1st Floor: Premium Eff" 1.50 BHP Exhaust Fan Motor has been specified.

The exceptional features listed in this performance approach application have specifically been reviewed. Adequate written justification and documentation for their use have been provided by the applicant.

Authorized Signature or Stamp

Run Initiation Time: 12/05/05 13:06:09 Run Code: 1133816769

EnergyPro 4.0 by EnergySoft User Number: 2945 Job Number: 05-175 Page:5 of 12

CERTIFICATE OF COMPLIANCE ENV-1-C

PROJECT NAME: City of Fontana Development Services Organization DATE: 12/5/2005

OPAQUE SURFACES

#	Surface Type	Area	U-Fac.	Insulation Cav.	Insulation Cont.	Act. Azm.	Tilt	Cond. Status	Joint Appendix IV Reference	Location / Comments
1	Roof	12,450	0.109	2 in.	R-19.0	0	0	New	06-A6	2nd Floor
2	Wall	584	0.177	None	R-13.0	270	90	New	13-F5	2nd Floor
3	Wall	1,652	0.177	None	R-13.0	180	90	New	13-F5	2nd Floor
4	Wall	782	0.177	None	R-13.0	90	90	New	13-F5	2nd Floor
5	Wall	1,061	0.177	None	R-13.0	0	90	New	13-F5	2nd Floor
6	Wall	584	0.177	None	R-13.0	270	90	New	13-F5	1st Floor
7	Wall	1,652	0.177	None	R-13.0	180	90	New	13-F5	1st Floor
8	Wall	682	0.177	None	R-13.0	90	90	New	13-F5	1st Floor
9	Wall	998	0.177	None	R-13.0	0	90	New	13-F5	1st Floor

* N, E, A, R (New, Existing, Altered, Removed)

FENESTRATION SURFACES

☐ More than or equal to 10,000 sq.ft. of site-built fenestration area must include a label certificate either issued by NFRC or provide a CEC Default Label Certificate using the default U-factors from Standards Table 116-A and B. Certificate shall be filed in the contractor's project office during construction and in the building manager's office after construction.

#	Type		Area	U-Fac[1]		SHGC[2]		Act. Azm.	Cond. Stat.	Glazing Type	Location/ Comments
1	Window	Right (West)	452	0.610	116-A	0.45	COG	270	New	Fontana Glazing	2nd Floor
2	Window	Rear (South)	840	0.610	116-A	0.45	COG	180	New	Fontana Glazing	2nd Floor
3	Window	Left (East)	268	0.610	116-A	0.45	COG	90	New	Fontana Glazing	2nd Floor
4	Window	Front (North)	1,403	0.610	116-A	0.45	COG	0	New	Fontana Glazing	2nd Floor
5	Window	Right (West)	452	0.610	116-A	0.45	COG	270	New	Fontana Glazing	1st Floor
6	Window	Rear (South)	840	0.610	116-A	0.45	COG	180	New	Fontana Glazing	1st Floor
7	Window	Left (East)	368	0.610	116-A	0.45	COG	90	New	Fontana Glazing	1st Floor
8	Window	Front (North)	1,466	0.610	116-A	0.45	COG	0	New	Fontana Glazing	1st Floor

(1) U-factor Type: 116-A Default Table from Standards, Table NI-1 Default Table from the ACM Manual Appendix, NFRC Labeled value.
(2) SHGC Type: 116-B Default Table from Standards, COG Center of Glass, NFRC Labeled Value

EXTERIOR SHADING

#	Exterior Shade Type	SHGC	Window Hgt.	Window Wd.	Overhang Len.	Overhang Hgt.	LExt.	RExt.	Left Fin Dist.	Left Fin Len.	Left Fin Hgt.	Right Fin Dist.	Right Fin Len.	Right Fin Hgt.
1	None	0.76												
2	None	0.76												
3	None	0.76												
4	None	0.76												
5	None	0.76												
6	None	0.76												
7	None	0.76												
8	None	0.76												

MINIMUM SKYLIGHT AREA FOR LARGE ENCLOSED SPACES

☐ The proposed building contains an enclosed space with floor area greater than 25,000 sq.ft, a ceiling height greater than 15 feet and a LPD for general lighting of at least 0.5 W/sq.ft. If this box is checked, ENV-4-C must be filled out when submitting under the Prescriptive Compliance Approach.

Run Initiation Time: 12/05/05 13:06:09 Run Code: 1133816769

EnergyPro 4.0 by EnergySoft User Number: 2945 Job Number: 05-175 Page:6 of 12

CERTIFICATE OF COMPLIANCE MECH-1-C

PROJECT NAME: City of Fontana Development Services Organization DATE: 12/5/2005

Designer:

This form is to be used by the designer and attached to the plans. Listed below are all the acceptance tests for mechanical systems. The designer is required to check the boxes by all acceptance tests that apply and list all equipment that requires an acceptance test. If all equipment of a certain type requires a test, list the equipment description and the number of systems to be tested in parentheses. The NJ number designates the Section in the Appendix of the Nonresidential ACM Manual that describes the test. Also indicate the person responsible for performing the tests (i.e. the installing contractor, design professional or an agent selected by the owner). Since this form will be part of the plans, completion of this section will allow the responsible party to budget for the scope of work appropriately.

Building Departments:

SYSTEM ACCEPTANCE. Before an occupancy permit is granted for a newly constructed building or space, or a new space-conditioning system serving a building or space is operated for normal use, all control devices serving the building or space shall be certified as meeting the Acceptance Requirements for Code Compliance.

In addition a Certificate of Acceptance, MECH-1-A Form shall be submitted to the building department that certifies plans, specifications, installation certificates, and operating and maintenance information meet the requirements of Section 10-103(b) and Title 24 Part 6.

STATEMENT OF COMPLIANCE

☑ MECH-2-A: Ventilation System Acceptance Document -Variable Air Volume Systems Outdoor Air Acceptance -Constant Air Volume Systems Outdoor Air Acceptance Equipment requiring acceptance testing: AC-1, AC-2	INSTALLING CONTRACTOR/ TAB CONTRACTOR
☑ MECH-3-A: Packaged HVAC Systems Acceptance Document Equipment requiring acceptance testing: AC-1, AC-2	INSTALLING CONTRACTOR/ TAB CONTRACTOR
☑ MECH-4-A: Air Distribution Acceptance Document Equipment requiring acceptance testing: ALL SUPPLY AND RETURN AIR DUCTING	INSTALLING CONTRACTOR/ TAB CONTRACTOR
☑ MECH-5-A: Air-Side Economizer Acceptance Document Equipment requiring acceptance testing: AC-1, AC-2	INSTALLING CONTRACTOR/ TAB CONTRACTOR
☐ MECH-6-A: Demand Control Ventilation Acceptance Document Equipment requiring acceptance testing: N/A	
☑ MECH-7-A: Supply Fan Variable Flow Control Acceptance Document Equipment requiring acceptance testing: AC1, AC-2	INSTALLING CONTRACTOR TAB CONTRACTOR
☐ MECH-8-A: Hydronic System Control Acceptance Document -Variable Flow Controls -Automatic Isolation Con-trols -Water-loop Heat Pump Controls -Variable Frequency Controls Equipment requiring acceptance testing: N/A	

EnergyPro 4.0 by EnergySoft User Number: 2945 Job Number: 05-175 Page:7 of 12

AIR SYSTEM REQUIREMENTS Part 1 of 2 MECH-2-C

PROJECT NAME: City of Fontana Development Services Organization DATE: 12/5/2005

SYSTEM FEATURES

ITEM OR SYSTEM TAG(S)	T-24 Section	AIR SYSTEMS, Central or Single Zone: Rooftop VAV AC-2	Rooftop VAV AC-1	
Number of Systems		1	1	
MANDATORY MEASURES		Reference on Plans or Specification[1]		
Heating Equipment Efficiency	112(a)	n/a	n/a	
Cooling Equipment Efficiency	112(a)	9.5 EER	9.5 EER	
Heat Pump Thermostat	112(b)	n/a	n/a	
Furnace Controls	112(c), 115(a)	n/a	n/a	
Natural Ventilation	121(b)	Yes	Yes	
Minimum Ventilation	121(b)	1868 cfm	3500 cfm	
VAV Minimum Position Control	121(c)	Yes	Yes	
Demand Control Ventilation	121(c)	No	No	
Time Control	121(c), 122(e)	Programmable Switch	Programmable Switch	
Setback and Setup Control	122(e)	Heating & Cooling Required	Heating & Cooling Required	
Outdoor Damper Control	122(f)	Auto	Auto	
Isolation Zones	122(g)	n/a	n/a	
Pipe Insulation	123			
Duct Insulation	124	R-4.2	R-8.0	
PRESCRIPTIVE MEASURES				
Calculated Heating Capacity x 1.43[2]	144 (a & b)	n/a	n/a	
Proposed Heating Capacity[2]	144 (a & b)	0 btuh	0 btuh	
Calculated Sensible Cooling Capacity x 1.21[2]	144 (a & b)	n/a	n/a	
Proposed Sensible Cooling Capacity[2]	144 (a & b)	469,879 btuh	479,091 btuh	
Fan Control	144 (c)	Variable Speed	Variable Speed	
DP Sensor Location	144 (c)			
Supply Pressure Reset (DDC only)	144 (c)	Yes	Yes	
Simultaneous Heat/Cool	144 (d)	Yes	Yes	
Economizer	144 (e)	Fixed Enth (Integrated)	Fixed Enth (Integrated)	
Heating Air Supply Reset	144 (f)	Constant Temp	Constant Temp	
Cooling Air Supply Reset	144 (f)	OA Reset	OA Reset	
Duct Sealing for Prescriptive Compliance[3]	144 (k)	No	No	

1: For each central and single zone air systems (or group of similar units) fill in the reference to sheet number and/or specification section and paragraph number where the required features are documented. If a requirement is not applicable, put "N/A" in the column.

2: Not required for hydronic heating and cooling. Either enter a value here or put in reference of plans and specifications per footnote 1.

3: Enter Yes if System is: Constant Volume, Single Zone; Serves < 5,000 sqft; Has > 25% duct in unconditioned space. Duct sealing is required for Prescriptive Compliance, see PERF-1 for performance method duct sealing requirements.

NOTES TO FIELD - For Building Department Use Only

Run Initiation Time: 12/05/05 13:06:09 Run Code: 1133816769

EnergyPro 4.0 by EnergySoft User Number: 2945 Job Number: 05-175 Page:8 of 12

WATER SIDE SYSTEM REQUIREMENTS Part 2 of 2 MECH-2-C

PROJECT NAME: City of Fontana Development Services Organization DATE: 12/5/2005

SYSTEM FEATURES

ITEM OR SYSTEM TAG(S)	T-24 Section	[2] WATER SIDE SYSTEMS: Chillers, Towers, Boilers, Hydronic Loops: Parker LT490 LR		
Number of Systems		1		
MANDATORY MEASURES		Reference on Plans or Specification[1]		
Equipment Efficiency	112(a)	84%		
Pipe Insulation	123	HW Piping		
PRESCRIPTIVE MEASURES				
Calculated Capacity	144 (a & b)	n/a		
Proposed Capacity	144 (a & b)	411,600 btuh		
Tower Fan Controls	144 (h)	n/a		
Tower Flow Controls	144 (h)	n/a		
Variable Flow System Design	144 (j)			
Chiller and Boiler Isolation	144 (j)	n/a		
CHW and HHW Reset Controls	144 (j)	n/a		
WLHP Isolation Valves	144 (j)	n/a		
VSD on CHW, CW & WLHP Pumps > 5 HP	144 (j)	n/a		
DP Sensor Location	144 (j)	n/a		

1: For each chiller, cooling tower, boiler, and hydronic loop (or groups of similar equipment) fill in the reference to sheet number and/or specification section and paragraph number where the required features are documented. If a requirement is not applicable, put "N/A" in the column.

2: Water side systems include wet side system using other liquids such as glycol or brine.

ITEM OR SYSTEM TAG(S)		Service Hot Water, Pool Heating		
Number of Systems				
MANDATORY MEASURES		Reference on Plans or Specification[1]		
Water Heater Certification	113 (a)			
Water Heater Efficiency	113 (b)			
Service Water Heating Installation	113 (c)			
Pool and Spa Efficiency and Control	114 (a)			
Pool and Spa Installation	114 (b)			
Pool Heater - No Pilot Light	115 (c)			
Spa Heater - No Pilot Light	115 (d)			

1: For each water heater, pool heat and domestic water loop (or groups of similar equipment) fill in the reference to sheet number and/or specification section and paragraph number where the required features are documented. If a requirement is not applicable, put "N/A" in the column.

NOTES TO FIELD - For Building Department Use Only

Run Initiation Time: 12/05/05 13:06:09 Run Code: 1133816769

EnergyPro 4.0 by EnergySoft User Number: 2945 Job Number: 05-175 Page:9 of 12

MECHANICAL VENTILATION MECH-3-C

PROJECT NAME: City of Fontana Development Services Organization DATE: 12/5/2005

MECHANICAL VENTILATION (Section 121(b)2)

A ZONE/SYSTEM	B Condition Area (SF)	C CFM per Square Foot	D Min CFM by Area (B x C)	E Number of People	F CFM per Person	G Min CFM by Occupant (E x F)	H REQ'D V.A. Max of (D or G)	I Design Vent. Air CFM	J 30% of Design Zone Supply CFM	K B x 0.4 CFM/sq. ft.	L Max of Columns H, J, K or 300 CFM	M Design Min. Air Setpoint	N Transfer Air
2nd Floor	12,450	0.15	1,868				1,868	1,868					
Rooftop VAV AC-2						Total	1,868	1,868					
1st Floor	12,450	0.15	1,868				1,868	3,500					
Rooftop VAV AC-1						Total	1,868	3,500					

(Columns J–M: PRESCRIPTIVE REHEAT LIMITATION (Section 144(d)) VAV MINIMUM; Columns B–D: AREA BASIS; E–G: OCCUPANCY BASIS)

- C: Minimum ventilation rate per Section 121, Table 121-A.
- E: Based on fixed seat or the greater of the expected number of occupants and 50% of the CBC occupant load for egress purposes for spaces without fixed seating.
- H: Required Ventilation Air (REQ'D V.A.) is the larger of the ventilation rates calculated on and AREA or OCCUPANCY BASIS (column D or G).
- I: Must be greater than or equal to H, or use Transfer Air (column N) to make up the difference.
- J: Design fan supply cfm (Fan CFM) x 30%; or
- K: Condition area (ft. sq.) x 0.4 cfm/ft. sq.; or
- L: Maximum of Columns H, J, K, or 300 cfm
- M: This must be less than or equal to Column L and greater that or equal to the sum of Columns H + N.
- N: Transfer air must be provided where the Required Ventilation Air (column H) is greater than the Design Minimum Air (column M). Where required, transfer air must be greater than or equal to the difference between the Required Ventilation Air (column H) and the Design Minimum Air (column M), column H - M.

Run Initiation Time: 12/05/05 13:06:09 Run Code: 1133816769

EnergyPro 4.0 by EnergySoft User Number: 2945 Job Number: 05-175 Page:10 of 12

MECHANICAL EQUIPMENT DETAILS Part 1 of 2 MECH-5-C

PROJECT NAME: City of Fontana Development Services Organization DATE: 12/5/2005

CHILLER AND TOWER SUMMARY

Equipment Name	Equipment Type	Qty.	Efficiency	Tons	Pumps Tot. Qty	GPM	BHP	Motor Eff.	Drive Eff.	Pump Control
Hot Water Pumps					1	28	2.00	86.5%	97.0%	One-Speed, 3 Way Valves

DHW / BOILER SUMMARY

System Name	System Type	Distribution Type	Qty	Rated Input	Vol. (Gals.)	Condition Status	Energy Factor or RE	Standby Loss or Pilot	TANK INSUL. Ext. R-Val.
Parker LT490 LR	Large Gas	Hydronic Heating		490,000	0	New	0.84	0.00%	0.0

MULTI-FAMILY CENTRAL WATER HEATING DETAILS

Control	Hot Water Pump #	HP	Type	Hot Water Piping Length (ft) In Plenum	Outside	Buried	Add 1/2" Insulation

CENTRAL SYSTEM RATINGS

System Name	System Type	Qty	Heating Output	Aux. kW	Eff.	Cooling Output	Efficiency	Condition Status	Economizer Type
McQuay RDT 050 AC-2	Packaged VAV	1	0	0.0	n/a	530,420	9.5 EER	New	Fixed Enth (Integrated)
McQuay RDT 050 AC-1	Packaged VAV	1	0	0.0	n/a	521,621	9.5 EER	New	Fixed Enth (Integrated)

CENTRAL SYSTEM FAN SUMMARY

System Name	Fan Type	Motor Location	Supply CFM	Supply BHP	Supply Motor Eff.	Supply Drive Eff.	Return CFM	Return BHP	Return Motor Eff.	Return Drive Eff.
McQuay RDT 050 AC-2	Variable Speed	Draw-Through	15,000	14.50	91.7%	97.0%	13,100	3.60	89.5%	97.0%
McQuay RDT 050 AC-1	Variable Speed	Draw-Through	15,000	14.10	91.7%	97.0%	13,100	3.60	89.5%	97.0%

Run Initiation Time: 12/05/05 13:06:09 Run Code: 1133816769

EnergyPro 4.0 by EnergySoft User Number: 2945 Job Number: 05-175 Page:11 of 12

MECHANICAL EQUIPMENT DETAILS Part 2 of 2 MECH-5-C

PROJECT NAME: City of Fontana Development Services Organization DATE: 12/5/2005

ZONE TERMINAL SUMMARY

Zone Name	VAV Terminal Box System Type	Qty	Min. CFM Ratio	Reheat Coil Type	Reheat Coil DeltaT	Terminal Fan CFM	BHP	Motor Eff.	Drive Eff.	Baseboard Type	Output
2nd Floor	VAV Box	15	30%	Hot Water	40	none				none	n/a
1st Floor	VAV Box	15	30%	Hot Water	40	none				none	n/a

EXHAUST FAN SUMMARY

Room Name	Qty.	CFM	BHP	Motor Eff.	Drive Eff.	Room Name	Qty.	CFM	BHP	Motor Eff.	Drive Eff.
1st Floor	1.0	3,500	1.50	86.5%	97.0%						

Run Initiation Time: 12/05/05 13:06:09 Run Code: 1133816769

EnergyPro 4.0 by EnergySoft User Number: 2945 Job Number: 05-175 Page:12 of 12

TITLE 24 MANDATORY MEASURES

APPLICABLE	TITLE 24 MANDATORY MEASURES
	EQUIPMENT AND SYSTEMS EFFICIENCY
☒	ANY APPLIANCE FOR WHICH THERE IS A CALIFORNIA STANDARD ESTABLISHED IN THE APPLIANCE EFFICIENCY STANDARDS MAY BE INSTALLED ONLY IF THE MANUFACTURER HAS CERTIFIED TO THE COMMISSION, AS SPECIFIED IN THOSE REGULATIONS, THAT THE APPLIANCE COMPLIES WITH THE APPLICABLE STANDARD FOR THAT APPLIANCE.
☒	PIPING AND DUCTING SYSTEMS SHALL BE INSULATED IN ACCORDANCE WITH THE REQUIREMENTS OF THE TITLE 24 STANDARDS AND ALL CODES HAVING JURISDICTION.
	CONTROLS
☒	EACH SPACE CONDITIONING SYSTEM SHALL BE INSTALLED WITH AN AUTOMATIC TIME SWITCH WITH AN ACCESSIBLE MANUAL OVERRIDE THAT ALLOWS OPERATION OF THE SYSTEM DURING OFF-HOURS FOR UP TO 4 HOURS. THE TIME SWITCH SHALL BE CAPABLE OF PROGRAMMING DIFFERENT SCHEDULES FOR WEEKDAYS AND WEEKENDS, INCORPORATE AN AUTOMATIC HOLIDAY "SHUT-OFF" FEATURE THAT TURNS OFF ALL LOADS FOR AT LEAST 24 HOURS, THEN RESUMES THE NORMALLY SCHEDULED OPERATION, AND HAS PROGRAM BACKUP CAPABILITIES THAT PREVENT THE LOSS OF THE DEVICE'S PROGRAM AND TIME SETTING FOR AT LEAST 10 HOURS IF POWER IS INTERRUPTED.
☒	EACH SPACE CONDITIONING SYSTEM SHALL BE INSTALLED WITH CONTROLS THAT TEMPORARILY RESTART AND TEMPORARILY OPERATE THE SYSTEM AS REQUIRED TO MAINTAIN A SETBACK HEATING AND COOLING THERMOSTAT SETPOINT.
☒	EACH SPACE CONDITIONING ZONE SHALL BE CONTROLLED BY AN INDIVIDUAL THERMOSTATIC CONTROL THAT RESPONDS TO TEMPERATURE WITHIN THE ZONE. WHERE USED TO CONTROL HEATING, THE CONTROL SHALL BE ADJUSTABLE DOWN TO 55° F OR LOWER. FOR COOLING, THE CONTROL SHALL BE ADJUSTABLE UP TO 85° F OR HIGHER. WHERE USED TO CONTROL BOTH HEATING AND COOLING, THE CONTROL SHALL BE CAPABLE OF PROVIDING A DEAD BAND OR AT LEAST 5° F WITHIN WHICH THE SUPPLY OR HEATING AND COOLING IS SHUT OFF OF REDUCED TO A MINIMUM.
☒	THERMOSTATS SHALL HAVE NUMERIC SETPOINTS IN °F.
☒	THERMOSTATS SHALL HAVE ADJUSTABLE SETPOINT STOPS ACCESSIBLE ONLY TO AUTHORIZED PERSONNEL.
☐	HEAT PUMPS SHALL BE INSTALLED WITH CONTROLS TO PREVENT ELECTRIC RESISTANCE SUPPLEMENTARY HEATER OPERATION WHEN THE HEATING LOAD CAN BE MET BY THE HEAT PUMP ALONE. ELECTRIC RESISTANCE SUPPLEMENTARY HEATING OPERATION IS PERMITTED DURING TRANSIENT PERIODS, SUCH AS START-UPS AND FOLLOWING ROOM THERMOSTAT SETPOINT ADVANCE, WHEN CONTROLS ARE PROVIDED WHICH USE PREFERENTIAL RATE CONTROL, INTELLIGENT RECOVERY, STAGING, RAMPING, OR SIMILAR CONTROL MECHANISMS DESIGNED TO PRECLUDE THE UNNECESSARY OPERATION OF SUPPLEMENTARY HEATING DURING THE RECOVERY PERIOD. SUPPLEMENTARY HEATER OPERATION IS ALSO PERMITTED DURING DEFROST.
☒	GRAVITY OR AUTOMATIC DAMPERS INTERLOCKED AND CLOSED ON FAN SHUTDOWN SHALL BE PROVIDED ON THE OUTSIDE AIR INTAKES AND DISCHARGES OF ALL SPACE CONDITIONING AND EXHAUST SYSTEMS.
☐	ALL GRAVITY VENTILATING SYSTEMS SHALL BE PROVIDED WITH AUTOMATIC OR READILY ACCESSIBLE MANUALLY OPERATED DAMPERS IN ALL OPENINGS TO THE OUTSIDE, EXCEPT FOR COMBUSTION AIR OPENINGS.
☒	ALL BALANCING: ALL SPACE CONDITIONING AND VENTILATION SYSTEMS SHALL BE BALANCED TO THE QUANTITIES SPECIFIED IN THESE PLANS, IN ACCORDANCE WITH AND PERFORMED BY A COMPANY CERTIFIED BY THE NATIONAL ENVIRONMENTAL BALANCING BUREAU (NEBB) PROCEDURAL STANDARDS (1983), OR ASSOCIATED AIR BALANCE COUNCIL (AABC) NATIONAL STANDARDS (1986).
☒	OUTSIDE AIR CERTIFICATION: THE SYSTEM SHALL PROVIDE THE MINIMUM OUTSIDE AIR AS SHOWN ON THE MECHANICAL DRAWINGS, AND SHALL BE MEASURED AND CERTIFIED BY THE INSTALLING LICENSED C-20 MECHANICAL CONTRACTOR.
☒	THE AIR CONDITIONING SYSTEM SHALL BE ENERGIZED 1 HOUR IMMEDIATELY PRIOR TO OCCUPANCY TO PROVIDE THE MINIMUM REQUIRED VENTILATION RATE.

APPROVED
MAY 0 1 2006
BUILDING & SAFETY
CITY OF FONTANA

DATE
... shall not be ... of any violation of any of the provisions of the state or local ... One set of approved plans must be kept on the job until completion.
WILLDAN

TITLE 24 COMPLIANCE FORMS

1

LANGDON WILSON
ARCHITECTURE
PLANNING
INTERIORS

18800 VON KARMAN AVENUE, SUITE 200
IRVINE, CALIFORNIA 92612-1517
949 · 833 · 9193

STRUCTURAL
KPFF 949 · 252 · 1022
MECHANICAL
TKSC 949 · 756 · 0565
ELECTRICAL
GLP 714 · 751 · 1851
LANDSCAPE
FRANK RADMACHER 714 · 832 · 1774
CIVIL ENGINEER
IKE CONSULTING 714 · 241 · 0606
AUDIO / VISUAL
VENEKLASEN ASSOCIATES 310 · 450 · 1733
DATA TELEPHONE
PLANNET CONSULTING 714 · 982 · 5800

CITY OF FONTANA
DEVELOPMENT SERVICES
ORGANIZATION BUILDING
8353 SIERRA AVENUE FONTANA, CALIFORNIA

CITY OF FONTANA CALIFORNIA

REV.	DATE	ISSUED FOR	REV.	DATE	ISSUED FOR
	4/17/06	PERMIT/BID			

Stamp
REGISTERED PROFESSIONAL ENGINEER No. M29973 Exp. 06-30-06 MECHANICAL STATE OF CALIFORNIA

04-17-06

DATE: SCALE: NONE
DRAWN BY: -
JOB NO. CADD TITLE: M0-2.dwg

SHEET TITLE:
TITLE 24 COMPLIANCE FORMS

SHEET NUMBER:
M0-2

© Copyright 2005 Langdon Wilson

PERMIT SET / BID SET

TKSC #05-175

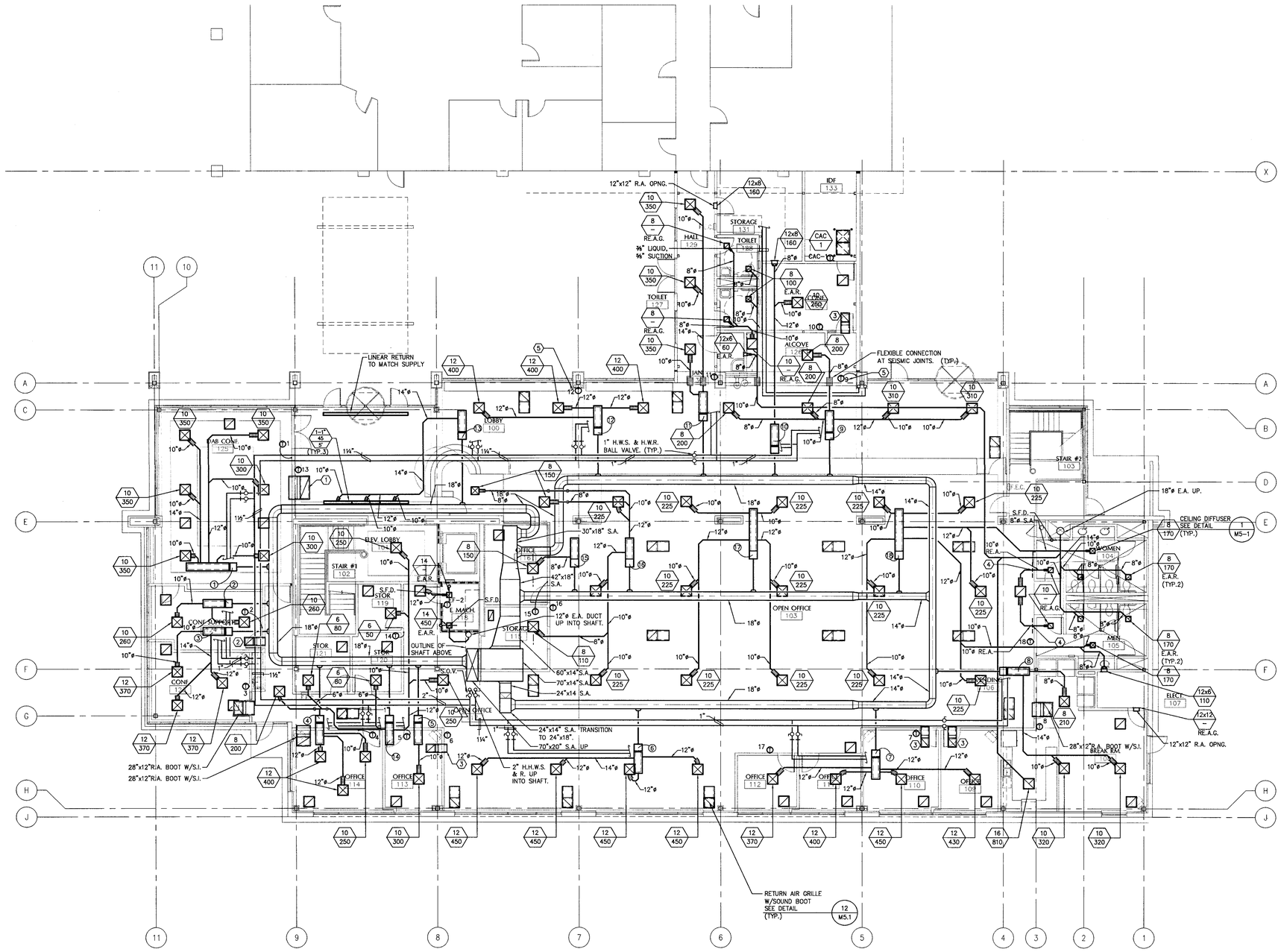

ZONE SCHEDULE

ZONE NO.	BOX SIZE	COLD AIR MAX.	COLD AIR MIN.	REMARKS
1	14	2000	600	EXTERIOR ZONE
2	8	530	160	EXTERIOR ZONE
3	10	1110	340	EXTERIOR ZONE
4	10	1050	320	EXTERIOR ZONE
5	6	300	90	EXTERIOR ZONE
6	14	1800	540	EXTERIOR ZONE
7	12	1650	500	EXTERIOR ZONE
8	10	850	260	EXTERIOR ZONE *
9	10	1220	370	EXTERIOR ZONE
10	8	420	130	EXTERIOR ZONE
11	10	1050	320	EXTERIOR ZONE *
12	10	1200	360	EXTERIOR ZONE
13	8	675	210	EXTERIOR ZONE
14	10	910	190	INTERIOR ZONE
15	6	150	30	INTERIOR ZONE
16	10	1085	220	INTERIOR ZONE
17	12	1350	270	INTERIOR ZONE
18	12	1690	340	INTERIOR ZONE

* PROVIDE 3-WAY CONTROL VALVE AT REHEAT COIL

KEYNOTES:

1. 48"x12" R.A. BOOT WITH S.I.
2. 14"x12" R.A. BOOT WITH S.I.
3. 12"x12" R.A. BOOT WITH S.I.
4. BACKDRAFT DAMPER
5. PROVIDE INSULATING PAD BEHIND THERMOSTAT MOUNTED AT EXTERIOR WALL.

APPROVED
MAY 0 1 2006
BUILDING & SAFETY
CITY OF FONTANA

LANGDON WILSON
ARCHITECTURE
PLANNING
INTERIORS

18800 VON KARMAN AVENUE, SUITE 200
IRVINE, CALIFORNIA 92612-1517
949 · 833 · 9193

STRUCTURAL
KPFF 949 · 252 · 1022
MECHANICAL
TKSC 949 · 756 · 0565
ELECTRICAL
GLP 714 · 751 · 3851
LANDSCAPE
FRANK RADMACHER 714 · 832 · 1774
CIVIL ENGINEER
IKE CONSULTING 714 · 241 · 0606
AUDIO / VISUAL
VENEKLASEN ASSOCIATES 310 · 450 · 1733
DATA TELEPHONE
PLANNET CONSULTING 714 · 982 · 5800

CITY OF FONTANA
DEVELOPMENT SERVICES
ORGANIZATION BUILDING
8353 SIERRA AVENUE FONTANA, CALIFORNIA

REV.	DATE	ISSUED FOR	REV.	DATE	ISSUED FOR
	4/17/06	PERMIT/BID			

Stamp

DATE: SCALE: 1/8"=1'-0"
DRAWN BY: -
JOB NO. CADD TITLE M2-1.dwg

SHEET TITLE
FIRST FLOOR MECHANICAL PLAN

SHEET NUMBER:
M2-1

© Copyright 2005 Langdon Wilson

PERMIT SET / BID SET 04-17-06

TKSC #05-175

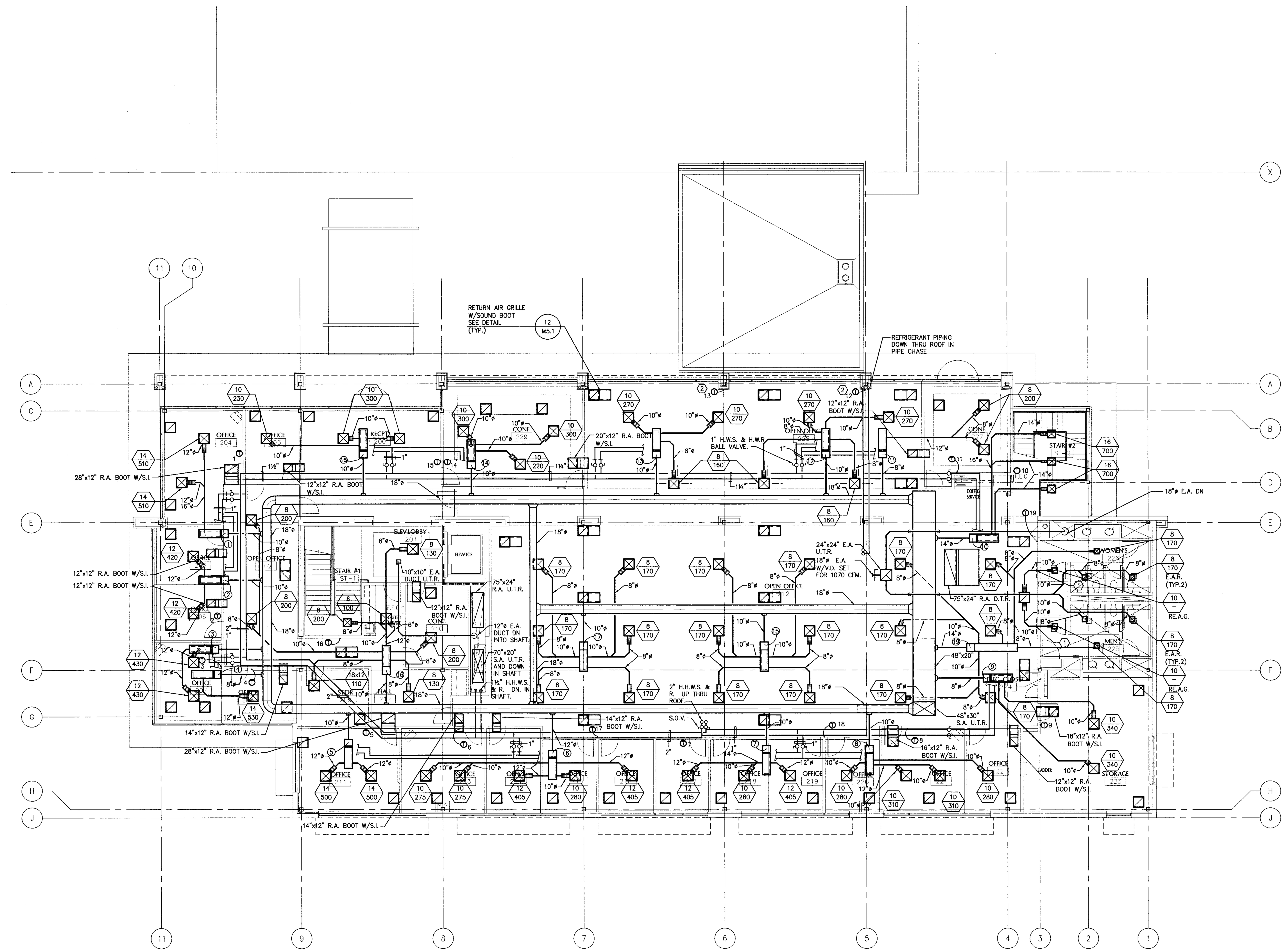

ZONE SCHEDULE

ZONE NO.	BOX SIZE	COLD AIR MAX.	COLD AIR MIN.	REMARKS
1	10	1020	310	EXTERIOR ZONE
2	10	840	250	EXTERIOR ZONE
3	10	860	260	EXTERIOR ZONE
4	8	530	160	EXTERIOR ZONE
5	10	1000	300	EXTERIOR ZONE
6	12	1660	500	EXTERIOR ZONE
7	10	1110	330	EXTERIOR ZONE
8	10	1180	350	EXTERIOR ZONE *
9	8	680	200	EXTERIOR ZONE
10	14	2100	630	EXTERIOR ZONE *
11	8	400	120	EXTERIOR ZONE
12	10	860	260	EXTERIOR ZONE
13	10	700	210	EXTERIOR ZONE
14	10	820	250	EXTERIOR ZONE
15	10	830	250	EXTERIOR ZONE
16	10	1270	260	INTERIOR ZONE
17	10	1020	200	INTERIOR ZONE
18	10	1020	200	INTERIOR ZONE
19	12	1360	270	INTERIOR ZONE

* PROVIDE 3-WAY CONTROL VALVE AT REHEAT COIL

KEYNOTES:

1. BACKDRAFT DAMPER
2. PROVIDE INSULATING PAD BEHIND THERMOSTAT MOUNTED AT EXTERIOR WALL.

APPROVED
MAY 0 1 2006
BUILDING & SAFETY
CITY OF FONTANA

WILLDAN

LANGDON WILSON
ARCHITECTURE
PLANNING
INTERIORS

18800 VON KARMAN AVENUE, SUITE 200
IRVINE, CALIFORNIA 92612-1517
949 - 833 - 9193

STRUCTURAL
KPFF 949 - 252 - 1022
MECHANICAL
TKSC 949 - 756 - 0565
ELECTRICAL
GLP 714 - 751 - 1851
LANDSCAPE
FRANK RADMACHER 714 - 832 - 1774
CIVIL ENGINEER
IKE CONSULTING 714 - 241 - 0606
AUDIO / VISUAL
VENEKLASEN ASSOCIATES 310 - 450 - 1733
DATA TELEPHONE
PLANNET CONSULTING 714 - 982 - 5800

CITY OF FONTANA
DEVELOPMENT SERVICES
ORGANIZATION BUILDING
8353 SIERRA AVENUE FONTANA, CALIFORNIA

CITY OF FONTANA CALIFORNIA

REV.	DATE	ISSUED FOR	REV.	DATE	ISSUED FOR
	4/17/06	PERMIT/BID			

Stamp

DATE: SCALE: 1/8"=1'-0"
DRAWN BY: -
JOB NO. CADD TITLE: M2-2.dwg
SHEET TITLE:
SECOND FLOOR MECHANICAL PLAN
SHEET NUMBER:
M2-2

© Copyright 2005 Langdon Wilson

PERMIT SET / BID SET 04-17-06

TKSC #05-175

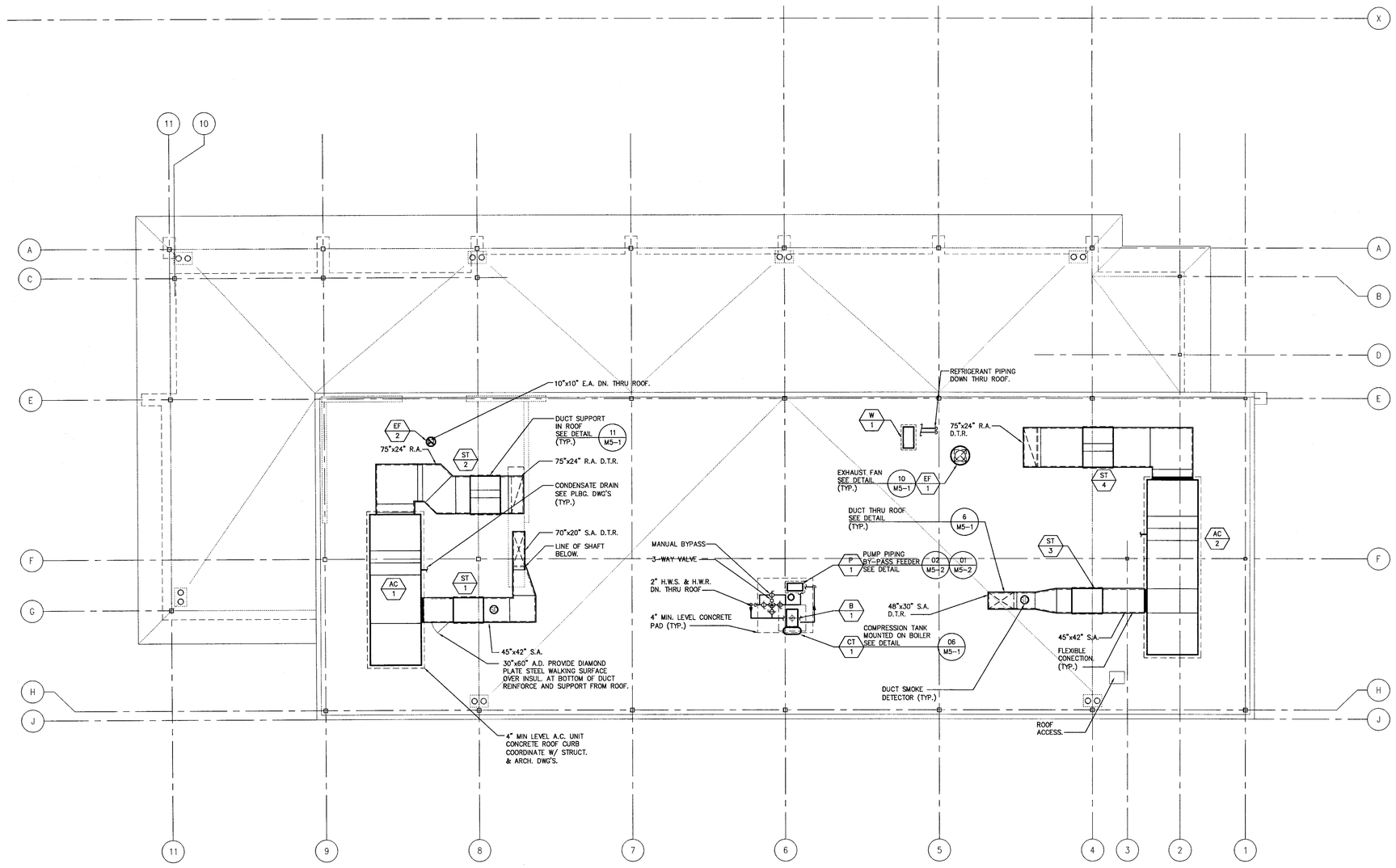

APPROVED
MAY 0 1 2006
BUILDING & SAFETY
CITY OF FONTANA

REVIEWED BY

LANGDON WILSON
ARCHITECTURE
PLANNING
INTERIORS

18800 VON KARMAN AVENUE, SUITE 200
IRVINE, CALIFORNIA 92612-1517
949 - 833 - 9193

STRUCTURAL
KPFF 949 - 252 - 1022
MECHANICAL
TKSC 949 - 756 - 0565
ELECTRICAL
GLP 714 - 751 - 1851
LANDSCAPE
FRANK RADMACHER 714 - 832 - 1774
CIVIL ENGINEER
IKE CONSULTING 714 - 241 - 0606
AUDIO / VISUAL
VENEKLASEN ASSOCIATES 310 - 450 - 1733
DATA TELEPHONE
PLANNET CONSULTING 714 - 982 - 5800

CITY OF FONTANA
DEVELOPMENT SERVICES ORGANIZATION BUILDING

8353 SIERRA AVENUE FONTANA, CALIFORNIA

REV.	DATE	ISSUED FOR	REV.	DATE	ISSUED FOR
	4/17/06	PERMIT/BID			

Stamp

DATE: SCALE: 1/8"=1'-0"
DRAWN BY: -
JOB NO. CADD TITLE: M2-3.dwg

SHEET TITLE:
ROOF PLAN

SHEET NUMBER:
M2-3

© Copyright 2005 Langdon Wilson

PERMIT SET / BID SET 04-17-06

TKSC #05-175

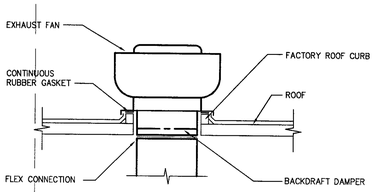

ROOF EXHAUST FAN | 10

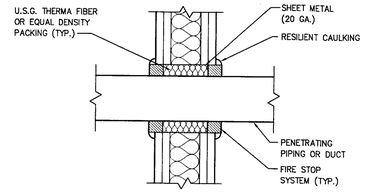

NOTE:
1. INDICATED INSTALLATION IS FOR DUCT OR PIPE PENETRATION THROUGH A NON REQUIRED FIRE RATED ASSEMBLY. FOR PIPE AND DUCT PENETRATIONS THROUGH A REQUIRED FIRE RATED ASSEMBLY. PROVIDE A U.L. LISTED INSTALLATION AS PROVIDED BY 3M FIRE PROTECTION PRODUCTS, HILTI OR EQUAL.
2. CENTER DUCT / PIPE IN OPENING AND KEEP SPACE CLEAR OF ANY FOREIGN MATERIAL.

DUCT OR PIPE THRU FULL HEIGHT WALL | 7

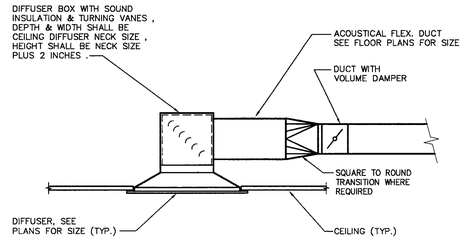

1. USE LOW HEIGHT INSTALLATION WHERE INSUFFICIENT CLEARANCE EXISTS FOR PROPER INSTALLATION PER DETAIL #1, THIS SHEET.
2. FOR ADDITIONAL INFORMATION, SEE DETAIL 1, THIS SHEET.
3. FLEXIBLE DUCT CONNECTIONS SHALL BE INTERNALLY LINED.
4. EXHAUST AIR REGISTERS SIMILAR WITH RIGID DUCT IN LIEU OF FLEX.

CEILING DIFFUSER LOW HEIGHT INSTALLATION | 4

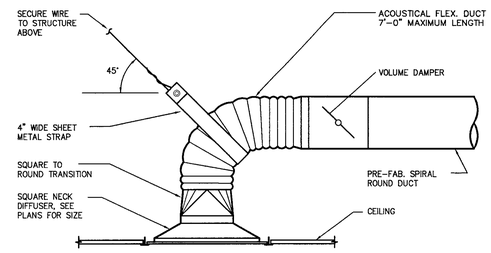

NOTES:
1. ALL FLEX. DUCT CONNECTIONS SHALL BE INTERNALLY LINED.
2. DUCTED RELIEF AND RETURN AIR REGISTERS SIMILAR.
3. EXHAUST AIR REGISTERS SHALL BE PROVIDED WITH HARD CONNECTION IN LIEU OF FLEX CONNECTION.

CEILING DIFFUSER | 1

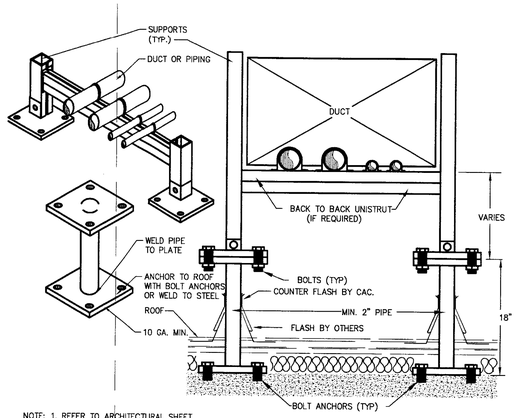

NOTE: 1. REFER TO ARCHITECTURAL SHEET A8.04 DETAILS 4 AND 12 FOR ADDITIONAL INFORMATION.
2. REFER TO S.M.A.C.N.A. FOR DUCT/PIPE SUPPORT SPACING REQUIREMENTS.

DUCT SUPPORT ON ROOF FOR BOUND OR RECTANGULAR DUCTS | 11

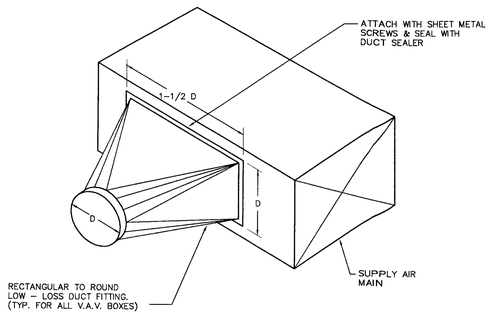

LOW LOSS FITTING | 8

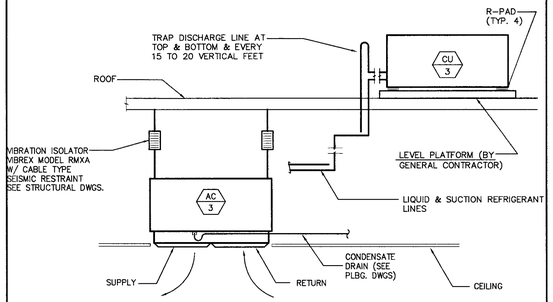

COMPUTER ROOF A.C. UNIT | 5

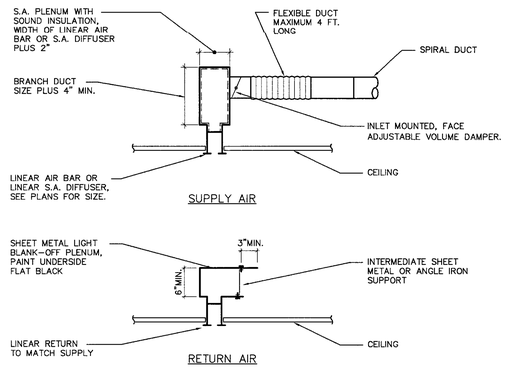

NOTES:
1. FOR EXACT MOUNTING AND INTEGRATION OF LINEAR AIR BAR / DIFFUSER INTO CEILING SYSTEM, SEE ARCH. DWGS.

LINEAR DIFFUSER | 2

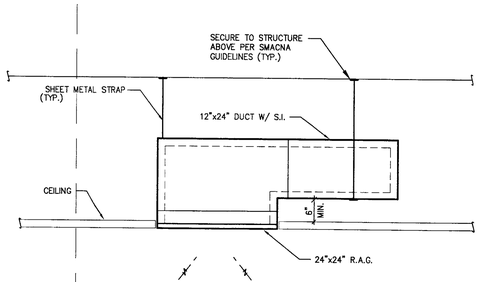

RETURN AIR BOOT OVER R.A. GRILLE | 12

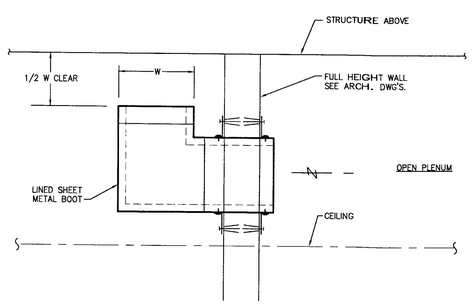

RETURN AIR BOOT W/S.I. | 9

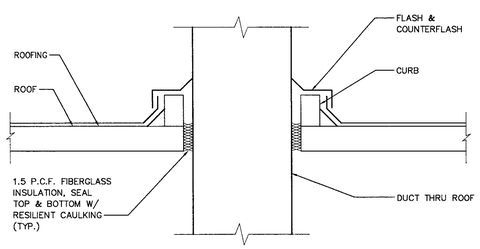

DUCT THRU ROOF | 6

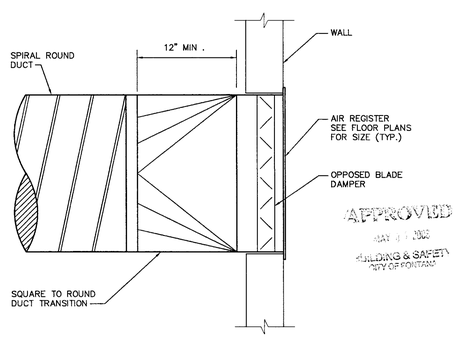

APPROVED
MAY 1 1 2006
BUILDING & SAFETY
CITY OF FONTANA

SIDEWALL REGISTER | 3

LANGDON WILSON
ARCHITECTURE
PLANNING
INTERIORS

18800 VON KARMAN AVENUE, SUITE 200
IRVINE, CALIFORNIA 92612-1517
949 - 833 - 9193

STRUCTURAL
KPFF 949 - 252 - 1022
MECHANICAL
TKSC 949 - 756 - 0565
ELECTRICAL
GLP 714 - 751 - 1851
LANDSCAPE
FRANK RADMACHER 714 - 832 - 1774
CIVIL ENGINEER
IKE CONSULTING 714 - 241 - 0606
AUDIO / VISUAL
VENEKLASEN ASSOCIATES 310 - 450 - 1733
DATA TELEPHONE
PLANNET CONSULTING 714 - 982 - 5800

CITY OF FONTANA
DEVELOPMENT SERVICES
ORGANIZATION BUILDING
8353 SIERRA AVENUE FONTANA, CALIFORNIA

REV.	DATE	ISSUED FOR	REV.	DATE	ISSUED FOR
	4/17/06	PERMIT/BID			

Stamp

DATE: SCALE: NONE
DRAWN BY: -
JOB NO. CADD TITLE: M5-1.dwg

SHEET TITLE:
DETAILS

SHEET NUMBER:
M5-1

© Copyright 2005 Langdon Wilson

PERMIT SET / BID SET 04-17-06

TKSC #05-175

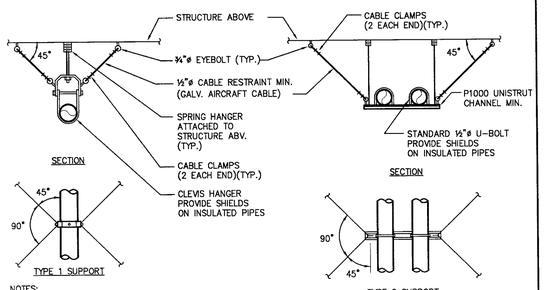

NOTES:

1. CABLE SIZE IS DETERMINED ASSUMING TOTAL LOAD ON ONE CABLE .
2. ANCHOR BOLTS ARE HILTI KWIK-BOLT CONCRETE INSERTS (OR EQUAL)
3. BOLT SIZE IS DETERMINED ASSUMING TOTAL LOAD ON ONE BOLT OR BOLT GROUP .
4. SIZES SHOWN ARE MINIMUM .
5. CABLE TO BE SLACK & ALLOW 7mm MOVEMENT BEFORE BECOMING TAUT .
6. TRAPEZE CHANNELS REQUIRE WEB STIFFENERS 7mm MINIMUM .
7. DESIGN GUIDELINES PER SMACNA AND AS APPROVED BY DSA/ORS FOR CMC 2001, APPENDIX 'A' REFERENCE TO SMACNA

REFER TO SECONDARY UNISTRUT FRAMING FOR CONDITION AT STEEL DECK 22/A7.6

–	10	HORIZONTAL PIPE SUPPORT	7

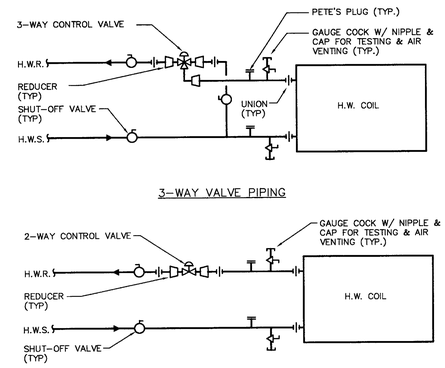

HOT WATER COIL PIPING	4

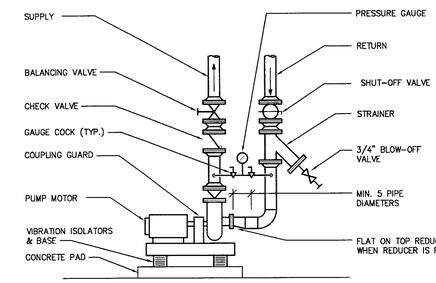

PUMP PIPING	1

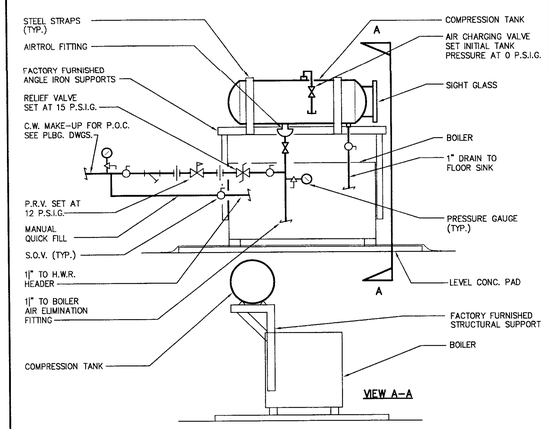

COMPRESSION TANK MOUNTING	5

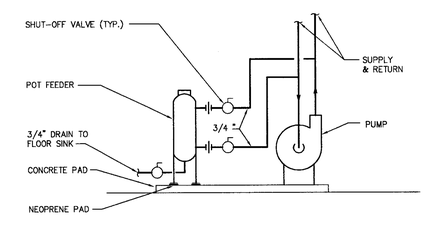

BY-PASS FEEDER	2

–	11	–	8

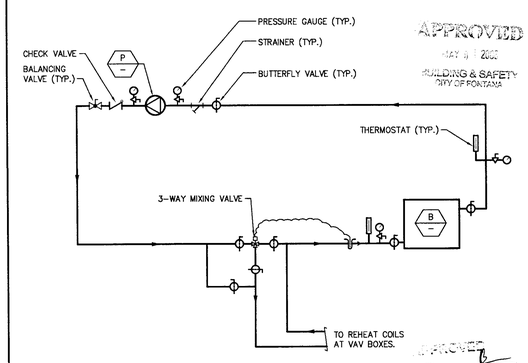

APPROVED
MAY 11 2006
BUILDING & SAFETY
CITY OF FONTANA

NOTE: MIXING VALVE TO MODULATE TO MAINTAIN MINIMUM HOT WATER RETURN TEMPERATURE TO BOILER, VERIFY WITH BOILER MANUFACTURER FOR PROPER SETTING.

APPROVED
APPROVED BY
DATE

HOT WATER FLOW DIAGRAM	3

–	12	–	9

LANGDON WILSON
ARCHITECTURE
PLANNING
INTERIORS

18800 VON KARMAN AVENUE, SUITE 200
IRVINE, CALIFORNIA 92612-1517
949 - 833 - 9193

STRUCTURAL
KPFF 949 - 252 - 1022
MECHANICAL
TKSC 949 - 756 - 0565
ELECTRICAL
GLP 714 - 751 - 1851
LANDSCAPE
FRANK RADMACHER 714 - 832 - 1774
CIVIL ENGINEER
IKE CONSULTING 714 - 241 - 0606
AUDIO / VISUAL
VENEKLASEN ASSOCIATES 310 - 450 - 1733
DATA TELEPHONE
PLANNET CONSULTING 714 - 982 - 5800

CITY OF FONTANA
DEVELOPMENT SERVICES
ORGANIZATION BUILDING

8353 SIERRA AVENUE FONTANA, CALIFORNIA

CITY OF FONTANA CALIFORNIA

REV.	DATE	ISSUED FOR	REV.	DATE	ISSUED FOR
	4/17/06	PERMIT/BID			

Stamp

PROFESSIONAL ENGINEER
JOHN D. TOLLE
No. M-18346
Exp. 12-31-06
MECHANICAL
STATE OF CALIFORNIA

DATE: SCALE: NONE
DRAWN BY: –
JOB NO. CADD TITLE M5-2.dwg

SHEET TITLE:
DETAILS

SHEET NUMBER:
M5-2

© Copyright 2005 Langdon Wilson

PERMIT SET / BID SET 04-17-06

TKSC #05-175

MARK	MAKE	MODEL	SIZE	L
--	PARKER	T	490LR	27±

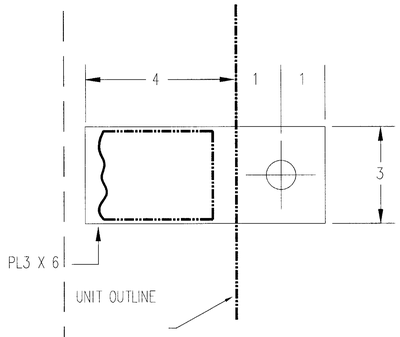

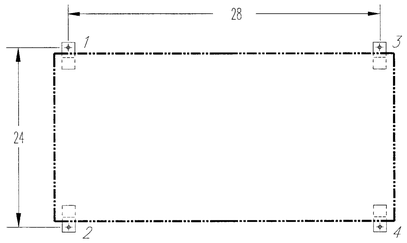

PLAN VIEW

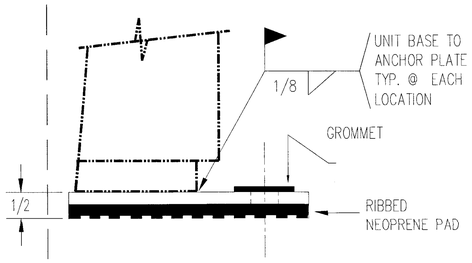

NOTES:

1. USE 1/2" DIA HKB3 ANCHORS, MIN 3-1/2" EMBEDMENT, MIN 5-1/4" CONC THCK'S, MIN 9" EDGE DISTANCE, IN MIN 3000 PSI HR CONCRETE. INSTALL PER ICBO ER-1385

BOILER, B-1 | 7

DETAIL - 1

NOTES:
1. FOR ADDITIONAL DETAILS, SEE ADDITIONAL DRAWINGS.
2. WHEN REQUIRED CURBS ARE PITCHED TO MATCH ROOF SLOPE

STATIC DEFLECTION: 2.0"
OPERATING HEIGHT: 19"

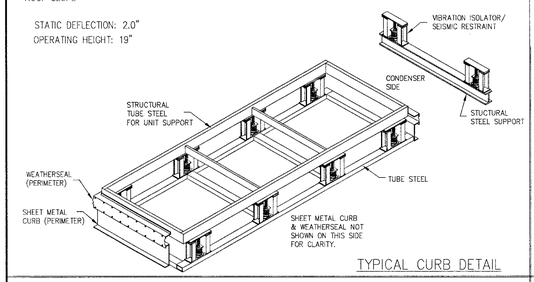

TYPICAL CURB DETAIL

DETAIL - 2

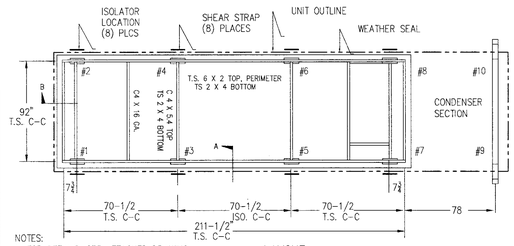

NOTES:
1. FOR DETAILS, SEE ATTACHED DRAWING.
2. APPROXIMATE WEIGHT: 2100 LBS
3. ANCHORAGE IS BY STRUCTURAL ENGINEER OF RECORD

LAYOUT

McQUAY RDT-050(AC-1)

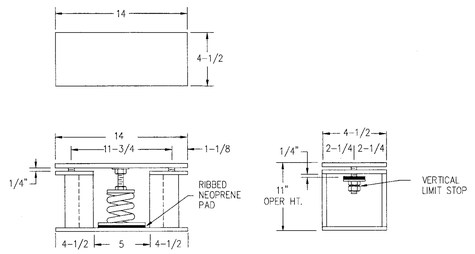

DETAIL - 3

DETAIL - 4

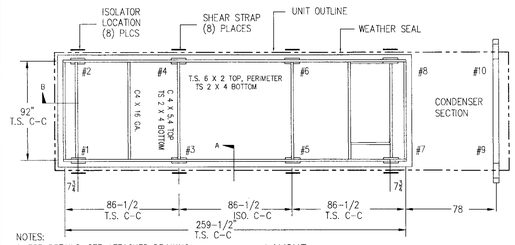

NOTES:
1. FOR DETAILS, SEE ATTACHED DRAWING.
2. APPROXIMATE WEIGHT: 2400 LBS
3. ANCHORAGE IS BY STRUCTURAL ENGINEER OF RECORD

LAYOUT

McQUAY RDT-050(AC-2)

ROOFTOP PACKAGED V.A.V. UNIT, AC-1 & AC-2 | 1

DETAIL - 1

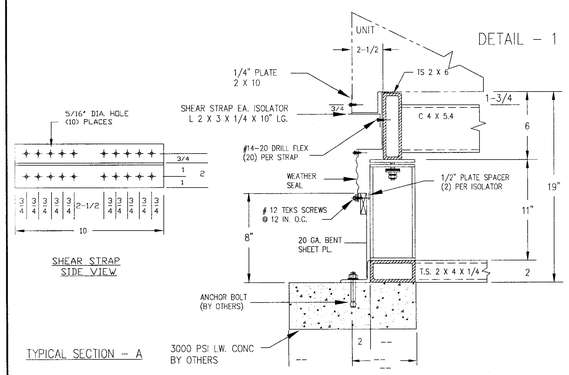

SHEAR STRAP SIDE VIEW

TYPICAL SECTION - A

DETAIL - 2

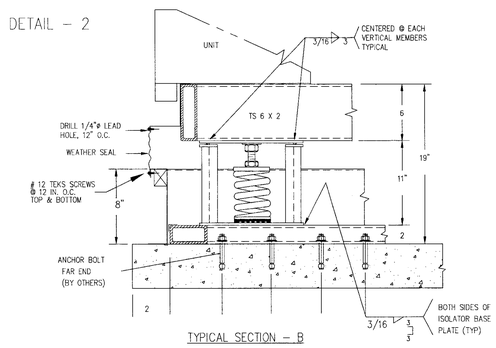

TYPICAL SECTION - B

APPROVED
MAY 11 2006
BUILDING & SAFETY
CITY OF FONTANA

REVIEWED BY

Approval of these plans shall not be construed to be a permit or approval of any violation of the provisions of the Uniform Codes or other ordinances of the City. This review shall not prevent the City from requiring the correction of errors in the plans, construction or violations of the Uniform Codes or other ordinances of the City.

-- | 9

ROOFTOP PACKAGED V.A.V. UNIT, AC-1 & AC-2 | 3

LANGDON WILSON
ARCHITECTURE
PLANNING
INTERIORS

18800 VON KARMAN AVENUE, SUITE 200
IRVINE, CALIFORNIA 92612-1517
949 - 833 - 9193

STRUCTURAL
KPFF 949 - 252 - 1022
MECHANICAL
TKSC 949 - 756 - 0565
ELECTRICAL
GLP 714 - 751 - 1851
LANDSCAPE
FRANK RADMACHER 714 - 832 - 1774
CIVIL ENGINEER
IKE CONSULTING 714 - 241 - 0606
AUDIO / VISUAL
VENEKLASEN ASSOCIATES 310 - 450 - 1733
DATA TELEPHONE
PLANNET CONSULTING 714 - 982 - 5800

CITY OF FONTANA
DEVELOPMENT SERVICES
ORGANIZATION BUILDING
8353 SIERRA AVENUE FONTANA, CALIFORNIA

REV.	DATE	ISSUED FOR	REV.	DATE	ISSUED FOR
	4/17/06	PERMIT/BID			

Stamp

DATE: SCALE: NONE
DRAWN BY: --
JOB NO. CADD TITLE M5-2.dwg

SHEET TITLE:
DETAILS FOR REFERENCE ONLY

SHEET NUMBER:
M5-3

© Copyright 2005 Langdon Wilson

PERMIT SET / BID SET 04-17-06

TKSC #05-175

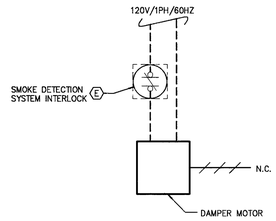

–	10	COMBINATION SMOKE & FIRE DAMPER WIRING	7	BOILER WIRING	4	WIRING LEGEND	1

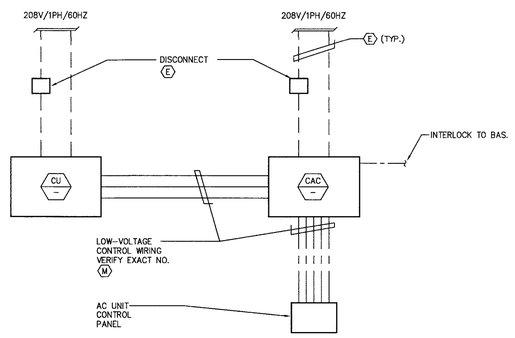

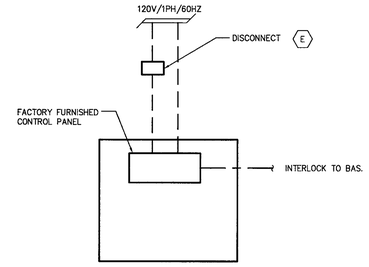

BAS	BUILDING AUTOMATION SYSTEM
————	120 V. CONTROL WIRING BY BMCS CONTRACTOR
- - - - -	WIRING BY ELECTRICAL CONTRACTOR.
— — —	PNEUMATIC TUBING
— - —	24 V. CONTROL WIRING BY BMCS CONTRACTOR.
— - —	LAN TRUNK
DDCC	DDC CONTROLLER
CSC	CENTRAL SYSTEM CONTROLLER
TEC	TERMINAL EQUIPMENT CONTROLLER
T.S.	TEMPERATURE SENSOR
H.S.	HUMIDITY SENSOR
P.S.	PRESSURE SENSOR
D.P.S.	DIFFERENTIAL PRESSURE SWITCH

–	11	COMPUTER ROOM AC UNIT WIRING	8	EXHAUST FAN WIRING	5	ROOFTOP PACKAGED V.A.V. UNIT WIRING	2

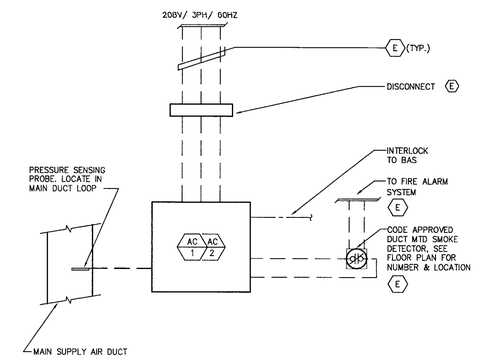

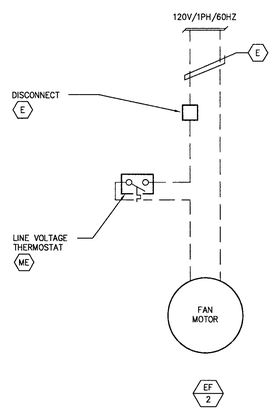

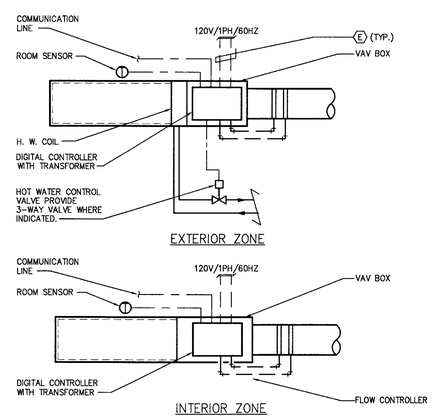

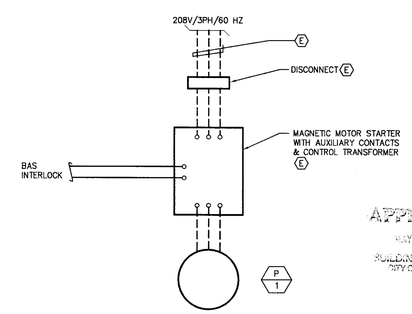

APPROVED
MAY 1 1 2006
BUILDING & SAFETY
CITY OF FONTANA

–	12	FAN WIRING	9	V.A.V. BOX CONTROL	6	PUMP WIRING	3

LANGDON WILSON
ARCHITECTURE
PLANNING
INTERIORS

18800 VON KARMAN AVENUE, SUITE 200
IRVINE, CALIFORNIA 92612-1517
949 - 833 - 9193

STRUCTURAL
KPFF 949 - 252 - 1022
MECHANICAL
TKSC 949 - 756 - 0565
ELECTRICAL
GLP 714 - 751 - 1851
LANDSCAPE
FRANK RADMACHER 714 - 832 - 1774
CIVIL ENGINEER
IKE CONSULTING 714 - 241 - 0606
AUDIO / VISUAL
VENEKLASEN ASSOCIATES 310 - 450 - 1733
DATA TELEPHONE
PLANNET CONSULTING 714 - 982 - 5800

CITY OF FONTANA
DEVELOPMENT SERVICES
ORGANIZATION BUILDING
8353 SIERRA AVENUE FONTANA, CALIFORNIA

REV.	DATE	ISSUED FOR	REV.	DATE	ISSUED FOR
	4/17/06	PERMIT/BID			

Stamp

DATE: SCALE: NONE
DRAWN BY: -
JOB NO: CADD TITLE: M6-1.dwg

SHEET TITLE:
WIRING

SHEET NUMBER:
M6-1

© Copyright 2005 Langdon Wilson

PERMIT SET / BID SET 04-17-06

TKSC #05-175

BUILDING AUTOMATION SYSTEM
POINTS SCHEDULE

EQUIPMENT DESCRIPTION	SYSTEM FEATURES – ALARMS: HIGH TEMPERATURE	LOW TEMPERATURE	FILTER PRESSURE DIF.	MAINTENANCE	STATIC PRESSURE	SMOKE DETECTOR	LOW LIMIT (ROOM HUMIDITY)	PROGRAMS: OPTIMUM START	WARM UP CYCLE	HIGH LIMIT (DUCT HUMIDITY)	ECONOMIZER CYCLE	NIGHT SETUP / SETBACK	DEMAND CONTROL VENTILATION	O.A. RESET
ROOFTOP PACKAGE V.A.V. UNIT														
AC-1, AC-2	X	X	X	X	X	X	X	X	X		X	X	X	X
EXHAUST FANS														
EF-1				X										
EF-2														
SPACE HEATING HOT WATER SYSTEM														
BOILER, B-1	X	X		X				X	X					X
PUMP P-1														
V.A.V. ZONE BOXES														
INTERIOR ZONES	X	X						X	X					
EXTERIOR ZONES	X	X						X	X					

EQUIPMENT DESCRIPTION	INPUTS – ANALOG – MEASURED: OUTDOOR TEMPERATURE	OUTDOOR HUMIDITY	S.A. TEMPERATURE	R.A. TEMPERATURE	SPACE TEMPERATURE	SUPPLY DUCT STATIC PRESSURE	SPACE STATIC PRESSURE	SPACE CO2 LEVEL	HWS TEMPERATURE	HWR TEMPERATURE	SPACE HUMIDITY	SPEED	SPEED, RA FAN	MOD. DAMPER / VALVE POSITION			FLOW RATE	FILTER D.P.S.	CALCULATED: C.O.2 SENSORS	RUN TIME	BTU / HR	KW. HRS.	AL.	DIGITAL: FLOW SWITCH	2 POSITION VALVE / DAMPER POSITION	CURRENT SENSOR	AIR FLOW SWITCH	RTU ALARM	BOILER ALARMS
ROOFTOP PACKAGE V.A.V. UNIT																													
AC-1, AC-2	X	X	X	X		X	X					X	X	X				X		X			X			X			
EXHAUST FANS																													
EF-1																				X						X			
EF-2																													
SPACE HEATING HOT WATER SYSTEM																													
BOILER, B-1	X								X	X										X						X			X
PUMP P-1																				X						X			
V.A.V. ZONE BOXES																													
INTERIOR ZONES			X		X									X															
EXTERIOR ZONES			X		X									X															

EQUIPMENT DESCRIPTION	OUTPUTS – DIGITAL: SYSTEM ENABLE	ON / OFF	2 POSITION DAMPER / VALVE	FAN STATUS	HIGH FIRE/LOW FIRE	OCCUPIED / UNOCCUPIED	D.O.	ANALOG: MOD. DAMPER / VALVE POSITION		SPEED (VSD), SA FAN	SPEED (VSD), RA FAN	SET POINT ADJUST, COLD PLENUM	SET POINT ADJUST			NOTES
ROOFTOP PACKAGE V.A.V. UNIT																
AC-1, AC-2	X	X		X		X				X	X	X	X			1
EXHAUST FANS																
EF-1	X	X		X												
EF-2																
SPACE HEATING HOT WATER SYSTEM																
BOILER, B-1		X			X							X				
PUMP P-1		X														2
V.A.V. ZONE BOXES																
INTERIOR ZONES	X	X						X					X			
EXTERIOR ZONES	X	X						X					X			

1 – DAMPER POSITIONS MONITORED BY BAS: O.A. DAMPER, R.A. DAMPER ; SET POINT ADJUSTMENTS AVAILABLE VIA BMCS: S.A. TEMPERATURE, S.A. STATIC PRESSURE.
2 – FLOW SWITCH SHALL BE DIFFERENTIAL PRESSURE TYPE.

POINT LIST 1

HVAC SEQUENCE OF OPERATION

A. GENERAL

1. ENVIRONMENTAL TEMPERATURE CONTROL SHALL BE PROVIDED BY A BUILDING AUTOMATION SYSTEM (BAS) UTILIZING DIRECT DIGITAL CONTROLS TECHNIQUES IN CONJUNCTION WITH ELECTRONIC CONTROL EQUIPMENT. THE BAS WILL BE ACCESSED THROUGH AN OPERATOR WORK STATION (OWS) LOCATED IN THE EXISTING CITY HALL.

2. THE OPERATOR, DEPENDING ON PASSWORD AND ACCESS LEVEL SHALL BE ABLE TO CREATE SCHEDULES AND MAKE CHANGES TO CONTROL POINTS THROUGH THE OPERATOR WORKSTATION (OWS). ENABLE THE HVAC SYSTEM TO OPERATE TOTALLY OR PARTIALLY BY DISCRETE TIME/DAY/DATE SCHEDULES AND OPTIMIZED WARM-UP OR COOL-DOWN MODES AS NOTED HEREIN. PROVIDE ALARM LIMITS FOR EACH ANALOG INPUT VALUE AND SYSTEM OFF-NORMAL CONDITION. ANNUNCIATE ALARMS AT THE OWS AND LOG THEM INTO THE ACCESS DATABASE INDEFINITELY. THE OWNER MAY ARCHIVE THE DATABASE FROM THE WORKSTATION AS NEED BE. SET UP CONTINUOUS HISTORY TRENDS FOR EACH INPUT GROUPED FOR EACH UNIQUE PROCESS.

B. ROOF TOP DX VAV PACKAGE UNIT AC-1 AND AC-2 CONTROL

1. THE BUILDING ENERGY MANAGEMENT SYSTEM WILL COMMUNICATE WITH THE ROOF TOP VAV PACKAGE UNIT VIA A BACNET OVER MSTP CONNECTION. ALL READ AND WRITE POINTS WILL BE MAPPED INTO THE BUILDING ENERGY MANAGEMENT SYSTEM AND SHOWN GRAPHICALLY ON THE OWS.

C. MORNING WARM-UP CYCLE:

1. ONCE THE VAV ROOF TOP PACKAGE UNIT HAS BEEN ENABLED BY EITHER THE BUILDING OCCUPANCY SCHEDULE OR THE VAV ZONE OPTIMAL START/STOP PROGRAM, A WARM-UP CYCLE WILL BE INITIATED IF THE RETURN AIR TEMPERATURE IS BELOW 68°F (ADJUSTABLE). THE BUILDING ENERGY MANAGEMENT SYSTEM WILL COMMAND THE VAV ROOF TOP UNIT TO ACTIVATE IN THE WARM-UP MODE. DURING THE WARM-UP MODE, THE VAV UNIT WILL ONLY RE-CIRCULATE AIR AT THE COMMANDED DUCT STATIC PRESSURE SET POINT. THE UNIT OUTSIDE AIR DAMPER WILL BE CLOSED AND ALL COOLING WILL BE OFF.

2. EXHAUST FAN EF-1 SHALL BE OFF DURING THE WARM-UP CYCLE.

3. THE BUILDING BAS SYSTEM WILL ABORT THE MORNING WARM-UP CYCLE WHEN THE VAV PACKAGE UNITS RETURN AIR TEMPERATURE RISES ABOVE THE WARM-UP TEMPERATURE SET POINT PLUS .5 DEGREES (ADJUSTABLE) OR WHEN THE BUILDING OCCUPANCY SCHEDULE COMMENCES. THIS WILL INSURE THAT EXHAUST FAN EF-1 IS RUNNING AND THAT THE PROPER AMOUNT OF MINIMUM OUTSIDE AIRFLOW IS AVAILABLE ONCE THE BUILDING BECOMES OCCUPIED.

4. ONCE THE WARM-UP CYCLE HAS BEEN TERMINATED, THE VAV PACKAGE UNIT WILL BE COMMANDED TO THE COOLING MODE. THE MORNING WARM-UP CYCLE WILL BE ABORTED IF THE SYSTEM IS RUNNING DUE TO AN AFTER HOUR OVERRIDE COMMAND.

D. COOLING MODE

1. **FAN VOLUME CONTROL:** THE BUILDING BAS SYSTEM WILL TRANSMIT A SUPPLY DUCT STATIC PRESSURE SET POINT BASED ON THE VAV ZONE "NEED MORE STATIC" REQUIREMENT. ON INITIAL START-UP, THE DUCT STATIC PRESSURE SET POINT WILL BE 1.3 INCH WG. IF A NEED MORE STATIC SIGNAL IS RECEIVED FROM THE VAV ZONES, THE DUCT STATIC PRESSURE SET POINT WILL BE RESET UP TO A MAXIMUM OF 1.7 INCH WG (ADJUSTABLE) AT A RATE OF .05 INCH WG EVERY 5 MINUTES (ADJUSTABLE) UNTIL THE NEED MORE STATIC REQUEST STOPS. ONCE THE NEED MORE STATIC SIGNAL STOPS, THE DUCT STATIC PRESSURE SET POINT WILL HOLD AT THE SET POINT IT WAS AT WHEN THE SIGNAL STOPPED. AFTER 30 MINUTES HAS ELAPSED WITH NO FURTHER SIGNAL DETECTED, THE DUCT STATIC PRESSURE SET POINT WILL BE RAMPED DOWN TO A MINIMUM OF 1.3 INCH WG AT A RATE OF .05 INCH WG EVERY 5 MINUTES (ADJUSTABLE) UNLESS A NEED MORE STATIC SIGNAL IS RECEIVED.

2. **DISCHARGE TEMPERATURE CONTROL:** THE BUILDING BAS SYSTEM WILL TRANSMIT A SUPPLY DUCT TEMPERATURE SET POINT BASED ON AN OPTIMIZED VAV ZONE-COOLING REQUIREMENT. ON INITIAL START-UP IN THE COOLING MODE, THE SUPPLY DUCT TEMPERATURE SET POINT WILL BE 60 DEGREES (ADJUSTABLE). AS A REQUIREMENT FOR ADDITIONAL COOLING IS RECEIVED FROM THE VAV ZONES, THE SUPPLY DUCT TEMPERATURE WILL BE RESET DOWN AT A RATE OF .25 DEGREES EVERY 2 MINUTES TO A MINIMUM OF 55 DEGREES (ADJUSTABLE) UNTIL THE REQUIREMENT FOR ADDITIONAL COOLING STOPS. ONCE THE REQUIREMENT FOR ADDITIONAL COOLING STOPS, THE SUPPLY DUCT TEMPERATURE SET POINT WILL HOLD AT THE SET POINT IT WAS AT WHEN THE SIGNAL STOPPED. AFTER 30 MINUTES HAS ELAPSED WITH NO FURTHER COOLING REQUIREMENT SIGNAL DETECTED, THE SUPPLY DUCT TEMPERATURE SET POINT WILL BE RAMPED UP .25 DEGREES EVERY 2 MINUTES TO A MAXIMUM OF 65 DEGREES (ADJUSTABLE) UNLESS A REQUIREMENT FOR ADDITIONAL COOLING FROM THE VAV ZONES IS RECEIVED.

3. **BUILDING PRESSURE CONTROL:** THE BUILDING BAS SYSTEM WILL TRANSMIT A BUILDING PRESSURE SET POINT OF .02 INCHWG (ADJUSTABLE) TO THE ROOF TOP VAV PACKAGE UNIT TO INSURE PROPER BUILDING PRESSURE DURING THE COOLING MODE.

4. **ECONOMIZER CONTROL:** BASED ON A COMPARISON BETWEEN RETURN AIR AND OUTSIDE AIR ENTHALPY, 0-100% ECONOMIZER OPERATION SHALL BE PROVIDED THROUGH CONTROL OF THE RETURN AIR DAMPER, OUTSIDE AIR DAMPER, AND RETURN FAN SPEED.

E. HEATING SYSTEM CONTROL

1. **GENERAL PROVISIONS**

A. SPACE HEATING HOT WATER IS PROVIDED BY REHEAT COILS THROUGH A GAS-FIRED BOILER AND HOT WATER PUMP.

B. MAKE PROVISIONS FOR MANUALLY ENABLING OR DISABLING THE HEATING WATER SYSTEM AT THE OWS. WHEN UNDER AUTOMATIC CONTROL, ENABLE THE HEATING SYSTEM WHEN THE HIGHEST REFERENCED ZONE HEATING DEMAND SIGNAL IS GREATER THAN 10% AND THE OUTSIDE AIR TEMPERATURE (OAT) IS NOT ABOVE THE OAT HEATING LOCKOUT SET POINT OF 78 DEGREES (ADJUSTABLE). DISABLE HEATING WHEN THE HIGHEST REFERENCED HEATING ZONE DEMAND IS LESS THAN 2% HEATING SIGNAL OR THE OAT IS GREATER THAN THE HEATING LOCKOUT SET POINT.

2. **HOT WATER PUMP P-1:**

A. THE BUILDING BAS SYSTEM WILL START THE HOT WATER PUMP WHEN THE HEATING SYSTEM IS ENABLED. THE PUMP STATUS WILL BE MONITORED AND AN ALARM WILL BE SENT TO THE OWS IF THE PUMP FAILS TO PROVE STATUS.

B. WHEN THE HEATING SYSTEM IS DISABLED, THE HOT WATER PUMPS WILL CONTINUE TO RUN FOR 30 MINUTES (ADJUSTABLE) AFTER THE BOILER HAS BEEN DISABLED TO PURGE THE RESIDUAL HEAT FROM THE BOILER.

3. **HOT WATER BOILER B-1:**

A. ONCE PROOF OF THE HOT WATER PUMP HAS BEEN ESTABLISHED, THE BOILER WILL BE ENABLED.

B. THE BUILDING BAS SYSTEM WILL CONTROL THE BOILER STAGES TO MAINTAIN A HOT WATER SUPPLY TEMPERATURE SET POINT BASED ON A 3-WAY VALVE AND AN OUTSIDE AIR TEMPERATURE RESET SCHEDULE OF 40 TO 80 DEGREES OUTSIDE AIR TEMPERATURE TO 180 TO 130 DEGREES HOT WATER SUPPLY TEMPERATURE. (ADJUSTABLE)

C. 3-WAY CONTROL VALVE SHALL BE CONTROLLED BY TEMPERATURE SENSOR LOCATED IN MAIN HEATING HOT WATER RETURN PIPING TO MAINTAIN MINIMUM HEATING HOT WATER RETURN TEMPERATURE ENTERING THE BOILER.

H.W.S. TEMPERATURE SHALL BE RESET BASED ON OUTSIDE AIR TEMPERATURE THROUGH THE BOILER INTERNAL CONTROLS. THE LOWER AND UPPER UNITS OF THE H.W.S. TEMPERATURE FROM THE BOILERS SHALL BE AS FOLLOWS (CONTROL POINT SHALL BE ADJUSTABLE).

OA TEMP.	SA TEMP.
50	190
60	170

D. THE BUILDING BAS SYSTEM WILL MONITOR THE BOILER ALARM STATUS CONTACT AND GENERATE AN ALARM TO THE OWS.

F. VAV ZONE CONTROL

1. **OCCUPIED MODE CONTROL AND SPACE TEMPERATURE ALARMS**

A. ACTIVATE THE OCCUPIED MODE WHEN A SCHEDULED TIME COMMAND IS ON OR WHEN THE OCCUPANT HAS INITIATED AN AFTER-HOURS OVERRIDE BY PUSHING THE OVERRIDE BUTTON ON THE ROOM TEMPERATURE SENSOR. THE AFTER HOURS ENABLE AND OVERRIDE TIME PERIOD SHALL BE ADJUSTABLE FROM THE OWS. DEFAULT TO THE UN-OCCUPIED MODE IF DATA COMMUNICATION IS NOT DETECTED WITHIN 30 SECONDS AFTER POWER-UP, OR IF COMMUNICATION IS LOST FOR MORE THAN 5 MINUTES. ACTIVATE THE OCCUPIED MODE WHEN AN OPTIMIZED WARM-UP SEQUENCE IS ACTIVE. EACH VAV ZONE WILL REQUEST THE VAV UNIT, WHEN IN THE OCCUPIED MODE, OPTIMIZED WARM-UP MODE OR AFTER HOUR OVERRIDE MODE.

B. A "BAD SPACE SENSOR" ALARM IS ACTIVATED IF THE ROOM TEMPERATURE SENSOR INDICATES A TEMPERATURE GREATER THAN 85°F OR LESS THAN 50°F FOR 8 SECONDS.

C. AFTER THE ZONE HAS BEEN IN THE OCCUPIED MODE FOR AT LEAST 2 HOURS (ADJUSTABLE), "SPACE TOO WARM" OR "SPACE TOO COLD" TRIGGER ALARMS IF THE ROOM TEMPERATURE STAYS MORE THAN 3°F ABOVE THE CURRENT COOLING SETPOINT OR MORE THAN 3°F BELOW THE CURRENT HEATING SETPOINT, RESPECTIVELY.

D. UPON REACHING THE END OF THE SCHEDULED PROGRAM DAY, CHANGE EACH ZONE FROM OCCUPIED TO THE UN-OCCUPIED SETBACK MODE WITH HEATING SET FOR 55°F AND COOLING SET FOR 85°F (BOTH ADJUSTABLE).

2. **AFTER HOURS OPERATION:** OPERATION IS THE SAME AS IN THE OCCUPIED MODE. PROVIDE THE ABILITY FOR THE OPERATOR TO PROGRAM IN A DESIRED TIME SPAN IN INCREMENTS OF 30 MINUTES, ACCUMULATING UP TO THREE HOURS MAXIMUM (ADJUSTABLE). WHEN ENTERING AFTER-HOURS OPERATIONAL MODE, COORDINATE ZONE GROUPS AS INDICATED HEREIN AND/OR AS DIRECTED BY THE OPERATOR.

3. **HEATING AND COOLING SETPOINT:** DURING THE OCCUPIED MODE, THE ZONE CONTROLLER WILL OPERATE AT THE OCCUPIED HEATING SET POINT OF 71 DEGREES (ADJUSTABLE) AND THE OCCUPIED COOLING SET POINT OF 73 DEGREES (ADJUSTABLE). PERMIT THESE SET POINTS TO FLOAT BASED ON A SINGLE OCCUPANT SPACE TEMPERATURE SETPOINT ADJUSTMENT AT THE ROOM SENSORS SO THAT THE OCCUPANT ENTERS ONLY ONE SPACE TEMPERATURE SETPOINT ADJUSTMENT AND THE CONTROLLER AUTOMATICALLY ADJUSTS THE PROGRAMMED DEAD BANDS AND OFFSETS ACCORDINGLY FOR COORDINATED OPERATION IN EACH MODE. THE AMOUNT OF SET POINT ADJUSTMENT IS 2 DEGREES (ADJUSTABLE FROM THE OWS).

4. **HEATING AND COOLING SYSTEM RESOURCE DEMAND SIGNALS:** GENERATE HEATING AND COOLING DEMAND SIGNALS FROM THE CURRENT HEATING LOOP, AND COOLING LOOP CONTROL OUTPUTS. COMPARE THE TWO SIGNALS AND SET THE SMALLER ONE TO ZERO TO PREVENT SIMULTANEOUS HEATING AND COOLING DEMANDS FROM ONE ZONE. THE COOLING DEMAND SHALL BE TRANSMITTED FROM EACH VAV ZONE IN THE SYSTEM TO THE VAV AIR HANDLER CONTROL TO OPTIMIZE THE DISCHARGE AIR TEMPERATURE COOLING SET POINT. THE HEATING DEMAND SHALL BE TRANSMITTED TO THE HEATING HOT WATER CONTROL TO OPTIMIZE THE HOT WATER SUPPLY TEMPERATURE SET POINT.

5. **VAV EXTERIOR RE-HEAT ZONE TERMINAL MODES**

A. WHEN AN EXTERIOR RE-HEAT VAV ZONE TERMINAL UNIT IS COMMANDED TO THE OCCUPIED MODE, RESET THE AIRFLOW BETWEEN THE FOLLOWING LIMITS (HEAT MODE INDICATES ZONE WAS LAST IN A HEATING CYCLE)(COOL MODE INDICATES ZONE WAS LAST IN A COOLING CYCLE):

COOL MODE / COOLING FROM 0 TO 100% = OCCUPIED MINIMUM COOLING AIRFLOW LIMIT (SEE VAV ZONE SCHEDULE) TO SPECIFIED MAXIMUM COOLING AIRFLOW LIMIT.
HEAT MODE / HEATING FROM 0 TO 100% = OCCUPIED MINIMUM HEATING AIRFLOW LIMIT (SEE VAV ZONE SCHEDULE) TO SPECIFIED MAXIMUM HEATING AIRFLOW LIMIT.

B. IN THE HEATING MODE, THE VAV ZONE CONTROLLER WILL MODULATE THE ZONE REHEAT VALVE FROM 0% TO 100% OPEN TO MEET THE ZONE HEATING SET POINT. IT WILL MAINTAIN THE HEATING MINIMUM AIRFLOW UNTIL ITS DISCHARGE AIR TEMPERATURE SENSOR LOCATED IN THE DISCHARGE PLENUM AFTER THE RE-HEAT COIL INDICATES THAT THE ZONE SUPPLY AIR TEMPERATURE IS AT LEAST 3 DEGREES ABOVE THE SPACE TEMPERATURE. ONCE THE DISCHARGE TEMPERATURE SENSOR INDICATES THAT HEAT IS AVAILABLE TO THE RE-HEAT COIL, THE CONTROLLER WILL VARY THE AIRFLOW BETWEEN THE OCCUPIED MINIMUM HEATING AIRFLOW AND THE OCCUPIED MAXIMUM AIRFLOW LIMITS. THIS WILL PREVENT OVER COOLING IN THE OCCUPIED SPACE SHOULD HEAT NOT BE AVAILABLE TO THE RE-HEAT VAV ZONE TERMINAL.

6. **AIR VELOCITY (FLOW) CONTROL**

A. THE BAS SHALL MODULATE THE VAV DAMPER TO ACHIEVE THE DESIRED AIRFLOW AS SENSED AT THE TERMINAL INPUT FLOW ELEMENT. TO PREVENT HUNTING, THE CONTROLLER WILL STOP MODULATING THE DAMPER WHEN THE ACTUAL AIRFLOW IS WITHIN 3% OF THE DEMANDED AIRFLOW SET POINT. THE CONTROLLER WILL MONITOR THE DAMPER MOVEMENTS AND CORRECT ITS TUNING PARAMETERS AS REQUIRED TO PREVENT CYCLICAL HUNTING.

B. THE VAV ZONE CONTROLLER SOFTWARE WILL PROVIDE MANUAL COMMANDS TO FORCE THE AIRFLOW ALGORITHM TO THE MINIMUM, MAXIMUM OR REHEAT FLOW VALUES. MANUAL COMMANDS WILL BE PROVIDED TO FORCE THE DAMPER TO ANY POSITION FROM 0 TO 100% OPEN INDEPENDENTLY OF THE FLOW CONTROL ALGORITHM FOR TESTING PURPOSES.

7. **NEED MORE STATIC PRESSURE SIGNAL:** WHEN THE AIR CONTROL DAMPER IS WIDE OPEN AND THE ACTUAL AIRFLOW IS LESS THAN THE REQUIRED AIRFLOW, GENERATE A "NEED MORE STATIC" SIGNAL. VARY THIS SIGNAL IN PROPORTION TO THE DIFFERENCE BETWEEN THE ACTUAL AND REQUIRED AIRFLOWS AND USE IT TO RESET THE SUPPLY FAN DISCHARGE STATIC PRESSURE SLOWLY UPWARD UNTIL THE ACTUAL ZONE AIRFLOW IS WITHIN 3% OF THE REQUIRED AIRFLOW WHERE THE RESET WILL STOP.

8. **AFTER HOUR ZONE GROUPS:** ESTABLISH COMMON AREA AFTER HOUR ZONE GROUPS THAT COME ON AND OFF TOGETHER WITH A ZONE REQUEST FOR AFTER HOURS COOLING OR HEATING. ENSURE DISCRIMINATION BETWEEN HEATING AND COOLING COMMANDS WHEN EXECUTING AFTER HOURS SERVICES REQUESTS SO THAT SIMULTANEOUS HEATING AND COOLING IS PRECLUDED RIGHT AT STARTUP INSOFAR AS POSSIBLE. COMMON AREA ZONE GROUPS INCLUDE RESTROOMS, CORRIDORS, LUNCH ROOMS, COPY ROOMS, LOBBIES AND THE LIKE, SERVED FROM THE RESPECTIVE AIR HANDLING SYSTEM THAT CAN BE USED TO MAKE UP A MINIMUM OPERATING LOAD FOR THE VAV UNIT.

9. **VAV ZONE OPTIMIZED WARM-UP MODE:** EACH VAV ZONE CONTROLLER WILL CONTAIN A SELF-ADAPTIVE OPTIMUM START/STOP ROUTINE, WHICH WILL MONITOR THE MINUTES PRIOR TO GOING OCCUPIED FROM ITS SCHEDULE TIME CLOCK. AN OPTIMUM START/STOP FEATURE WILL INHIBIT THE ROUTINE UNTIL THE MINUTES PRIOR TO OCCUPANCY ARE LESS THAN 60 MINUTES (ADJUSTABLE). ONCE THE MINUTES PRIOR TO OCCUPANCY ARE LESS THAN 60 MINUTES, THE OPTIMUM START/STOP ROUTINE WILL MONITOR THE SPACE TEMPERATURE AND OUTSIDE AIR TEMPERATURE TO COMPARE THEM TO THE HEATING CAPACITY OF THE VAV ZONE AND RESET THE UN-OCCUPIED HEATING SET POINT UP TOWARD THE OCCUPIED HEATING SET POINT BASED ON THE RESULT OF THIS CALCULATION. WHEN THE ADJUSTED HEATING SET POINT EXCEEDS THE SPACE TEMPERATURE, THE VAV ZONE WILL BECOME ACTIVE IN THE OPTIMUM START-HEATING MODE. A REQUEST WILL BE TRANSMITTED TO THE VAV UNIT AND HEATING HOT WATER SYSTEM TO START. THE ZONE CONTROLLER WILL MONITOR THE SPACE TEMPERATURE AND HEATING SET POINT AT OCCUPANCY AND WILL COMPARE THEM TO THE OUTSIDE AIR CONDITIONS TO AUTOMATICALLY ADJUST THE NEXT DAYS OPTIMUM START/STOP SETTINGS TO ACHIEVE THE OCCUPIED SPACE HEATING TEMPERATURE AT OCCUPANCY.

G. EXHAUST FANS

1. EF-1: THE BUILDING BAS SYSTEM WILL START THE BUILDING EXHAUST FAN EF-1 WHEN THE SYSTEM IS IN THE OCCUPIED MODE OR AFTER HOUR OVERRIDE. IT WILL BE OFF DURING THE UN-OCCUPIED MODE AND MORNING WARM-UP CYCLE. THE FAN STATUS WILL BE MONITORED AND AN ALARM WILL BE SENT TO THE OWS IF THE FAN FAILS TO PROVE STATUS.

2. EF-2: THE ELEVATOR MACHINE ROOM EXHAUST FAN EF-2 WILL BE STARTED BY A LOCAL HARD WIRED WALL MOUNTED LINE VOLTAGE THERMOSTAT SET AT 80 DEGREES (ADJUSTABLE LOCALLY).

APPROVED
MAY 1 1 2006
BUILDING & SAFETY
CITY OF FONTANA

SEQUENCE OF OPERATIONS 2

LANGDON WILSON
ARCHITECTURE
PLANNING
INTERIORS

18800 VON KARMAN AVENUE, SUITE 200
IRVINE, CALIFORNIA 92612-1517
949 - 833 - 9193

STRUCTURAL
KPFF 949 - 252 - 1022
MECHANICAL
TKSC 949 - 756 - 0565
ELECTRICAL
GLP 714 - 751 - 1851
LANDSCAPE
FRANK RADMACHER 714 - 832 - 1774
CIVIL ENGINEER
IKE CONSULTING 714 - 241 - 0606
AUDIO / VISUAL
VENEKLASEN ASSOCIATES 310 - 450 - 1733
DATA TELEPHONE
PLANNET CONSULTING 714 - 982 - 5800

CITY OF FONTANA
DEVELOPMENT SERVICES
ORGANIZATION BUILDING

8353 SIERRA AVENUE FONTANA, CALIFORNIA

REV.	DATE	ISSUED FOR	REV.	DATE	ISSUED FOR
	4/17/06	PERMIT/BID			

Stamp

DATE:
SCALE: NONE
DRAWN BY: –
JOB NO.:
CADD TITLE M6-2.dwg

SHEET TITLE:
CONTROLS

SHEET NUMBER:
M6-2

© Copyright 2005 Langdon Wilson

PERMIT SET / BID SET 04-17-06

TKSC #05-175

ELECTRIC WATER HEATER

UNIT NO.	MANUFACTURER & MODEL NO.	LOCATION	SERVICE	STORAGE CAPACITY	REC @ 60° ΔT (GPH)	INLET TEMP °F	OUTLET TEMP °F	ELECTRICAL KW	V	PH	HZ	OPER. WT. (LBS.)	REMARKS
WH 1	A.O SMITH DEL-66	JANITOR CLOSET	DOMESTIC HOT WATER	66 GAL.	31	60	120	4.5	480	1	60	725	SEE DETAIL 3/P5-1

PUMPS

UNIT NO.	MANUFACTURER & MODEL NO.	LOCATION	SERVICE	TYPE	GPM	TDH FT	MOTOR HP	RPM	V	PH	HZ	OPER. WT. LBS.	REMARKS
CP 1	BELL & GOSSETT SERIES 100	JANITOR CLOSET	HOT WATER RETURN	IN-LINE	5	5	1/12	3450	115	1	60	20	SEE DETAIL 4/P5-1

COLD WATER PIPE SIZING SCHEDULE

(BASED ON 6 PSI / 100 FT. OR 8 FT. PER SEC.)

SIZE	FIXTURE UNITS FLUSH TANK	FIXTURE UNITS FLUSH VALVE	VELOCITY (FPS)	G.P.M.
½	1	0	3.6	2.6
¾	8	0	4.7	7.0
1	21	0	5.7	15
1¼	42	8	6.6	25
1½	83	26	7.6	39
2	284	158	8.0	82
2½	479	365	8.0	120

WATER SYSTEM CALCULATION

STREET PRESSURE – 83 P.S.I.

PRESSURE AT OUTLET OF REGULATING VALVE – 75 P.S.I.

TOTAL FIXTURE UNITS= 109 FIXTURE UNITS = 71 GPM

LOSSES:

RESIDUAL FIXTURE – 30 P.S.I.

FALL-OFF THRU PRV @ 71 GPM – 10 P.S.I.

STATIC LOSS (21' x .433) – 9.1 P.S.I.

TOTAL – 49.1 P.S.I.

PRESSURE AVAILABLE FOR FRICTION LOSS (75 – 49.1) – 25.9 P.S.I.

TOTAL EQUIVALENT LENGTH OF RUN FROM P.R.V. TO RESIDUAL FIXTURE – 200'

ALLOWABLE AVERAGE LOSS DUE TO FRICTION PER 100' OF PIPE $\frac{(29.1 \times 100')}{200'}$ – 14.55

PIPE SIZES BASED ON 6 P.S.I. LOSS PER 100' OR 8 FT. PER SECOND VELOCITY WHICHEVER RESTRICTION IS GREATER.

PIPING MATERIALS:

1. SANITARY SEWER , VENT AND STORM DRAIN PIPING BELOW GROUND : SERVICE WEIGHT NO-HUB CAST IRON WITH STAINLESS STEEL COUPLINGS . PIPE WRAP ALL UNDERGROUND PIPING AS SPECIFIED .
2. SOIL , WASTE VENT , STORM DRAIN PIPING ABOVE GROUND : SERVICE WEIGHT NO-HUB CAST IRON PIPE AND FITTINGS WITH STAINLESS STEEL COUPLINGS .
3. WATER PIPING BELOW GROUND : TYPE 'K' COPPER WITH BRAZED JOINTS . PIPE WRAP ALL UNDER-GROUND PIPING AS SPECIFIED.
4. WATER PIPING ABOVE GROUND : TYPE 'L' COPPER WITH LEAD-FREE SOLDERED JOINTS .
5. GAS PIPING : SCHEDULE 40 BLACK STEEL WITH MALLEABLE IRON SCREWED OR WELDED JOINTS . ALL UNDERGROUND GAS PIPINE SHALL BE WRAPPED AS SPECIFIED AND APPROVED FOR UNDERGROUND USE.
6. CONDENSATE DRAIN PIPING : TYPE 'M' COPPER WITH SOLDERED JOINTS .
7. INSULATION OF DOMESTIC HOT WATER SUPPLY AND CONDENSATE DRAIN PIPING : GLASS FIBER PIPE INSULATION WITH FACTORY APPLIED WHITE JACKET , J-M MICRO-LOK 750AP , 1 INCH THICK FOR PIPE SIZES 1 INCH AND BELOW , AND 1½ INCHES THICK FOR PIPE SIZES 1¼ INCHES AND LARGER .
8. ALL OF THE ABOVE SHALL COMPLY WITH THE SPECIFICATIONS .

PLUMBING GENERAL NOTES

1. SEE ARCHITECTURAL DRAWINGS FOR EXACT LOCATION OF ALL PLUMBING FIXTURES AND DRAINS.
2. COORDINATE ALL LOCATIONS , SIZES AND ELEVATIONS OF ALL SLEEVES THROUGH BEAMS , SLABS AND FOOTINGS WITH STRUCTURAL AND ARCHITECTURAL DRAWINGS.
3. ALL HORIZONTAL WASTE LINES SHALL BE RUN AT A MINIMUM SLOPE OF 1/4" PER FOOT UNLESS OTHERWISE NOTED ON PLAN .
4. COORDINATE WITH ARCHITECTURAL DRAWINGS FOR WALL AND PARTITION CONSTRUCTION AND THICKNESS WHERE PLUMBING PIPING OR EQUIPMENT IS INDICATED .
5. THE LOCATION AND ELEVATION OF ALL PLUMBING PIPING SHALL BE VERIFIED AND COORDINATED WITH ALL OTHER TRADES , STRUCTURAL CONDITIONS AND BUILDING CONSTRUCTION , PRIOR TO START OF INSTALLATION.
6. ALL VALVES AND COCKS SHALL BE LOCATED TO BE READILY ACCESSIBLE. WHERE VALVES ARE INSTALLED WITHIN OR BEHIND WALLS , PARTITIONS OR CEILINGS , AN ACCESS PANEL SHALL BE INSTALLED. WHERE ACCESS PANELS ARE INSTALLED IN PUBLIC PLACES LOCKING PANELS SHALL BE PROVIDED WITH MASTER KEY LOCKS.
7. ALL VENT PIPING THRU ROOF SHALL TERMINATE A MINIMUM OF 25'-0" FROM FRESH AIR INTAKES AND BUILDING OPENINGS.

PLUMBING FIXTURE SCHEDULE

UNIT NO.	DESCRIPTION	CONNECTION SIZES TRAP	W	V	CW	HW	REMARKS
WC-1	WATER CLOSET	INT.	4"	2"	1"	–	WALL HUNG, BATTERY SENSOR FLUSH VALVE, 1.6 GAL./FLUSH
WC-2	WATER CLOSET	INT.	4"	2"	1"	–	WALL HUNG, BATTERY SENSOR FLUSH VALVE, 1.6 GAL./FLUSH, ADA COMPLIANT
U-1	URINAL	INT.	2"	1½"	¾"	–	WALL HUNG, BATTERY SENSOR FLUSH VALVE, 1.0 GAL./FLUSH
U-2	URINAL	INT.	2"	1½"	¾"	–	WALL HUNG, BATTERY SENSOR FLUSH VALVE, 1.0 GAL./ FLUSH, ADA COMPLIANT
L-1	LAVATORY	1¼"	2"	1½"	½"	½"	COUNTER MOUNTED, ADA COMPLIANT
L-2	LAVATORY	1¼"	2"	1½"	½"	½"	WALL HUNG, ADA COMPLIANT
L-3	LAVATORY	1¼"	2"	1½"	½"	½"	WALL HUNG, ADA COMPLIANT
S-1	SINK	1½"	2"	1½"	½"	½"	SINGLE COMPARTMENT, STAINLESS STEEL WITH R/O SYSTEM, HOT WATER DISPENSER, ADA COMPLIANT
S-2	SINK	1½"	2"	1½"	½"	½"	DOUBLE COMPARTMENT, STAINLESS STEEL WITH GARBAGE DISPOSAL, R/O SYSTEM, HOT WATER DISPENSER, ADA COMPLIANT
R-1	REFRIGERATOR ICE MAKER	–	–	–	½"	–	PROVIDE ANGLE STOP IN RECESSED WALL BOX
DW-1	DISHWASHER	–	–	–	–	½"	W/ CHROME PLATED, DECK MOUNTED FIXED AIR GAP
IM-1	ICE MAKER	–	–	–	½"	–	PROVIDE ANGLE STOP IN RECESSED WALL BOX EVERPURE "INSURICE 2000 SINGLE"
HB-1	HOSE BIBB	–	–	–	¾"	–	WITH VACUUM BREAKER
SS-1	SERVICE SINK	3"	3"	2"	¾"	¾"	FLOOR MOUNTED
DF-1	DRINKING FOUNTAIN	1¼"	2"	1½"	½"	–	DUAL HEIGHT, WALL HUNG, ADA COMPLIANT
FS-1	FLOOR SINK	–	–	–	–	–	SEE PLANS FOR SIZE
FD-1	FLOOR DRAIN	–	–	–	–	–	SEE DWG'S FOR SIZES, W/TRAP PRIMER CONN.
RR-1	ROOF RECEPTOR	–	–	–	–	–	SEE PLANS FOR SIZE
RD-1	ROOF DRAIN	–	–	–	–	–	SEE PLANS FOR SIZE
OD-1	OVERFLOW DRAIN	–	–	–	–	–	SEE PLANS FOR SIZE
RO-1	REVERSE OSMOSIS SYSTEM	–	–	–	½"	–	SEE ARCHITECTURAL PLANS FOR LOCATION
HWD-1	HOT WATER DISPENSER	–	–	–	½"	–	SEE ARCHITECTURAL PLANS FOR LOCATION

TITLE 24 MANDATORY MEASURES

APPLICABLE	TITLE 24 MANDATORY MEASURES
	EQUIPMENT AND SYSTEMS EFFICIENCY
☒	ANY APPLIANCE FOR WHICH THERE IS A CALIFORNIA STANDARD ESTABLISHED IN THE APPLIANCE EFFICIENCY STANDARDS MAY BE INSTALLED ONLY IF THE MANUFACTURER HAS CERTIFIED TO THE COMMISSION, AS SPECIFIED IN THOSE REGULATIONS , THAT THE APPLIANCE COMPLIES WITH THE APPLICABLE STANDARD FOR THAT APPLIANCE .
☒	PIPING SYSTEMS SHALL BE INSULATED IN ACCORDANCE WITH REQUIREMENTS OF THE TITLE 24 STANDARDS AND ALL CODES HAVING THE JURISDICTION .
	SERVICE WATER HEATING SYSTEMS
☐	THE FOLLOWING SERVICE WATER HEATING SYSTEMS AND EQUIPMENT MAY BE INSTALLED ONLY IF THE MANUFACTURER HAS CERTIFIED THAT THE EQUIPMENT MEETS OR EXCEEDS ALL APPLICABLE EFFICIENCY REQUIREMENTS LISTED IN 113 OF THE ENERGY EFFICIENCY STANDARDS : GAS-FIRED NON-STORAGE TYPES >200,000 BTU/HR .
☐	UNFIRED SERVICE WATER HEATER STORAGE TANKS AND BACKUP TANKS FOR SOLAR WATER HEATING SYSTEMS SHALL HAVE EITHER : EXTERNAL INSULATION WITH AN INSTALLED R-VALUE OF AT LEAST R-12 , INTERNAL AND EXTERNAL INSULATION WITH A COMBINED R-VALUE OF AT LEAST R-16 , OR SUFFICIENT INSULATION SO THAT THE HEAT LOSS OF THE TANK SURFACE BASED ON AN 80^ F WATER-AIR TEMPERATURE DIFFERENCE SHALL SHALL BE LESS THAN 6.5 BTU / HR / SF .
☒	IF A CIRCULATING HOT WATER SYSTEM IS INSTALLED , IT SHALL HAVE A CONTROL CAPABLE OF AUTOMATICALLY TURNING OFF THE CIRCULATING PUMP(S) WHEN HOT WATER IS NOT REQUIRED .
☒	LAVATORIES IN RESTROOMS OF PUBLIC FACILITIES SHALL BE EQUIPPED WITH :
☒	OUTLET DEVICES THAT LIMIT THE FLOW OF HOT WATER TO A MAXIMUM OF 0.5 GALLONS PER MINUTE .
☐	FOOT ACTUATED CONTROL VALVES , AND OUTLET DEVICES THAT LIMIT THE FLOW OF HOT WATER TO A MAXIMUM OF 0.75 GALLONS PER MINUTE .
☐	PROXIMITY SENSOR ACTUATED CONTROLS VALVES, AND OUTLET DEVICES THAT LIMIT THE FLOW OF HOT WATER TO A MAXIMUM OF 0.75 GALLONS PER MINUTE.
☐	SELF-CLOSING VALVES , AND OUTLET DEVICES THAT LIMIT THE FLOW OF HOT WATER TO A MAXIMUM OF 2.5 GALLONS PER MINUTE , AND 0.25 GALLONS / CYCLE (CIRCULATING SYSTEM) .
☒	SELF-CLOSING VALVES , AND OUTLET DEVICES THAT LIMIT THE FLOW OF HOT WATER TO A MAXIMUM OF 2.5 GALLONS PER MINUTE , AND 0.50 GALLONS / CYCLE (NON-CIRCULATING SYSTEM) .
☐	SELF-CLOSING VALVES , AND OUTLET DEVICES THAT LIMIT THE FLOW OF HOT WATER TO A MAXIMUM OF 2.5 GALLONS PER MINUTE , AND 0.75 GALLONS / CYCLE (FOOT SWITCHES AND PROXIMITY SENSOR CONTROLS) .
☐	LAVATORIES IN RESTROOM OF PUBLIC FACILITIES SHALL BE EQUIPPED WITH CONTROLS TO LIMIT THE OUTLET TEMPERATURE TO 110° F .

LEGEND

SYMBOL	ABBR.	DESCRIPTION
	S OR W	SOIL OR WASTE ABOVE FLOOR OR GRADE
	S OR W	SOIL OR WASTE BELOW FLOOR OR GRADE
SD	SD	STORM DRAIN ABOVE FLOOR OR GRADE
SD	SD	STORM DRAIN BELOW FLOOR OR GRADE
OD	OD	OVERFLOW DRAIN ABOVE FLOOR OR GRADE
OD	OD	OVERFLOW DRAIN BELOW FLOOR OR GRADE
	V	SANITARY VENT
	CW	COLD WATER
ICW	ICW	INDUSTRIAL COLD WATER
	HW	HOT WATER
	HWR	HOT WATER RETURN
F	F	FIRE MAIN
ASD	ASD	AUTOMATIC SPRINKLER DRAIN
D	D	INDIRECT DRAIN LINE
CD	CD	CONDENSATE DRAIN
SCD	SCD	SECONDARY CONDENSATE DRAIN
G	G	FUEL GAS
TP	TP	TRAP PRIMER
		DIRECTION OF FLOW
	P.G.	PRESSURE GAUGE W/PETE COCK
	G.C.	GAS COCK
	P.R.V.	PRESSURE REDUCING VALVE
	G.V.	GATE VALVE
	FCO	FLOOR CLEANOUT
	WCO	WALL CLEANOUT
		DOWN
		RISE
		UNION
%		SLOPE IN DIRECTION OF FLOW
	W.H.A.	WATER HAMMER ARRESTOR
	P.O.C.	POINT OF CONNECTION
	RPBP	REDUCED PRESSURE BACKFLOW PREVENTER
	ABV.	ABOVE
	A.F.F.	ABOVE FINISHED FLOOR
	A.P.	ACCESS PANEL
	BEH.	BEHIND
	BEL.	BELOW
	CLG.	CEILING
	CONT.	CONTINUATION
	DRN	DRAIN
	F.F.E.	FINISHED FLOOR ELEVATION
	FLR.	FLOOR
	FR.	FROM
	FU	FIXTURE UNIT
	GR	GRADE
	HDR	HEADER
	I.E.	INVERT ELEVATION
	I.W.	INDIRECT WASTE
	VTR	VENT THROUGH ROOF

APPROVED
MAY 0 1 2006
BUILDING & SAFETY
CITY OF FONTANA

REVIEWED BY

Approval of these plans shall not be construed to be a permit for, or an approval of any violation of any of the provisions of the state ... laws. One set of approved plans ... be kept on the job until completion
WILLDAN

LANGDON WILSON
ARCHITECTURE PLANNING INTERIORS

18800 VON KARMAN AVENUE, SUITE 200
IRVINE, CALIFORNIA 92612-1517
949 - 833 - 9193

STRUCTURAL
KPFF 949 - 252 - 1022
MECHANICAL
TKSC 949 - 756 - 0565
ELECTRICAL
GLP 714 - 751 - 1851
LANDSCAPE
FRANK RADMACHER 714 - 832 - 1774
CIVIL ENGINEER
IKE CONSULTING 714 - 241 - 0606
AUDIO / VISUAL
VENEKLASEN ASSOCIATES 310 - 450 - 1733
DATA TELEPHONE
PLANNET CONSULTING 714 - 982 - 5800

CITY OF FONTANA
DEVELOPMENT SERVICES
ORGANIZATION BUILDING
8353 SIERRA AVENUE FONTANA, CALIFORNIA

CITY OF FONTANA CALIFORNIA

REV.	DATE	ISSUED FOR	REV.	DATE	ISSUED FOR
	4/17/06	PERMIT/BID			

Stamp

REGISTERED PROFESSIONAL ENGINEER
No M...973
Exp. 06.30.06
MECHANICAL
STATE OF CALIFORNIA

DATE: SCALE: NONE
DRAWN BY: J.J.H.
JOB NO. CADD TITLE: P0-1.dwg

SHEET TITLE:
LEGEND, SCHEDULES, AND NOTES

SHEET NUMBER:
P0-1

© Copyright 2005 Langdon Wilson

PERMIT SET / BID SET 04-17-06

TKSC #05-175

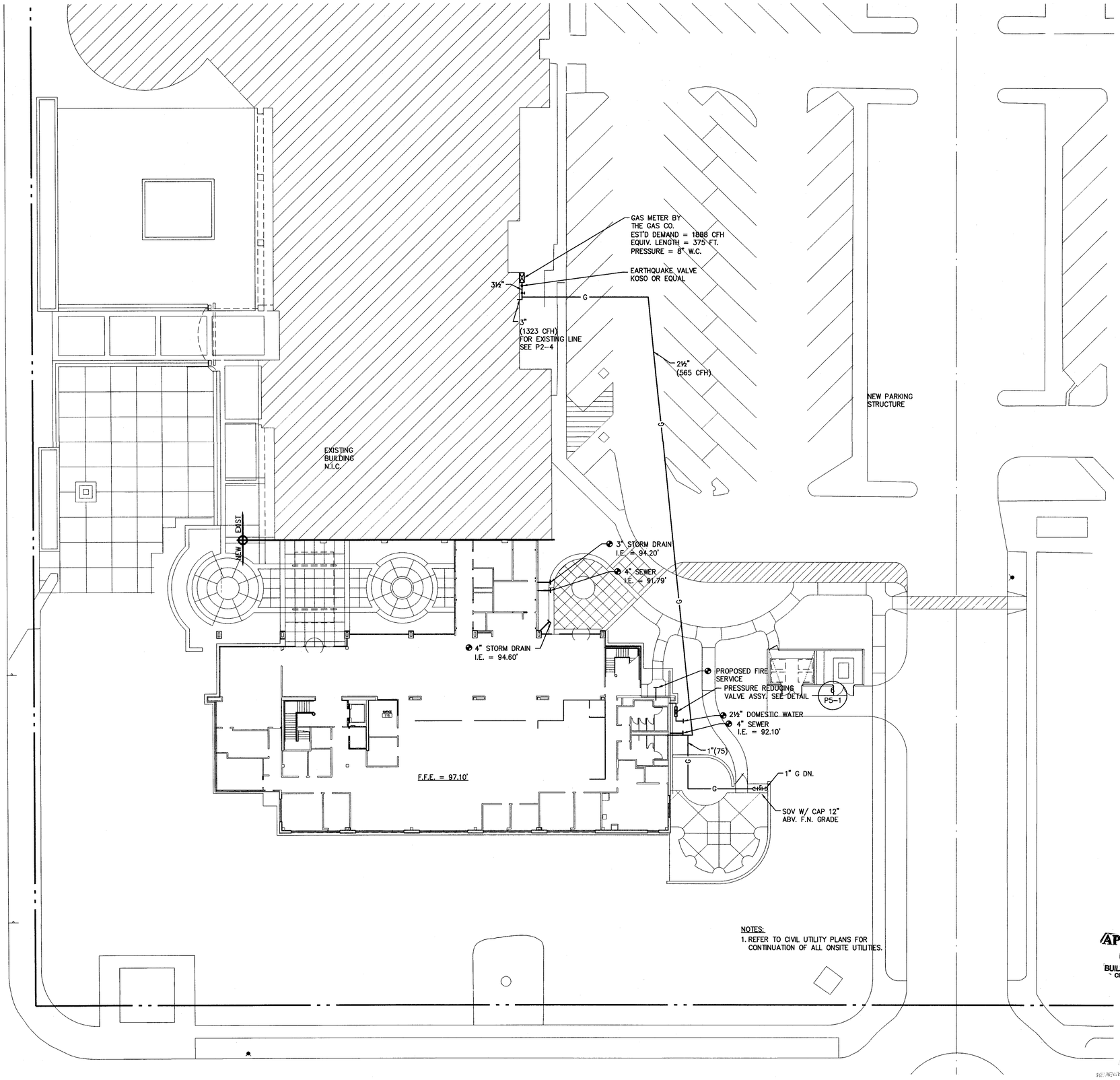

LANGDON
WILSON
ARCHITECTURE
PLANNING
INTERIORS

18800 VON KARMAN AVENUE, SUITE 200
IRVINE, CALIFORNIA 92612-1517
949 - 833 - 9193

STRUCTURAL
KPFF 949 - 252 - 1022
MECHANICAL
TKSC 949 - 756 - 0565
ELECTRICAL
GLP 714 - 751 - 1851
LANDSCAPE
FRANK RADMACHER 714 - 832 - 1774
CIVIL ENGINEER
IKE CONSULTING 714 - 241 - 0606
AUDIO / VISUAL
VENEKLASEN ASSOCIATES 310 - 450 - 1733
DATA TELEPHONE
PLANNET CONSULTING 714 - 982 - 5800

CITY OF FONTANA
DEVELOPMENT SERVICES ORGANIZATION BUILDING

8353 SIERRA AVENUE FONTANA, CALIFORNIA

REV.	DATE	ISSUED FOR	REV.	DATE	ISSUED FOR
	4/17/06	PERMIT/BID			

Stamp

DATE: SCALE 20'=1'-0"
DRAWN BY: J.J.H.
JOB NO. CADD TITLE: P1-1.dwg

SHEET TITLE:
SITE PLAN

SHEET NUMBER:
P1-1

© Copyright 2005 Langdon Wilson

PERMIT SET / BID SET 04-17-06

TKSC #05-175

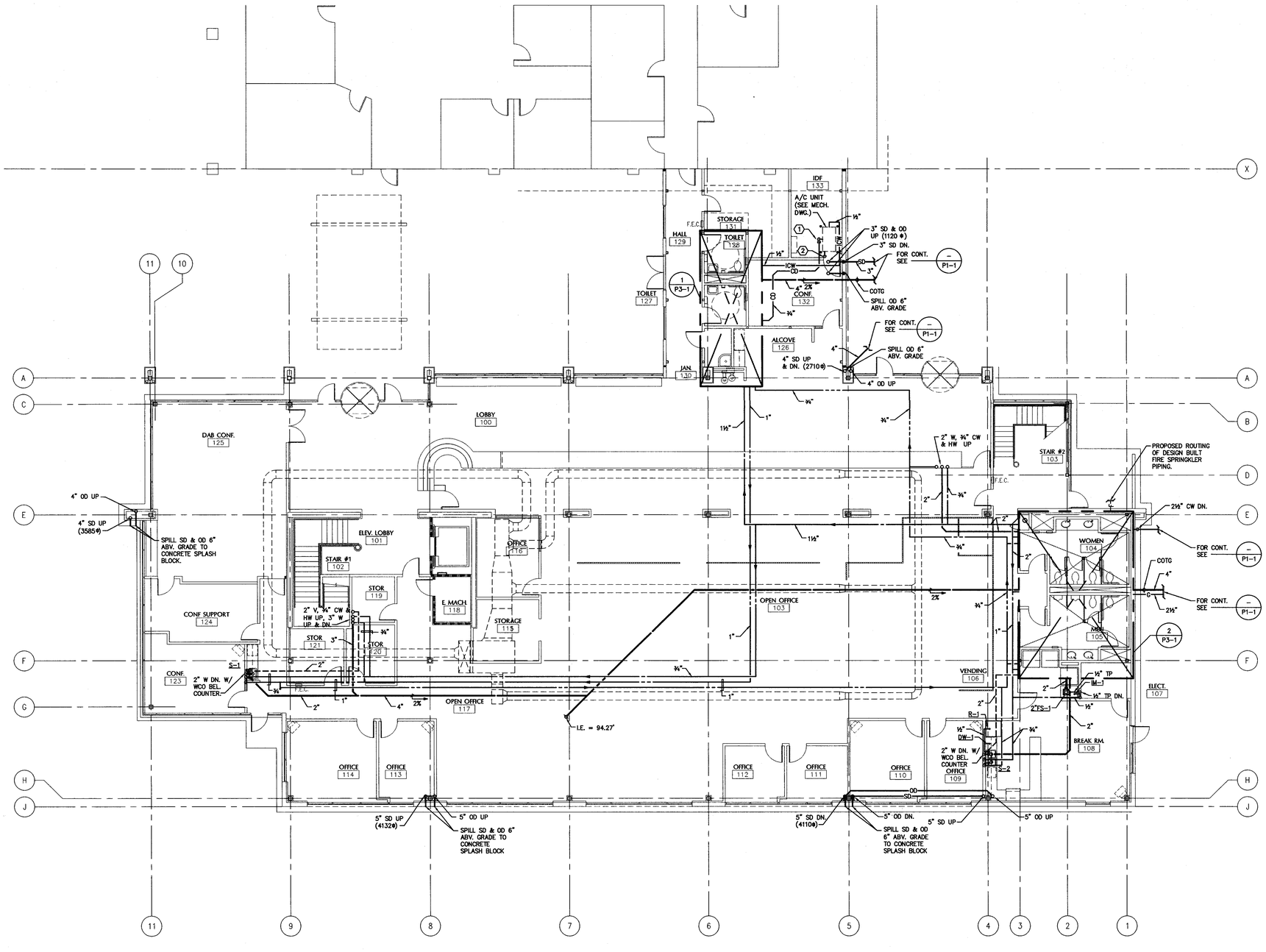

KEY NOTES:

1. CONDENSATE DRAIN TRAP SEE DETAIL 1/P5-1
2. ¾" SPILL SECONDARY CONDENSATE DRAIN DOWN CEILING WITH RECESSED ESCUTCHEON PIPE SHALL NOT BE VISIBLE BELOW CEILING LINE. SEE DETAIL 8/P5-1.

APPROVED
MAY 01 2006
BUILDING & SAFETY
CITY OF FONTANA

REVIEWED BY ... DATE

Approved of these plans ... construed to be ... approval of any ... the provisions of ... laws. One set of ... be kept on the job until completion. WILLDAN

LANGDON WILSON
ARCHITECTURE
PLANNING
INTERIORS

18800 VON KARMAN AVENUE, SUITE 200
IRVINE, CALIFORNIA 92612-1517
949 - 833 - 9193

STRUCTURAL
KPFF 949 - 252 - 1022
MECHANICAL
TKSC 949 - 756 - 0565
ELECTRICAL
GLP 714 - 751 - 1851
LANDSCAPE
FRANK RADMACHER 714 - 832 - 1774
CIVIL ENGINEER
IKE CONSULTING 714 - 241 - 0606
AUDIO / VISUAL
VENEKLASEN ASSOCIATES 310 - 450 - 1733
DATA TELEPHONE
PLANNET CONSULTING 714 - 982 - 5800

CITY OF FONTANA
DEVELOPMENT SERVICES ORGANIZATION BUILDING

8353 SIERRA AVENUE FONTANA, CALIFORNIA

REV.	DATE	ISSUED FOR	REV.	DATE	ISSUED FOR
	4/17/06	PERMIT/BID			

Stamp

REGISTERED PROFESSIONAL ENGINEER
EDWAN LANG
No. 65973
Exp. 06/30/06
MECHANICAL
STATE OF CALIFORNIA

DATE: SCALE: 1/8"=1'-0"
DRAWN BY: J.J.H.
JOB NO. CADD TITLE: P2-1.dwg

SHEET TITLE:
FIRST FLOOR PLUMBING PLAN

SHEET NUMBER:
P2-1

© Copyright 2005 Langdon Wilson

PERMIT SET / BID SET 04-17-06

TKSC #05-175

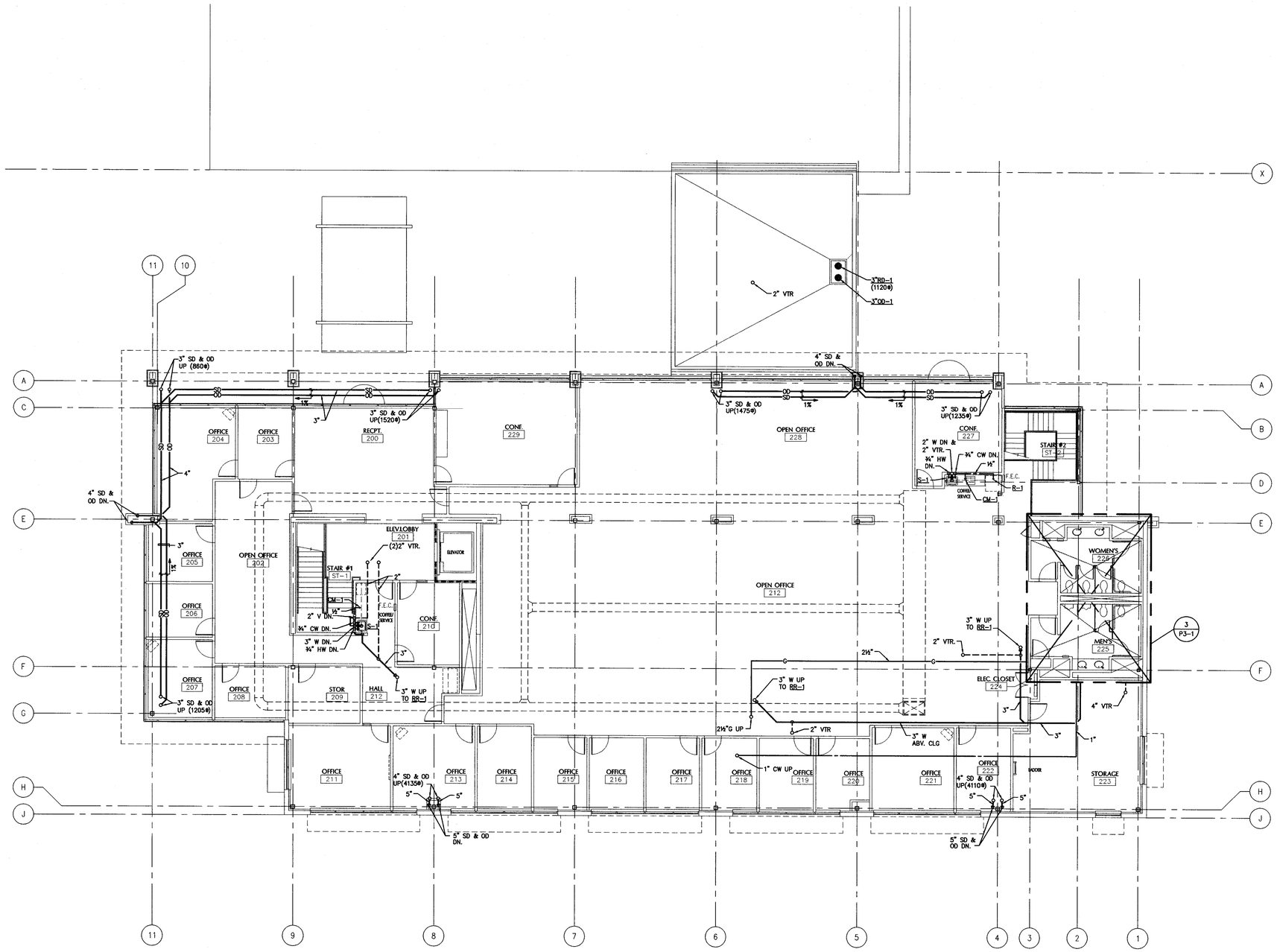

APPROVED
MAY 01 2006
BUILDING & SAFETY
CITY OF FONTANA

DATE

This plan shall not be construed to be a permit to, or an approval of any violation of any provision of the uniform codes or other ordinances of the jurisdiction. This plan shall not be approved until construction.

LANGDON WILSON
ARCHITECTURE
PLANNING
INTERIORS

18800 VON KARMAN AVENUE, SUITE 200
IRVINE, CALIFORNIA 92612-1517
949 - 833 - 9193

STRUCTURAL
KPFF 949 - 252 - 1022
MECHANICAL
TKSC 949 - 756 - 0565
ELECTRICAL
GLP 714 - 751 - 1851
LANDSCAPE
FRANK RADMACHER 714 - 832 - 1774
CIVIL ENGINEER
IKE CONSULTING 714 - 241 - 0606
AUDIO / VISUAL
VENEKLASEN ASSOCIATES 310 - 450 - 1733
DATA TELEPHONE
PLANNET CONSULTING 714 - 982 - 5800

CITY OF FONTANA
DEVELOPMENT SERVICES ORGANIZATION BUILDING

8353 SIERRA AVENUE FONTANA, CALIFORNIA

CITY OF FONTANA CALIFORNIA

REV.	DATE	ISSUED FOR	REV.	DATE	ISSUED FOR
	4/17/06	PERMIT/BID			

Stamp

REGISTERED PROFESSIONAL ENGINEER
Exp. 06/30/06
MECHANICAL
STATE OF CALIFORNIA

DATE: 04-17-06
SCALE: 1/8"=1'-0"
DRAWN BY: J.J.K.
JOB NO.
CADD TITLE: P2-2.dwg

SHEET TITLE:
SECOND FLOOR PLUMBING PLAN

SHEET NUMBER:
P2-2

© Copyright 2005 Langdon Wilson

PERMIT SET / BID SET

TKSC #05-175

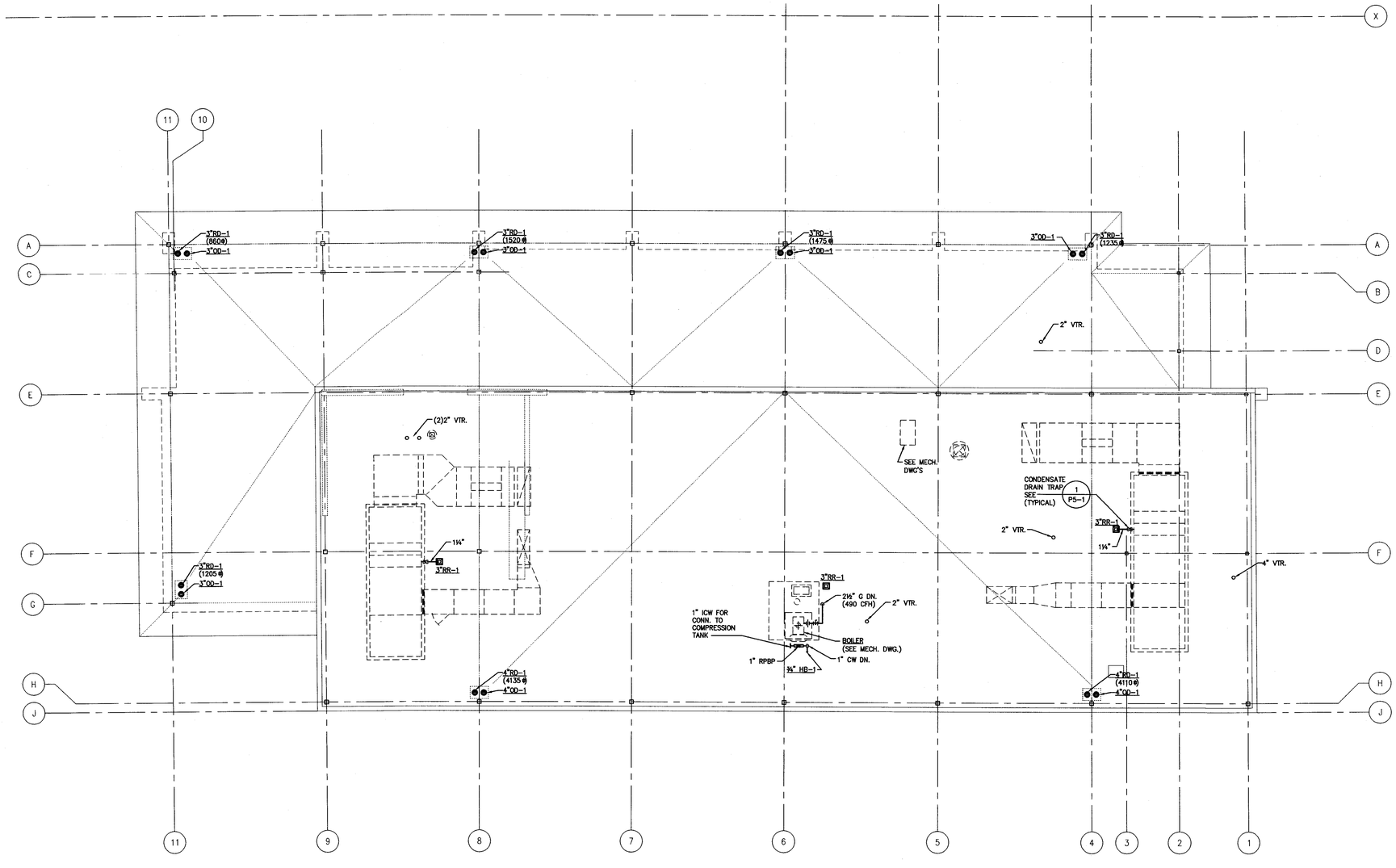

GENERAL NOTES:

1. ALL ROOF DRAIN AND OVERFLOW DRAIN PIPE SIZE ARE BASE ON SIZED PER 2001 CALIFORNIA PLUMBING CODE TABLE 11-1 AND 11-2 FOR A RAINFALL RATE 2 INCHES PER HOUR.
2. REFER TO DETAILS 17/A440 AND 16/A440 FOR ROOF PENETRATION FLASHING.

APPROVED
MAY 01 2006
BUILDING & SAFETY
CITY OF FONTANA

LANGDON WILSON
ARCHITECTURE
PLANNING
INTERIORS

18800 VON KARMAN AVENUE, SUITE 200
IRVINE, CALIFORNIA 92612-1517
949 - 833 - 9193

STRUCTURAL
KPFF 949 - 252 - 1022
MECHANICAL
TKSC 949 - 756 - 0565
ELECTRICAL
CLP 714 - 751 - 1851
LANDSCAPE
FRANK RADMACHER 714 - 832 - 1774
CIVIL ENGINEER
IKE CONSULTING 714 - 241 - 0606
AUDIO / VISUAL
VENEKLASEN ASSOCIATES 310 - 450 - 1733
DATA TELEPHONE
PLANNET CONSULTING 714 - 982 - 5800

CITY OF FONTANA
DEVELOPMENT SERVICES ORGANIZATION BUILDING

8353 SIERRA AVENUE FONTANA, CALIFORNIA

REV.	DATE	ISSUED FOR	REV.	DATE	ISSUED FOR
	4/17/06	PERMIT/BID			

Stamp

DATE: SCALE: 1/8"=1'-0"
DRAWN BY: J.J.H.
JOB NO. CADD TITLE: P2-3.dwg

SHEET TITLE:
ROOF PLAN

SHEET NUMBER:
P2-3

© Copyright 2005 Langdon Wilson

PERMIT SET / BID SET 04-17-06

TKSC #05-175

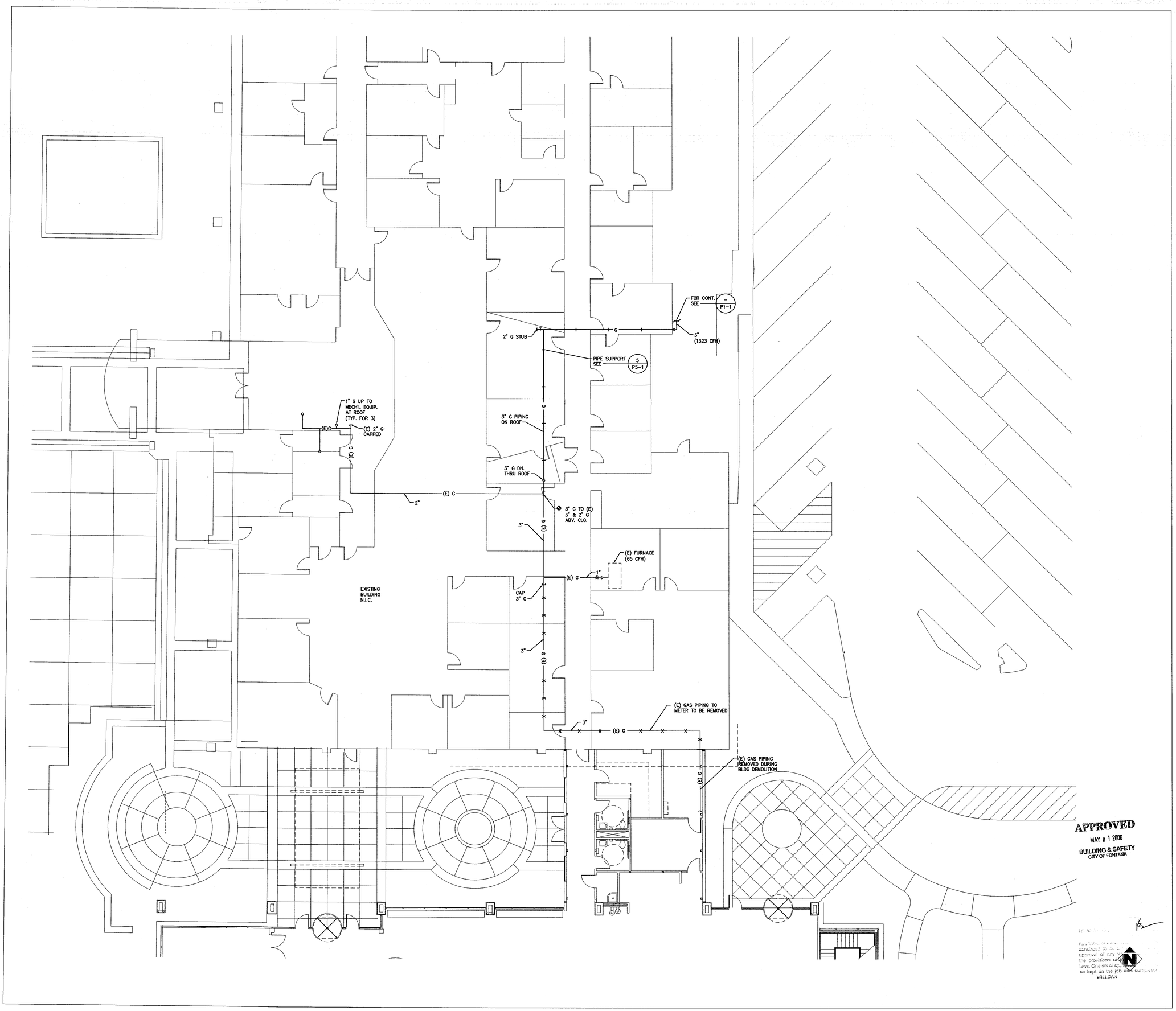

LANGDON WILSON
ARCHITECTURE
PLANNING
INTERIORS

18800 VON KARMAN AVENUE, SUITE 200
IRVINE, CALIFORNIA 92612-1517
949 - 833 - 9193

STRUCTURAL
KPFF 949 - 252 - 1022
MECHANICAL
TKSC 949 - 756 - 0565
ELECTRICAL
GLP 714 - 751 - 1851
LANDSCAPE
FRANK RADMACHER 714 - 832 - 1774
CIVIL ENGINEER
IKE CONSULTING 714 - 241 - 0606
AUDIO / VISUAL
VENEKLASEN ASSOCIATES 310 - 450 - 1733
DATA TELEPHONE
PLANNET CONSULTING 714 - 982 - 5800

CITY OF FONTANA
DEVELOPMENT SERVICES ORGANIZATION BUILDING

8353 SIERRA AVENUE FONTANA, CALIFORNIA

REV.	DATE	ISSUED FOR	REV.	DATE	ISSUED FOR
	4/17/06	PERMIT/BID			

Stamp

DATE: SCALE: 1/8"=1'-0"

DRAWN BY: J.J.H.

JOB NO. CADD TITLE: P2-4.dwg

SHEET TITLE:

EXISTING BLDG PLUMBING PLAN

SHEET NUMBER:

P2-4

© Copyright 2005 Langdon Wilson

PERMIT SET / BID SET 04-17-06

TKSC #05-175

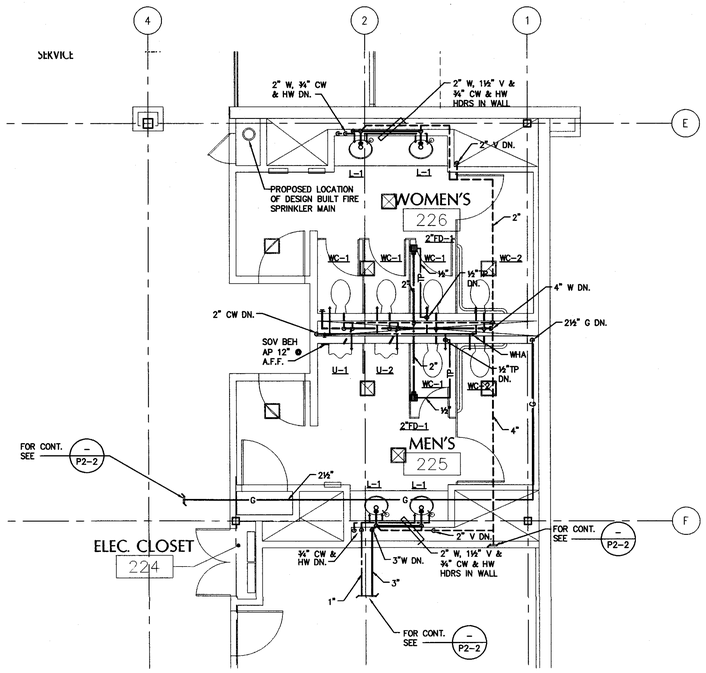

SECOND FLOOR ENLARGED PLAN — SCALE 1/4" = 1'-0" — 3

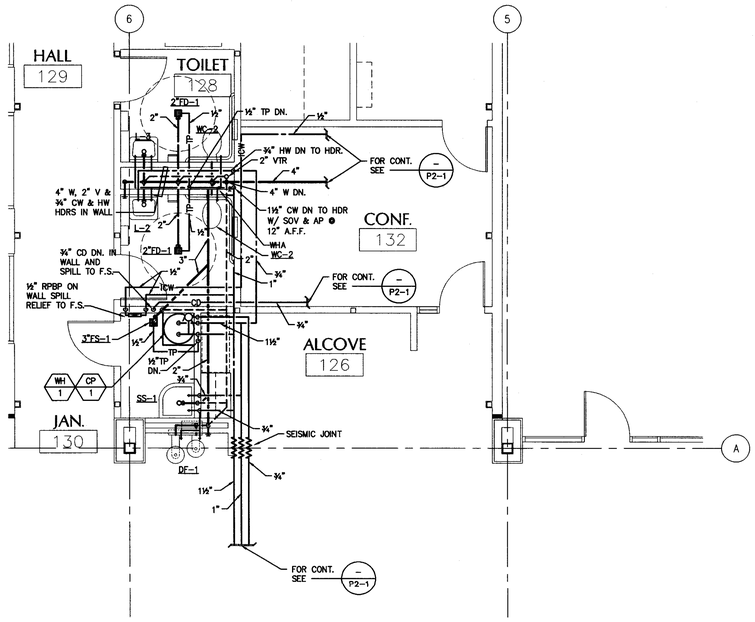

FIRST FLOOR ENLARGED PLAN — SCALE 1/4" = 1'-0" — 1

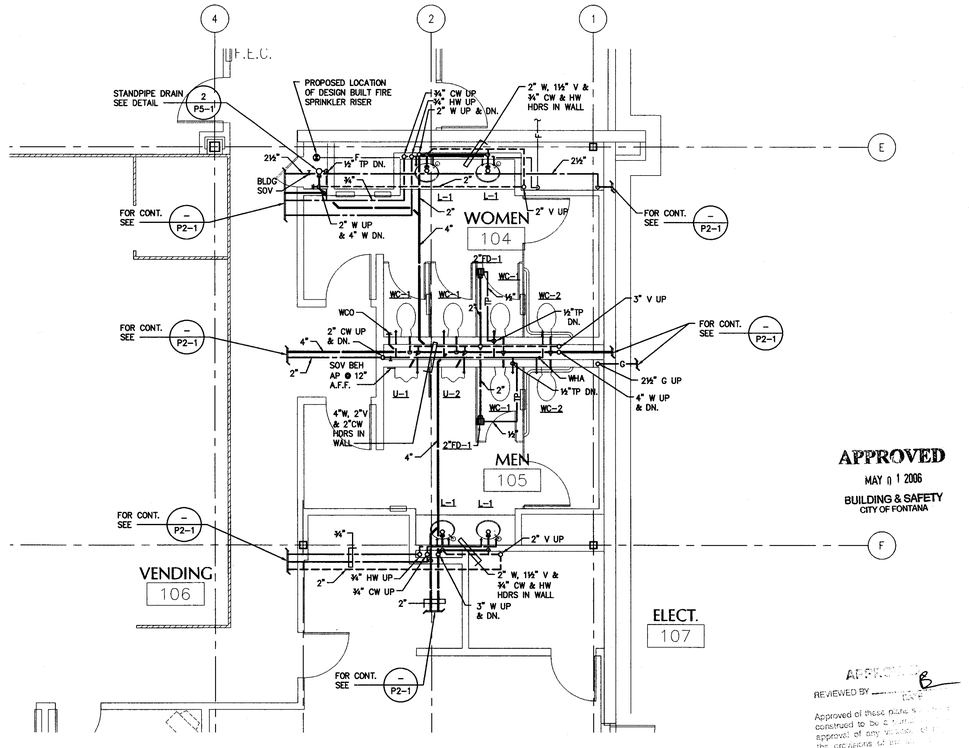

FIRST FLOOR ENLARGED PLAN — SCALE 1/4" = 1'-0" — 2

SCALE NONE — 4

LANGDON WILSON
ARCHITECTURE
PLANNING
INTERIORS

18800 VON KARMAN AVENUE, SUITE 200
IRVINE, CALIFORNIA 92612-1517
949 - 833 - 9193

STRUCTURAL
KPFF 949 - 252 - 1022
MECHANICAL
TKSC 949 - 756 - 0565
ELECTRICAL
GLP 714 - 751 - 1851
LANDSCAPE
FRANK RADMACHER 714 - 832 - 1774
CIVIL ENGINEER
IKE CONSULTING 714 - 241 - 0606
AUDIO / VISUAL
VENEKLASEN ASSOCIATES 310 - 450 - 1733
DATA TELEPHONE
PLANNET CONSULTING 714 - 982 - 5800

CITY OF FONTANA
DEVELOPMENT SERVICES ORGANIZATION BUILDING

8353 SIERRA AVENUE — FONTANA, CALIFORNIA

REV.	DATE	ISSUED FOR	REV.	DATE	ISSUED FOR
	4/17/06	PERMIT/BID			

Stamp

DATE: — SCALE: 1/4"=1'-0"
DRAWN BY: J.J.H.
JOB NO. — CADD TITLE: P3-1.dwg

SHEET TITLE:
ENLARGED PLUMBING PLAN

SHEET NUMBER:
P3-1

© Copyright 2005 Langdon Wilson

PERMIT SET / BID SET 04-17-06

TKSC #05-175

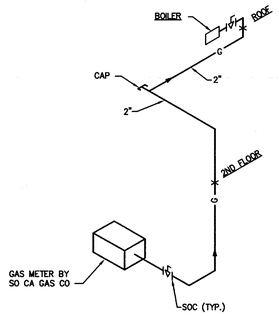

NOTES:

1. 8353 SIERRA (490 CFH): MOST REMOTE OUTLET (BOILER) FROM THE GAS METER = 120 FEET PIPE SIZED PER UPC TABLE 12-3 UNDER LENGTH = 150 FEET.

SCALE	10
NONE	

GAS RISER DIAGRAM

SCALE	7
NONE	

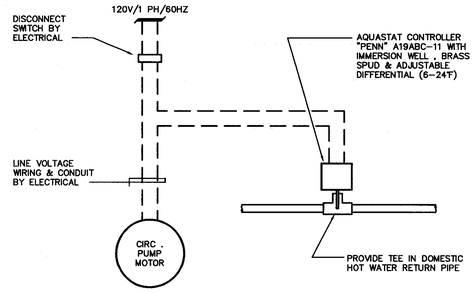

CIRCULATION PUMP WIRING DIAGRAM

SCALE	4
NONE	

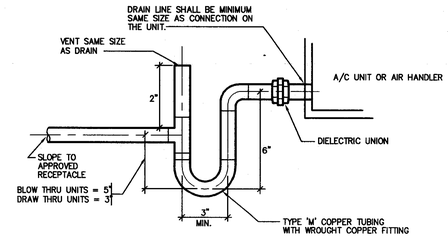

NOTES:

1. ALL INTERIOR CONDENSATE DRAIN PIPING SHALL BE INSULATED.

CONDENSATE DRAIN TRAP

SCALE	1
NONE	

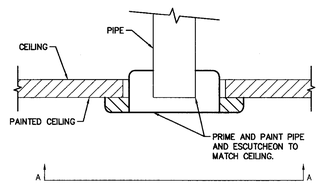

B-B SECTION

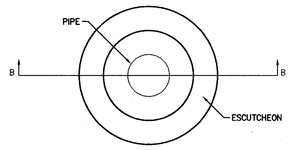

A-A ELEVATION

RECESSED ESCUTCHEON

SCALE	11
NONE	

SCALE	8
NONE	

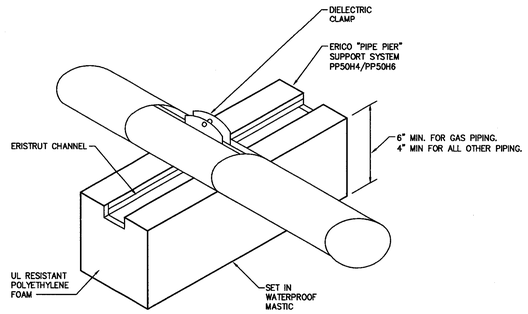

ROOF PIPE SUPPORT

SCALE	5
NONE	

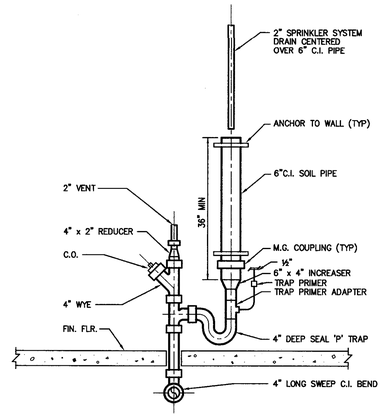

STANDPIPE DRAIN

SCALE	2
NONE	

SCALE	12
NONE	

SCALE	9
NONE	

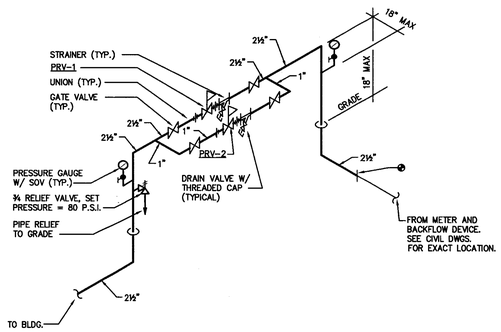

PRV-1 – 2½" P.R.V.
WILKINS 500YSBR
INLET PRESS. = 83 PSI
SET PRESS. = 70 PSI
FALL-OFF PRESS. AT
71 GPM = 10 PSI

PRV-2 – 1" P.R.V.
WILKINS 500YSBR
INLET PRESS. = 83 PSI
SET PRESS. = 75 PSI
FALL-OFF PRESS. AT
20 GPM = 9 PSI

PRESSURE REDUCING VALVE STATION

SCALE	6
NONE	

APPROVED
MAY 01 2006
BUILDING & SAFETY
CITY OF FONTANA

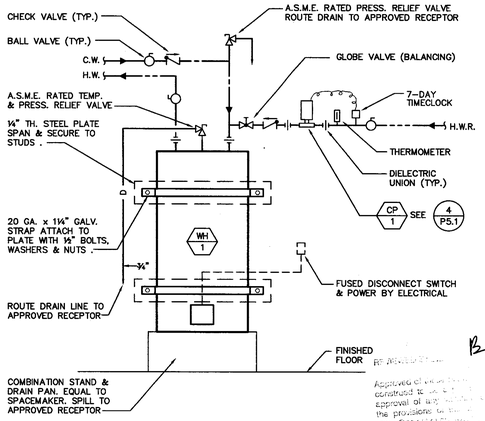

ELECTRIC WATER HEATER

SCALE	3
NONE	

LANGDON
WILSON
ARCHITECTURE
PLANNING
INTERIORS

18800 VON KARMAN AVENUE, SUITE 200
IRVINE, CALIFORNIA 92612-1517
949 · 833 · 9193

STRUCTURAL
KPFF 949 · 252 · 1022
MECHANICAL
TKSC 949 · 756 · 0565
ELECTRICAL
GLP 714 · 751 · 1851
LANDSCAPE
FRANK RADMACHER 714 · 832 · 1774
CIVIL ENGINEER
IKE CONSULTING 714 · 241 · 0606
AUDIO / VISUAL
VENEKLASEN ASSOCIATES 310 · 450 · 1733
DATA TELEPHONE
PLANNET CONSULTING 714 · 982 · 5800

CITY OF FONTANA
DEVELOPMENT SERVICES ORGANIZATION BUILDING

8353 SIERRA AVENUE FONTANA, CALIFORNIA

REV.	DATE	ISSUED FOR	REV.	DATE	ISSUED FOR
	4/17/06	PERMIT/BID			

Stamp

DATE SCALE NONE

DRAWN BY: –

JOB NO. CADD TITLE P5-1.dwg

SHEET TITLE

DETAILS

SHEET NUMBER:

P5-1

© Copyright 2005 Langdon Wilson

PERMIT SET / BID SET 04-17-06

TKSC #05-175

SYMBOL LIST

(ALL SYMBOLS NOT NECESSARILY USED ON THESE DRAWINGS)

ALL SYMBOL DESCRIPTIONS ARE SUBJECT TO MODIFICATION AS NOTED ON THE DRAWINGS. VERIFY EXACT LOCATIONS AND HEIGHTS OF OUTLETS WITH ARCHITECTURAL ELEVATIONS PRIOR TO ROUGH-IN. ALL MOUNTING HEIGHTS ARE TO CENTER OF BOX ABOVE FINISHED FLOOR OR GRADE RESPECTIVELY. THE TERM UNLESS NOTED OTHERWISE APPLIES TO ALL SYMBOLS.

- RECESSED, SURFACE OR PENDANT MOUNTED FLUORESCENT LIGHTING FIXTURE, AS INDICATED BY FIXTURE SCHEDULE, ON FLUSH MOUNTED OUTLET BOX.
- RECESSED, SURFACE, PENDANT OR CHAIN MOUNTED FLUORESCENT STRIP OR INDUSTRIAL LIGHTING FIXTURE, AS INDICATED BY FIXTURE SCHEDULE, ON FLUSH MOUNTED OUTLET BOX.
- RECESSED, SURFACE OR PENDANT MOUNTED LIGHTING FIXTURE, AS INDICATED BY FIXTURE SCHEDULE, ON FLUSH CEILING MOUNTED OUTLET BOX.
- SURFACE OR FLUSH MOUNTED LIGHTING FIXTURE, AS INDICATED BY FIXTURE SCHEDULE, ON WALL MOUNTED OUTLET BOX, AT +90".
- RECESSED, SURFACE OR PENDANT MOUNTED LIGHTING FIXTURE ON EMERGENCY OR NIGHT LIGHTING CIRCUIT. PROVIDE SEPARATE EMERGENCY BATTERY PACK AS REQUIRED. AS INDICATED BY FIXTURE SCHEDULE.
- LIGHTING FIXTURE WITH LAMPS ON NORMAL AND EMERGENCY LIGHTING CIRCUITS. PROVIDE SEPARATE LAMP BALLASTS/ EMERGENCY BATTERY PACKS AS REQUIRED. SHADING INDICATES EMERGENCY FIXTURE. AS INDICATED BY FIXTURE SCHEDULE.
- ab — LIGHTING FIXTURE RECESSED MOUNTED WITH OUTLET BOX AND REMOTE MOUNTED JUNCTION BOX CONCEALED ABOVE ACCESSIBLE CEILING. PROVIDE FLEXIBLE CONDUIT CONNECTION, 6 FT. MAXIMUM LENGTH, 1/2" DIAMETER MINIMUM, FROM JUNCTION BOX TO FIXTURE OUTLET. PROVIDE CONDUCTORS IN CONDUIT, QUANTITY AS REQUIRED FOR INDICATED CIRCUITS AND SWITCHING CONTROLS, #12 (AWG) MINIMUM. "ab" INDICATES SWITCHING CONTROL. PROVIDE SEPARATE BALLAST FOR EACH SWITCH LEG.
- WALL WASH LIGHTING FIXTURE, RECESS MOUNTED, WITH OUTLET BOX.
- LIGHTING BOLLARD AND SUPPORT BASE.
- POST TOP LIGHTING STANDARD, POLE MOUNTED LUMINAIRE, POLE AND POLE SUPPORT BASE.
- LIGHTING STANDARD WITH SINGLE ARM MOUNTED LUMINAIRE, POLE AND POLE BASE SUPPORT.
- LIGHTING STANDARD WITH TWIN ARM MOUNTED LUMINAIRES AT 180 DEGREES, POLE AND POLE SUPPORT BASE.
- LIGHTING STANDARD WITH TWIN ARM MOUNTED LUMINAIRES AT 90 DEGREES, POLE AND POLE SUPPORT BASE.
- LIGHTING STANDARD WITH TRIPLE ARM MOUNTED LUMINAIRES AT 120 DEGREES, POLE AND POLE SUPPORT BASE.
- LIGHTING STANDARD WITH TRIPLE ARM MOUNTED LUMINAIRES AT 90 DEGREES, POLE AND POLE SUPPORT BASE.
- LIGHTING STANDARD WITH QUADRUPLE ARM MOUNTED LUMINAIRES AT 90 DEGREES, POLE AND POLE SUPPORT BASE.
- UPLIGHT, MOUNTED FLUSH WITH FINISHED GRADE.
- FLOODLIGHTING FIXTURE WITH WEATHERPROOF OUTLET BOX.
- LIGHTING TRACK WITH FIXTURE(S). CEILING, PENDANT, OR WALL MOUNTED, WITH FLUSH OUTLET BOX.
- EXIT SIGN, SINGLE FACE, UNIVERSALLY MOUNTED WITH OUTLET BOX. ARROW(S) INDICATES DIRECTIONAL ARROW(S) ON EXIT SIGN FACE.
- EXIT SIGN, DOUBLE FACE, UNIVERSALLY MOUNTED WITH OUTLET BOX.
- EXIT SIGN, ON FLUSH WALL MOUNTED OUTLET BOX, AT +90".
- WALL/DOOR MOUNTED SELF-LUMINOUS LOW LEVEL EXIT SIGN. THE BOTTOM OF THE SIGN SHALL NOT BE LESS THAN 6" OR MORE THAN 8" ABOVE THE FLOOR LEVEL AND SHALL INDICATE THE PATH OF EXIT TRAVEL. FOR EXIT AND EXIT-ACCESS DOORS, THE SIGN SHALL BE ON THE DOOR OR ADJACENT TO THE DOOR WITH THE CLOSEST EDGE OF THE SIGN OR MARKER WITHIN 4" OF THE DOOR FRAME.
- A / 100 — FIXTURE SCHEDULE DESIGNATION, "A" INDICATES FIXTURE TYPE, "100" INDICATES TOTAL FIXTURE VOLT-AMPS.
- $S^{2,P}_{a,b}$ — SINGLE POLE TOGGLE SWITCH, ON FLUSH WALL MOUNTED OUTLET BOX, AT +42". INSTALL MULTIPLE SWITCHES UNDER COMMON COVER PLATE. SUBSCRIPT OR SUPERSCRIPT AT SWITCH SYMBOL INDICATES THE FOLLOWING:
  - 2 – DOUBLE POLE
  - 3 – THREE WAY
  - R – SPDT MOMENTARY CONTACT RELAY SWITCH
  - T – TWIST TIMER, 0-30 MINUTES U.N.O.
  - 4 – FOUR WAY
  - P – PILOT LIGHT
  - M – MOTOR RATED
  - K – KEY OPERATED
  - V – VAPOR PROOF
  - a,b,c,d, ETC. – MULTIPLE SWITCHES WITH IDENTIFICATION OF OUTLET CONTROLLED.
- \$ — SWITCH FOR CONTROL OF LOW VOLTAGE LIGHTING RELAY(S), ON FLUSH WALL MOUNTED OUTLET BOX +42". INSTALL MULTIPLE SWITCHES UNDER COMMON COVER PLATE.
- LIGHTING DIMMER, ON FLUSH WALL MOUNTED OUTLET BOX, AT +42". DIMMERS SHALL BE 2000 WATT, UNLESS NOTED OTHERWISE.
- OCCUPANCY MOTION SENSOR ON FLUSH CEILING MOUNTED OUTLET BOX.
- OCCUPANCY MOTION SENSOR ON FLUSH WALL MOUNTED OUTLET BOX, AT +42". SUBSCRIPT INDICATES MULTIPLE SWITCHES WITH IDENTIFICATION OF OUTLET CONTROLLED.
- COMBINATION OCCUPANCY/INTRUSION DETECTION MOTION SENSOR ON FLUSH CEILING MOUNTED OUTLET BOX.
- DUPLEX CONVENIENCE RECEPTACLE VERTICAL ON FLUSH WALL MOUNTED OUTLET BOX, AT +18".
- DUPLEX CONVENIENCE RECEPTACLE HORIZONTAL ON FLUSH WALL MOUNTED JUNCTION BOX, AT +6" ABOVE COUNTER SPLASH WHERE SPLASH OCCURS AND +6" ABOVE COUNTER TOP WHERE SPLASH DOES NOT OCCUR.
- DOUBLE DUPLEX (FOUR-PLEX) CONVENIENCE RECEPTACLE ON FLUSH MOUNTED OUTLET BOX, AT +18". "C" INDICATES 6" ABOVE COUNTER SPLASH WHERE SPLASH OCCURS AND 6" ABOVE COUNTER WHERE SPLASH DOES NOT OCCUR.
- SINGLE RECEPTACLE, NEMA CONFIGURATION PER EQUIPMENT MANUFACTURER REQUIREMENTS, ON FLUSH WALL MOUNTED OUTLET BOX, AT +18".
- DUPLEX CONVENIENCE RECEPTACLE WITH INTERNAL GROUND FAULT INTERRUPTER, VERTICAL ON FLUSH WALL MOUNTED OUTLET BOX, AT +18".
- DUPLEX CONVENIENCE RECEPTACLE WITH INTERNAL GROUND FAULT INTERRUPTER, HORIZONTAL ON FLUSH WALL MOUNTED OUTLET BOX, AT +6" ABOVE COUNTER SPLASH WHERE SPLASH OCCURS AND AT +6" ABOVE COUNTER WHERE SPLASH DOES NOT OCCUR.
- DOUBLE DUPLEX CONVENIENCE RECEPTACLE WITH INTERNAL GROUND FAULT INTERRUPTER, VERTICAL ON FLUSH WALL MOUNTED OUTLET BOX MOUNTED AT +18".
- WP — DUPLEX CONVENIENCE RECEPTACLE, WITH INTERNAL GROUND FAULT INTERRUPTER, IN WEATHERPROOF FLUSH WALL MOUNTED ENCLOSURE WITH HINGED DOOR, LOCK AND KEY, AT +18".
- WP — DUPLEX CONVENIENCE RECEPTACLE, WITH INTERNAL GROUND FAULT INTERRUPTER, IN WEATHERPROOF ENCLOSURE WITH DIE-CAST ALUMINUM IN-USE COVER, AT +18".
- DUPLEX CONVENIENCE RECEPTACLE ON FLUSH, FLOOR MOUNTED OUTLET BOX. "P" INDICATES PEDESTAL TYPE ON FLUSH FLOOR MOUNTED OUTLET BOX.
- DOUBLE DUPLEX CONVENIENCE RECEPTACLE ON FLUSH, FLOOR MOUNTED OUTLET BOX. "P" INDICATES PEDESTAL TYPE BACK TO BACK.
- DUPLEX CONVENIENCE RECEPTACLE, ON FLUSH CEILING MOUNTED OUTLET BOX.
- DUPLEX CONVENIENCE RECEPTACLE WITH ISOLATED GROUND VERTICAL ON FLUSH WALL MOUNTED OUTLET BOX, AT +18".
- DUPLEX CONVENIENCE RECEPTACLE, ON FLUSH CEILING MOUNTED OUTLET BOX.
- DUPLEX CONVENIENCE RECEPTACLE, ON FLUSH CEILING MOUNTED OUTLET BOX.
- DOUBLE DUPLEX (FOUR-PLEX) CONVENIENCE RECEPTACLE WITH ISOLATED GROUND ON FLUSH MOUNTED OUTLET BOX, AT +18". "C" INDICATES 6" ABOVE COUNTER SPLASH WHERE SPLASH OCCURS AND 6" ABOVE COUNTER WHERE SPLASH DOES NOT OCCUR.
- DUPLEX CONVENIENCE RECEPTACLE WITH ISOLATED GROUND HORIZONTAL ON FLUSH WALL MOUNTED JUNCTION BOX, AT +6" ABOVE COUNTER SPLASH WHERE SPLASH OCCURS AND +6" ABOVE COUNTER TOP WHERE SPLASH DOES NOT OCCUR.
- SURFACE MULTI-OUTLET RACEWAY WITH DEVICES IN RACEWAY AS INDICATED, ON FLUSH WALL MOUNTED OUTLET BOX AT +18", AT +6" ABOVE COUNTER SPLASH WHERE SPLASH OCCURS AND AT +6" ABOVE COUNTER WHERE SPLASH DOES NOT OCCUR. WHERE SURFACE MULTI-OUTLET RACEWAY IS INDICATED ON BOTH THE POWER AND SIGNAL PLANS, WITH DEVICES, RACEWAY SHALL BE A COMMON, MULTI COMPARTMENT RACEWAY WITH SEPARATE COMPARTMENTS FOR POWER AND SIGNAL SYSTEMS.
- DENOTES RACEWAY STUB.
- JUNCTION BOX, FLUSH WALL MOUNTED, AT +18".
- JUNCTION BOX CONCEALED IN ACCESSIBLE CEILING SPACE.

- INDICATES CONNECTION TO EQUIPMENT AS REQUIRED. PROVIDE FLEXIBLE CONDUIT CONNECTION, 6 FT. MAXIMUM LENGTH FROM JUNCTION BOX TO EQUIPMENT. SIZE CONDUIT AND CONDUCTORS ACCORDING TO EQUIPMENT REQUIREMENTS.
- JUNCTION BOX, FLUSH IN FLOOR MOUNTED OUTLET BOX.
- THERMOSTAT ON FLUSH WALL MOUNTED OUTLET BOX. REFER TO MECHANICAL DRAWINGS FOR HEIGHT, LOCATION, CONDUIT AND CONTROL WIRING REQUIREMENTS.
- PANELBOARD, LINE INDICATES PANEL FRONT. REFER TO PANEL SCHEDULE FOR MOUNTING REQUIREMENTS.
- TERMINAL CABINET OR EQUIPMENT CABINET. LINE INDICATES CABINET FRONT.
- SWITCHGEAR.
- T — TRANSFORMER.
- CIRCUIT BREAKER STATIONARY (NON-DRAWOUT).
- FUSIBLE SWITCH AND FUSE DEVICE. STATIONARY SWITCH (NON-DRAWOUT) REMOVABLE FUSES.
- GFCI — CIRCUIT BREAKER WITH ZERO SEQUENCE GROUND FAULT RELAY SYSTEM.
- TRANSFORMER. kVA, LINE AND LOAD VOLTAGE RATINGS AS INDICATED.
- NF — FUSED SAFETY SWITCH (DISCONNECT), HORSE POWER RATED. MOUNT ON WALL, AT +42", OR ON EQUIPMENT, AT +36". PROVIDE SWITCH AND FUSES SIZED PER EQUIPMENT MANUFACTURER'S REQUIREMENTS. "NF" INDICATES NON-FUSED.
- NF — EQUIPMENT CONNECTION. PROVIDE FUSED SAFETY SWITCH (DISCONNECT), HORSE POWER RATED, WALL MOUNTED, AT +42", OR EQUIPMENT MOUNTED, AT +36". PROVIDE SWITCH AND FUSES SIZED PER EQUIPMENT MANUFACTURER'S REQUIREMENTS. "NF" INDICATES NON-FUSED.
- (3) — MAGNETIC MOTOR STARTER. NUMBER INDICATES NEMA SIZE "3". SIZE PER EQUIPMENT MANUFACTURER'S REQUIREMENTS.
- (3) — COMBINATION MAGNETIC MOTOR STARTER AND FUSED SAFETY SWITCH. NUMBER INDICATES NEMA SIZE "3". SIZE PER EQUIPMENT MANUFACTURER'S REQUIREMENTS.
- M — 120V MOTORIZED SMOKE DAMPER (F.B.O.). CONNECT TO FIRE ALARM SYSTEM AS REQUIRED. PROVIDE RATED DISCONNECT SWITCH AT EACH LOCATION.
- PUSH BUTTON STATION WITH "STOP-START" PUSH BUTTONS AND RED INDICATING PILOT LIGHT ON FLUSH WALL MOUNTED OUTLET BOX, AT +42".
- CONDUIT, INSTALLED CONCEALED.
  - 3/4"C.-2#12
  - 3/4"C.-3#12
  - 3/4"C.-4#12
  - 3/4"C.-5#12
  - 3/4"C.-6#12
- CONDUIT, INSTALLED CONCEALED IN OR UNDER FLOOR OR BELOW GRADE, 3/4" CONDUIT MINIMUM.
- CONDUIT, INSTALLED EXPOSED.
- UNDERGROUND CONDUIT STUB UP, STUB 5'-0" FROM BUILDING, CONCRETE OR ASPHALT. CAP, MARK AND RECORD.
- A-1,3,5 — CONDUIT HOMERUN INSTALLED CONCEALED TO PANEL "A", CIRCUITS 1, 3, & 5 WITH COMMON NEUTRAL.
  - 3/4"C.-2#10
  - 3/4"C.-3#10
  - 3/4"C.-4#10
  - 3/4"C.-5#10
  - 3/4"C.-6#10
- -----E----- — EXISTING CONDUIT/RACEWAY TO REMAIN.
- EF / 1 — MECHANICAL/PLUMBING EQUIPMENT CALLOUT. REFER TO MECHANICAL/PLUMBING DRAWINGS AND SPECIFICATIONS FOR EXACT LOCATIONS AND REQUIREMENTS OF EQUIPMENT.
- +42" — MOUNTING HEIGHT TO CENTER LINE OF DEVICE FROM FINISHED FLOOR OR FINISHED GRADE.
- 1 — PLAN NOTE CALLOUT. REFER TO CORRESPONDING NOTE ON DRAWING WHERE CALLOUT OCCURS.
- WYE CONFIGURATION.
- "Z1" — ZONE, "1" INDICATES ZONE #1.
- CONNECT TO SOLID GROUND REFERENCE POINT.
- DELTA CONFIGURATION.
- C / E-2 — DETAIL CALLOUT, "C" INDICATES DETAIL, "E-2" INDICATES DRAWING WHERE DETAIL OCCURS.
- P1 / E-2 — EQUIPMENT REFERENCE, "P1" INDICATES EQUIPMENT NAME, "E-2" INDICATES DRAWING WHERE EQUIPMENT IS FURTHER DETAILED.
- 2 — KITCHEN OR FOOD SERVICE EQUIPMENT CALLOUT. REFER TO FOOD SERVICE DRAWINGS FOR CORRESPONDING CALLOUT AND EQUIPMENT SCHEDULE INDICATING MOUNTING HEIGHTS, LOCATIONS AND ELECTRICAL REQUIREMENTS.
- E — EXISTING WIRING OR DEVICE TO REMAIN.
- R — EXISTING WIRING OR DEVICE TO BE REMOVED. PROVIDE CONDUIT AND WIRE AS REQUIRED TO MAINTAIN A COMPLETE AND OPERABLE OPERATION OF REMAINING DEVICES.
- ER — EXISING WIRING OR DEVICE TO BE RELOCATED.
- EN — EXISTING WIRING OR DEVICE IN NEW LOCATION.
- GROUND BUS WITH MULTIPLE TERMINAL LUGS MOUNTED AT +18" ABOVE FINISHED FLOOR.
- TELEPHONE OUTLET, ON FLUSH FLOOR MOUNTED OUTLET BOX. "P" INDICATES PEDESTAL TYPE.
- TELEPHONE/INTERCOM OUTLET WITH HANDSET, ON FLUSH WALL MOUNTED OUTLET BOX, AT +18". SUBSCRIPT OR SUPERSCRIPT AT SIGNAL SYMBOLS INDICATES THE FOLLOWING: C – OUTLET HORIZONTAL IN FLUSH WALL MOUNTED OUTLET BOX, AT +6" W – OUTLET ON FLUSH WALL MOUNTED OUTLET BOX, AT +42".
- CLOCK OUTLET, ON FLUSH WALL MOUNTED OUTLET BOX, AT +90", WITH CLOCK.
- PUSH-BUTTON STATION, RED, MUSHROOM TYPE ON FLUSH WALL MOUNTED OUTLET BOX, AT +42".
- SPEAKER, BACKBOX AND GRILLE, CEILING MOUNTED OUTLET BOX.
- SPEAKER, BACKBOX AND GRILLE, WALL MOUNTED, AT +90".
- LONG THROW SPEAKER, VANDAL RESISTANT CAGE AND BACKBOX, WALL MOUNTED, AT +90".
- TELEVISION OUTLET, ON FLUSH WALL MOUNTED OUTLET BOX, AT +84".
- TELEVISION OUTLET, ON FLUSH FLOOR MOUNTED OUTLET BOX. "P" INDICATES PEDESTAL TYPE.
- TELEVISION OUTLET, ON FLUSH CEILING MOUNTED OUTLET BOX.
- AUDIO/VISUAL OUTLET, ON FLUSH WALL MOUNTED OUTLET BOX, AT +18".
- DATA OUTLET WITH ONE JACK PORT ON FLUSH FLOOR MOUNTED BOX. "P" INDICATES PEDESTAL TYPE.
- DATA OUTLET WITH ONE JACK PORT, ON FLUSH WALL MOUNTED OUTLET BOX, AT +18". "C" INDICATES HORIZONTAL IN FLUSH WALL MOUNTED OUTLET BOX, AT 6" ABOVE COUNTER SPLASH WHERE SPLASH OCCURS, AND AT 6" ABOVE COUNTER WHERE SPLASH DOES NOT OCCUR.

- DATA OUTLET WITH TWO JACK PORTS, ON FLUSH WALL MOUNTED OUTLET BOX, AT +18". "C" INDICATES HORIZONTAL IN FLUSH WALL MOUNTED OUTLET BOX, AT +6" ABOVE COUNTER SPLASH WHERE SPLASH OCCURS AND AT +6" ABOVE COUNTER WHERE SPLASH DOES NOT OCCUR.
- DATA OUTLET WITH TWO JACK PORTS, ON FLUSH FLOOR MOUNTED BOX. "P" INDICATES PEDESTAL TYPE.
- CLASS PASSING BELL, ON FLUSH WALL MOUNTED OUTLET BOX, AT +90".
- MICROPHONE OUTLET, ON FLUSH WALL MOUNTED OUTLET BOX, AT +18".
- MICROPHONE OUTLET, ON FLUSH FLOOR MOUNTED OUTLET BOX. "P" INDICATES PEDESTAL TYPE.
- MICROPHONE OUTLET, ON FLUSH CEILING MOUNTED OUTLET BOX.
- PROJECTOR OUTLET, ON FLUSH WALL MOUNTED OUTLET BOX, AT +18".
- PROJECTOR OUTLET, ON FLUSH CEILING MOUNTED OUTLET BOX.
- PROJECTOR OUTLET, ON FLUSH FLOOR MOUNTED OUTLET BOX. "P" INDICATES PEDESTAL TYPE.
- ASSISTIVE LISTENING SYSTEM EMITTER, SURFACE MOUNTED ON FLUSH MOUNTED OUTLET BOX. MOUNTING HEIGHT AS INDICATED ON DRAWINGS.
- INTRUSION DETECTION SYSTEM KEYPAD, ON FLUSH WALL MOUNTED OUTLET BOX, AT +42".
- INTRUSION DETECTION MOTION SENSOR, ON FLUSH WALL MOUNTED OUTLET BOX, AT +90".
- INTRUSION DETECTION SYSTEM MOTION SENSOR, ON FLUSH CEILING MOUNTED OUTLET BOX.
- INTRUSION DETECTION SYSTEM DOOR CONTACTS. COORDINATE INSTALLATION WITH DOOR CONTRACTOR.
- LIGHTING CONTROL DIGITAL SWITCH LC & D "CH" SERIES. (SEE DETAIL #1, SHEET E006 FOR CONTROL DIAGRAM)
- MRP — MICRO RELAY PANEL LC&D #GR2400-iDH SERIES. PROVIDE NUMBER OF RELAYS AS SHOWN ON PLANS. (SEE DETAIL #1, SHEET E006 FOR CONTROL DIAGRAM)
- FIRE ALARM HORN, +90" UNO, WEATHERPROOF WHERE INDICATED WP
- FIRE ALARM COMBINATION MINI-HORN/STROBE LIGHT, CANDELA RATING AS NOTED, MOUNTING HEIGHT PER CODE
- FIRE ALARM STROBE LIGHT, CANDELA RATING AS NOTED, MOUNTING HEIGHT PER CODE
- FIRE ALARM MINI-HORN, MOUNTING HEIGHT PER CODE
- FIRE ALARM BELL, +90" UNO, WEATHERPROOF
- FIRE ALARM MANUAL PULL STATION, +48"
- FIRE SPRINKLER FLOW SWITCH WITH MONITOR MODULE
- FIRE SPRINKLER TAMPER SWITCH WITH MONITOR MODULE
- FIRE ALARM SMOKE DETECTOR (IONIZATION TYPE, UNO.)
- FIRE ALARM HEAT DETECTOR
- DUCT SMOKE DETECTOR. CONNECT TO FIRE ALARM SYSTEM AS REQUIRED.

ABBREVIATIONS:

A, AMP	AMPERE(S)
AF	AMP FUSE
AFF	ABOVE FINISHED FLOOR
AFG	ABOVE FINISHED GRADE
AIC	AMPERES INTERRUPTING CURRENT
AS	AMP SWITCH
AWG	AMERICAN WIRE GAUGE
BKBD	BACKBOARD
BLDG	BUILDING
C	CONDUIT
C.B.	CIRCUIT BREAKER
CD	CANDELA(S)
CEC	CALIFORNIA ENERGY CODE
CF	COMPACT FLUORESCENT
CKT.	CIRCUIT
CLG	CEILING
C.O.	CONDUIT ONLY
CONN.	CONNECTED
C.S.F.M.	CALIFORNIA STATE FIRE MARSHAL
CT	CURRENT TRANSFORMER
DIA	DIAMETER
E	EXISTING
E.C.	ELECTRICAL CONTRACTOR
EF	EXHAUST FSN
ELEC	ELECTRICAL
EM	EMERGENCY
EMS	ENERGY MANAGEMENT SYSTEM
EMT	ELECTRICAL METALLIC TUBING
EOLR	END OF LINE RESISTOR
EPO	EMERGENCY POWER OFF
F	FUSE
FACP	FIRE ALARM CONTROL PANEL
FLA	FULL LOAD AMPS
G.C.	GENERAL CONTRACTOR
GFCI	GROUND FAULT CIRCUIT INTERRUPTER
GFP	GROUND FAULT PROTECTION
GND, GRD	GROUND
HOA	HAND-OFF-AUTO
HID	HIGH INTENSITY DISCHARGE
HP	HORSE POWER
HPS	HIGH PRESSURE SODIUM
IG	ISOLATED GROUND
J-BOX	JUNCTION BOX
KAIC	THOUSAND AMPERES INTERRUPTING CURRENT
KCMIL	THOUSAND CIRCULAR MILS
KEC	KITCHEN EQUIPMENT CONTRACTOR
KVA	KILOVOLT-AMP(S)
KW	KILOWATT(S)
LCL	LONG CONTINUOUS LOAD
LO	LUGS ONLY
LPS	LOW PRESSURE SODIUM
LTG	LIGHTING
LV	LOW VOLTAGE
MCA	MINIMUM CIRCUIT AMPS
MCB	MAIN CIRCUIT BREAKER
MCC	MOTOR CONTROL CENTER
MCM	THOUSAND CIRCULAR MILS
MDP	MAIN DISTRIBUTION PANEL
MFR	MANUFACTURER
MH	METAL HALIDE
MLO	MAIN LUGS ONLY
MSB	MAIN SWITCHBOARD
MTD	MOUNTED
NC	NORMALLY CLOSED
NEC	NATIONAL ELECTRICAL CODE
NF	NON-FUSED
N.F.P.A.	NATIONAL FIRE PROTECTION AGENCY
NIC	NOT IN CONTRACT
NL	NIGHT LIGHT
NO	NORMALLY OPEN
NTS	NOT TO SCALE
O.C.	ON CENTER
OFCI	OWNER-FURNISHED, CONTRACTOR INSTALLED
PA	PUBLIC ADDRESS
PC	PHOTOCELL CONTROLLED
PH/ø	PHASE
P.O.C.	POINT OF CONNECTION
POS	POINT OF SALE
PROVIDE	FURNISH, INSTALL AND CONNECT
R	RELAY
RGS	RIGID GALVANIZED STEEL
SCE	SOUTHERN CALIFORNIA EDISON
SWBD	SWITCHBOARD
TELCO	TELEPHONE COMPANY
TV	TELEVISION
TYP.	TYPICAL
UGPS	UNDERGROUND PULL SECTION
UNO	UNLESS NOTED OTHERWISE
UPS	UNINTERRUPTIBLE POWER SOURCE
V	VOLT(S)
VA	VOLT-AMP(S)
V.D.	VOLTAGE DROP
V.L.	VERIFY LOCATION
W	WATT(S)
WP	WEATHERPROOF
WT	WATER TIGHT
XFMR	TRANSFORMER
1P	SINGLE POLE
2P	DOUBLE POLE
3P	THREE POLE
#	NUMBER

APPROVED
MAY 01 2006
BUILDING & SAFETY
CITY OF FONTANA

APPROVED
REVIEWED BY ______ DATE

Approved of these plans shall not be construed to be a permit for, or an approval of any violation of any of the provisions of the state or of laws. One set of ... be kept ... until completion.

LANGDON WILSON
ARCHITECTURE PLANNING INTERIORS
18800 VON KARMAN AVENUE, SUITE 200
IRVINE, CALIFORNIA 92612-1517
949 - 833 - 9193

GLP Engineering, Inc.
Mechanical and Electrical Engineers
1751 East Garry Avenue
Santa Ana, CA 92705-5814
Telephone (949) 428-8800
Fax (949) 428-8805
GLP # 123.002

CITY OF FONTANA
DEVELOPMENT SERVICES ORGANIZATION BUILDING
8353 SIERRA AVENUE FONTANA, CALIFORNIA

REV.	DATE	ISSUED FOR	REV.	DATE	ISSUED FOR

Stamp
REGISTERED PROFESSIONAL ENGINEER GARY L. PETRAK No. ... Exp. 6-30-06 ELECTRICAL STATE OF CALIFORNIA

DATE 04-14-06 SCALE NONE
DRAWN BY: GLP
JOB NO. L454-000 CADD TITLE 123002_E401
SHEET TITLE: SYMBOLS LIST
SHEET NUMBER: E001

©Copyright 2005 Langdon Wilson

PERMIT SET / BID SET 04-17-06

P:\Clients\Langdon Wilson\Fontana City Hall 123.002\Drawings\123002_E001.dwg Apr 17, 2006 - 7:53am Kathy

GENERAL NOTES

A. SINGLE LINE DIAGRAM:

1. FEEDERS ARE SIZED FOR COPPER WITH 75C. (THHN/THHW) INSULATION.
2. PROVIDE UFER GROUND ELECTRODE CONSISTING OF 30' OF BARE COPPER 4/0 CONDUCTOR LOCATED WITHIN AND NEAR BOTTOM OF EACH BUILDING FOUNDATION WITH 2" MIN. CONCRETE ENCASEMENT. TERMINATE WELD UFER GROUND TO ADJACENT REBAR.
3. ROUTE TRANSFORMER GROUNDS TO SERVING SWITCHBOARDS GROUND BUS THRU SERVING FEEDER CONDUIT.
4. FEEDERS ARE BASED ON USE OF STEEL CONDUIT. PROVIDE CODE SIZED EQUIPMENT AND RACEWAY GROUND WIRES IF PLASTIC CONDUIT IS USED. FEEDER GROUND WIRES SHOWN ARE FOR BUILDING SERVICE GROUNDING.
5. ALL DISTRIBUTION BOARDS SHALL BE PROVIDED WITH GROUND BUS.
6. PROVIDE 4" HIGH CONCRETE HOUSEKEEPING PADS UNDER ALL FLOOR MOUNTED ELECTRICAL EQUIPMENT (INCLUDING SWITCHBOARDS AND TRANSFORMERS).

B. MECHANICAL EQUIPMENT NOTES

1. VERIFY EXACT LOCATION OF MECHANICAL EQUIPMENT CONTRACTOR PRIOR TO INSTALLATION OF CONDUIT.
2. ALL EQUIPMENT, DEVICES, SAFETY SWITCHES, JUNCTION BOXES CONNECTIONS, ETC. MOUNTED ON THE ROOF OR EXTERIOR SHALL BE WEATHERPROOF.
3. REFER TO MECHANICAL DRAWING CONTROL DIAGRAMS FOR ALL SENSORS, TIME CLOCKS, RELAYS, TIMERS, STARTERS, LINE AND LOW VOLTAGE CONDUIT AND PROVIDE AS REQUIRED.
4. SAFETY SWITCHES SHALL BE HORSEPOWER RATED WITH CURRENT LIMITING FUSES, SIZED PER THE MANUFACTURER'S RECOMMENDATION. SWITCHES SHALL HAVE "RK-1" FUSE REJECTION CLIPS.
5. ELECTRICAL PLANS DO NOT INDICATE MECHANICAL AND PLUMBING EQUIPMENT CONTROL. REFER TO MECHANICAL AND PLUMBING PLANS AND SPECIFICATIONS AND PROVIDE ALL CONDUIT, WIRE J-BOXES, OUTLET BOXES RELAY SWITCHES, TIME SWITCHES, CONTROL CIRCUITS, ETC. REQUIRED FOR A COMPLETE AND OPERABLE MECHANICAL AND PLUMBING INSTALLATION. ALL WIRE SHALL BE INSTALLED IN CODE SIZED CONDUIT.
6. LOCATIONS OF SAFETY SWITCHES AND CONNECTIONS FOR MECHANICAL AND PLUMBING EQUIPMENT ARE SHOWN DIAGRAMMATICALLY. VERIFY ACTUAL LOCATIONS WITH EQUIPMENT SHOP DRAWINGS AND LOCATE SAFETY SWITCHES LOCATED TO PROVIDE CODE REQUIRED CLEARANCES AND ACCESS. SAFETY SWITCHES LOCATED ON THE ROOF SHALL BE MOUNTED 30" MINIMUM ABOVE THE ROOF. IF THE MOUNTING OF SWITCHES DIRECTLY TO MECHANICAL EQUIPMENT IS NOT POSSIBLE, PROVIDE ANGLE IRON SUPPORT BRACKETS BOLTED TO THE ROOF FRAMING.

C. FIXTURE NOTES:

1. IT IS THE CONTRACTORS RESPONSIBILITY TO VERIFY ACTUAL CEILING CONSTRUCTION TYPE AS DEFINED ON THE ARCHITECTURAL DRAWINGS AND FURNISH ALL LIGHTING FIXTURES WITH THE CORRECT MOUNTING DEVICES WHETHER OR NOT SUCH VARIATIONS ARE INDICATED BY THE FIXTURE CATALOG NUMBER. THE CONTRACTOR SHALL VERIFY DEPTH OF ALL RECESSED LIGHTING FIXTURES WITH ARCHITECTURAL DRAWINGS PRIOR TO ORDERING FIXTURES. ANY DISCREPANCIES THAT WOULD CAUSE RECESSED FIXTURES NOT TO FIT INTO CEILING SHALL BE REPORTED TO THE ARCHITECT PRIOR TO ORDERING FIXTURES.
2. LIGHT FIXTURES RECESSED IN CEILING WHICH HAVE A ONE HOUR OR MORE FIRE RATING SHALL BE ENCLOSED IN A BOX WHICH HAS A FIRE RATING EQUAL TO THAT OF THE CEILING. PROVIDE MINIMUM OF 3" CLEAR FROM ALL SIDES AND TOP OF RECESSED LIGHT FIXTURES.
3. CEILING INSULATION SHALL BE INSTALLED TO ALLOW 3" MINIMUM CLEARANCE FROM SIDES AND TOP OF RECESSED LIGHT FIXTURES.
4. LAMPS FOR OWNER FURNISHED FIXTURES ARE FURNISHED BY OWNER. INSTALLED IN ELECTRICAL CONTRACT.
5. VERIFY MOUNTING HEIGHT OF ALL WALL MOUNTED FIXTURES WITH ARCHITECT.
6. REFER TO ARCHITECTURAL REFLECTED CEILING PLANS FOR EXACT LOCATION OF ALL LIGHT FIXTURES.
7. VERIFY VOLTAGE BEING SUPPLIED TO FIXTURES PRIOR TO ORDERING.
8. PENDANT MOUNTED FIXTURES SHALL BE ABLE TO SWING UP TO 45° WITHOUT STRIKING ANY OBJECT. IF OBSTRUCTIONS OCCUR, PROVIDE SWAY BRACING AS REQUIRED PER 2001 CBC.

D. SITE PLAN GENERAL NOTES:

1. ALL CONDUIT, STRUCTURES AND INSTALLATION FOR POWER AND TELEPHONE SITE DISTRIBUTION SYSTEM SHALL CONFORM WITH THE REQUIREMENTS OF THE SERVING UTILITY COMPANIES. VERIFY ALL REQUIREMENTS (MINIMUM BEND RADII, CONDUIT DEPTH, CONDUIT TYPE, ETC.) WITH THE UTILITIES PRIOR TO BID AND INCLUDE ALL COSTS IN BID.
2. CONTRACTOR SHALL OBTAIN POWER COMPANY CONSTRUCTION DRAWINGS PRIOR TO CONSTRUCTION AND SHALL INSTALL POWER CONDUIT AND STRUCTURES ACCORDING TO THE POWER COMPANY DRAWINGS.
3. POWER SERVICE CONDUITS SHALL BE FULLY CONCRETE ENCASED WITH RED CONCRETE.
4. VISIT SITE PRIOR TO BID TO REVIEW EXISTING TOPOGRAPHY, LANDSCAPING AND EXISTING CONDITIONS TO BECOME FAMILIAR WITH SLOPE CONDITIONS, EXISTING CONSTRUCTION AND LANDSCAPING. ADJUST CONDUIT ROUTING INDICATED TO AVOID RUNNING IN SLOPE CONDITIONS, TO MISS TREES AND TO AVOID DISTURBING EXISTING CONSTRUCTION WHERE POSSIBLE. REPAIR OR REPLACE ALL SPRINKLER SYSTEMS, CONDUIT WIRING, PIPING, ETC. DAMAGED BY ELECTRICAL WORK. RECONNECT EXISTING TO MAINTAIN COMPLETE AND OPERABLE SYSTEMS.
5. ELECTRICAL CONTRACTOR SHALL EXERCISE EXTREME CAUTION IN EXCAVATING AND TRENCHING ON THIS SITE TO AVOID EXISTING DUCTS, PIPING OR CONDUITS, ETC., AND TO PREVENT HAZARD TO PERSONNEL AND/OR DAMAGE TO EXISTING UNDERGROUND UTILITIES OR STRUCTURES. THE ENGINEER IS NOT RESPONSIBLE FOR THE LOCATION OF UNDERGROUND UTILITIES OR STRUCTURES, WHETHER OR NOT SHOWN OR DETAILED AND INSTALLED BY THIS OR ANY OTHER CONTRACTS. THE CONTRACTOR SHALL IMMEDIATELY NOTIFY THE OWNER SHOULD SUCH UNIDENTIFIED CONDITIONS BE DISCOVERED. THESE DRAWINGS AND SPECIFICATIONS DO NOT INCLUDE NECESSARY COMPONENTS FOR CONSTRUCTION SAFETY.
6. ALL EQUIPMENT, DEVICES, DISCONNECT SWITCHES, JUNCTION BOXES, CONNECTIONS, ETC., EXTERIOR TO THE BUILDING SHALL BE WEATHERPROOF.
7. SIGNAL CONDUITS SHALL BE SEPARATED FROM POWER CONDUITS +12" MINIMUM.

E. GENERAL NOTES:

1. PROVIDE EXPANSION AND DEFLECTION FITTINGS WITH BONDING JUMPER ON ALL CONDUITS AT ALL BUILDING EXPANSION OR SEISMIC JOINT CROSSING.
2. THE TOP OF ALL FLOOR STANDING SERVICE AND SWITCHBOARD EQUIPMENT SHALL BE BOLTED TO THE WALL WITHIN 3 FEET OF EACH END WITH 1/4" THICK ANGLE IRON OF P1000 UNISTRUT AND FITTINGS.
3. PROVIDE GROUND WIRE IN ALL POWER CONDUITS.

F. COMMUNICATION SYSTEM NOTES:

1. AC ELECTRICAL CIRCUITS: ALL DEDICATED CIRCUITS IN DATA ROOMS TO HAVE DEDICATED NEUTRALS AND GROUND CONDUCTORS.
2. GROUNDING AND BONDING:
   a. PROVIDE A 2" CONDUIT FROM THE BUILDING SERVICE GROUND TO THE 1ST FLOOR DATA ROOM. INCLUDE A GROUND CONDUCTOR SIZED TO 2,000 CIRCULAR MILS PER FOOT. TERMINATE ON BUILDING SERVICE GROUND BUS USING COMPRESSION LUGS OR EXOTHERMIC WELD.
   b. PROVIDE A 2" CONDUIT FROM THE 1ST FLOOR DATA ROOM TO THE 2ND FLOOR DATA ROOM. INCLUDE A GROUND CONDUCTOR SIZED TO 2,000 CIRCULAR MILS PER FOOT. CONDUITS MUST BE BONDED TO THE BONDING CONDUCTOR AT EACH END OR TO EACH LOCATION'S GROUND BUS BAR. PROVIDE GROUND COLLARS ON THE END OF CONDUITS.
3. CONDUITS AND SLEEVES:
   a. CONDUITS THAT RISE FROM THE FLOOR NEED TO RISE 4'-6" AFF.
   b. CONDUITS THAT FALL FROM CEILING SPACE SHOULD BE EXTENDED HORIZONTALLY THROUGH THE WALL NO MORE THAN 4 INCHES. IF VERTICAL, THEY SHALL EXTEND ONTO THE TOP OF THE BACKBOARD BY 2'-4".
   c. BUSHINGS REQUIRED ON ALL CONDUIT ENDS.
   d. CONDUIT BENDS TO BE A MAXIMUM OF 180 DEGREES.
   c. THE BENDING RADII OF CONDUIT IS TO BE 10 TIMES THE CONDUIT'S INTERNAL DIAMETER.
4. THE ELECTRICAL CONTRACTOR SHALL REVIEW THE TELECOMMUNICATION DRAWINGS, SHEET T001 THROUGH T401, PRIOR TO BID AND SHALL PROVIDE ALL CONDUIT, BOXES, CONDUCTORS, POWER CONNECTIONS, ETC. SHOWN ON THESE DRAWINGS IN THE BID. THE ELECTRICAL CONTRACTOR SHALL PERFORM ALL WORK SHOWN AS REQUIRED FOR A COMPLETE SYSTEM.

F. AUDIOVISUAL SYSTEM NOTES:

1. THE ELECTRICAL CONTRACTOR SHALL REVIEW THE AUDIOVISUAL DRAWINGS, SHEET AV001 THROUGH AV202P, PRIOR TO BID AND SHALL PROVIDE ALL CONDUIT, BOXES, CONDUCTORS, POWER CONNECTIONS, ETC. SHOWN ON THESE DRAWINGS IN THE BID. THE ELECTRICAL CONTRACTOR SHALL PERFORM ALL WORK SHOWN AS REQUIRED FOR A COMPLETE SYSTEM.

FIXTURE SCHEDULE

TYPE	DESCRIPTION	TOTAL WATTS	LAMP QUAN	LAMP WATTS	LAMP TYPE	MOUNTING
A	4' 1-LAMP, WALL MOUNTED INDIRECT/DIRECT PERFORATED FLUORESCENT FIXTURE, EXTRUDED ALUMINUM HOUSING. TEXTURED MATTE WHITE FINISH IN COLOR. PRUDENTIAL LIGHTING# WAL-WV-P-1T8-04-TMW-SERIES. [1]	25	1	32	SYLVANIA F032/835XPS/ ECO	WALL
B	FLUORESCENT INDIRECT/DIRECT PENDANT MOUNTED, 3-LAMP PERFORATED FIXTURE, EXTRUDED ALUMINUM HOUSING. TEXTURED MATTE WHITE FINISH IN COLOR. PRUDENTIAL LIGHTING# WV-P-3T8-R-TMW-SERIES. [1] [2]	69	3	32	SYLVANIA F032/835XPS/ ECO	PENDANT
C	2'x4' FLUORESCENT WITH RECESSED CENTER BASKET. DAY-BRITE LIGHTING# 2AVG232-PMW-1/3-EB-SERIES. [1]	46	2	32	SYLVANIA F032/835XPS/ ECO	RECESSED
D	2'x4' FLUORESCENT WITH RECESSED CENTER BASKET WITH 90 MINUTE, 1100 LUMEN BATTERY PACK. DAY-BRITE LIGHTING# 2AVG232-PMW-EB-E5ST-SERIES. [1]	46	2	32	SYLVANIA F032/835XPS/ ECO	RECESSED
E	1'x4' FLUORESCENT WITH RECESSED CENTER BASKET. DAY-BRITE LIGHTING# 1AV232-PMW-1/2-EB-SERIES. [1]	46	2	32	SYLVANIA F032/835XPS/ ECO	RECESSED
F	1'x4' FLUORESCENT WITH RECESSED CENTER BASKET WITH 90 MINUTE, 1100 LUMEN BATTERY PACK. DAY-BRITE LIGHTING# 1AVG232-PMW-EB-E5ST-SERIES. [1]	46	2	32	SYLVANIA F032/835XPS/ ECO	RECESSED
G	2'x2' FLUORESCENT WITH RECESSED CENTER BASKET. DAY-BRITE LIGHTING# 1A2CF40-PMW-1/2-EB-SERIES.	78	2	40	CF40	RECESSED
H	2'x2' FLUORESCENT WITH RECESSED CENTER BASKET WITH 90 MINUTE, 1100 LUMEN BATTERY PACK. DAY-BRITE LIGHTING# 2AVG2CF40-PMW-EB-E5ST-SERIES.	78	2	40	CF40	RECESSED
J	FLUORESENT DOWNLIGHT, 8" APERATURE WITH CLEAR SPECULAR REFLECTOR. OMEGA #OM82H26PLT-CS	60	2	26	TRIPLE TUBE	RECESSED
K	FLUORESENT DOWNLIGHT, 8" APERATURE WITH CLEAR SPECULAR REFLECTOR WITH 90 MINUTE BATTERY PACK OMEGA #OM82H26PLT-CS-EM	60	2	26	TRIPLE TUBE	RECESSED
M	FLUORESCENT WALLWASH, 6" APERATURE OMEGA #S6-2H18QPL-U-T6-2HQPL-WW-CS-FF	45	2	18	CFQ	RECESSED
N	LED EDGE LIT EXIT SIGN, RED LETTERS, CLEAR BACKGROUND. PROVIDE MOUNTING, ARROWS AND NUMBER OF FACES AS REQUIRED. WITH 90 MINUTE EMERGENCY BATTERY PACK. McPHILBEN #45VL-X-RC-20	10	–	–	LED	SURFACE
P	2'x4' FLUORESCENT WITH ACRYLIC PRISMATIC LENS. DAYBRITE #2DPG323-FS12-SERIES [1]	46	2	32	SYLVANIA F032/835XPS/ ECO	RECESSED
R	4' FLUORESCENT WITH WRAP AROUND PRISMATIC LENS. DAYBRITE #DWN232T81/2EB [1]	46	2	32	SYLVANIA F032/835XPS/ ECO	RECESSED
S	4' FLUORESCENT STRIP LIGHT WITH WIREGUARD. DAYBRITE #T-232-CG-4-1/2EB [1]	46	2	32	SYLVANIA F032/835XPS/ ECO	SURFACE
T	4' FLUORESCENT STRIP LIGHT. DAYBRITE #TN132 [1]	25	1	32	SYLVANIA F032/835XPS/ ECO	SURFACE
U	H.I.D. POLE TOP WITH ALUMINUM COVER AND SHADE AND TYPE V SILVER LOUVER IWTH 10' STRAIGHT STEEL POLE. FINISH AND COLOR PER ARCHITECT. SELUX #SA2-SP-1-H100-120	130	1	100	METAL HALIDE	POLE, SEE DETAIL "7", SHEET E006
V	SIMILAR TO TYPE "U" EXCEPT WALL MOUNTED. SELUX #SA3-SP-W-H100-120	130	1	100	METAL HALIDE	WALL
W	INDIRECT/DIRECT FLUORESCNET WITH MICROPRISM LENS. ZUMTOBEL STAFF #ARS-2545-4-C70	108	2	54	T5HO	PENDANT
X	H.I.D. PENDANT WITH INTERNAL REFLECTOR. POULSON #CHA-1/70W/CMH/ED-17-OMEDIUM-GREYALU-MEDIUM-ALU	95	1	70	CMH ED-17	PENDANT
Y	14" DIA. WALL SCONCE WITH WHITE OPAL GLASS LENS. POULSON #AJE-13.7-2/26-GLASS-WALL	52	2	26	26W/ CFQX24	SURFACE
Z	11" DIA. STEP LIGHT WITH CAST ALUMINUM HOUSING. FINISH AND COLOR PER ARCHITECT. GARDCO #945-C-50MH-LV	67	1	50	METAL HALIDE	RECESSED
AA	METAL HALIDE POLE TOP WITH DIECAST ALUMINUM HOUSING. TYPE 4X DISTRIBUTION WITH 12' SQUARE STEEL POLE. GARDCO #G13-1-4XL-150MH	190	1	150	METAL HALIDE	POLE, SEE DETAIL "4", SHEET E006
BB	EMERGENCY LIGHTING UNIT WITH RETRACTABLE LAMPS AND 90 MINUTE EMERGENCY BATTERY PACK. PAINT TO MATCH SURROUNDING FINISH. CONCEALITE #F5-75-90	150	2	75	MR16	RECESSED
CC	LOW VOLTAGE TRACK WITH DIE-CAST ALUMINUM HOUSING AND INTEGRAL TRANSFORMER. WHITE FINISH. PROVIDE QUANTITY OF FIXTURES AS SHOWN ON PLAN. PROVIDE SINGLE CIRCUIT RECESSED TRACK, LENGTH AS SHOWN ON PLAN. FIXTURE: ZUMTOBEL STAFF #908-1-WH TRACK: #58081WH-58481WH	50	1	50	MR16	TRACK
DD	H.I.D. DOWNLIGHT WITH PRISMATIC LENS AND 10" APERATURE. OMEGA #OM10H100ED17MHSPL-PL	130	1	100	METAL HALIDE	RECESSED

[1] FIXTURE SHALL BE EQUIPPED WITH SYLVANIA BALLAST # QTP?x32T8/UNVPSXSC AS REQUIRED FOR LAMP AND SWITCHING CONFIGURATION.

[2] E.C. SHALL VERIFY LENGTH AS SHOWN ON PLANS. PROVIDE ALL NECESSARY LAMPS, BALLASTS, SUPPORTS, ETC. AS REQUIRED.

LANGDON WILSON
ARCHITECTURE
PLANNING
INTERIORS

18800 VON KARMAN AVENUE, SUITE 200
IRVINE, CALIFORNIA 92612-1517
949 · 833 · 9193

GLP Engineering, Inc.
Mechanical and Electrical Engineers
1751 East Garry Avenue
Santa Ana, CA 92705-5814
Telephone (949) 428-8800
Fax (949) 428-8805
GLP # 123.002

CITY OF FONTANA
DEVELOPMENT SERVICES
ORGANIZATION BUILDING
8353 SIERRA AVENUE FONTANA, CALIFORNIA

REV.	DATE	ISSUED FOR	REV.	DATE	ISSUED FOR

Stamp

APPROVED
MAY 0 1 2006
BUILDING & SAFETY
CITY OF FONTANA

REVIEWED BY

Approved of these … construed to be … approval of any … the provisions … laws. One set of ap… be kept on the job until completion.
WILLDAN

DATE: 04-14-06 SCALE: NONE
DRAWN BY: GLP
JOB NO. L454-000 CADD TITLE: 123002_E401

SHEET TITLE:
FIXTURE SCHEDULE AND GENERAL NOTES

SHEET NUMBER:
E002

©Copyright 2005 Langdon Wilson

PERMIT SET / BID SET 04-17-06

P:\Clients\Langdon Wilson\Fontana City Hall 123.002\Drawings\123002_E002.dwg Apr 17, 2006 - 7:53am Kathy

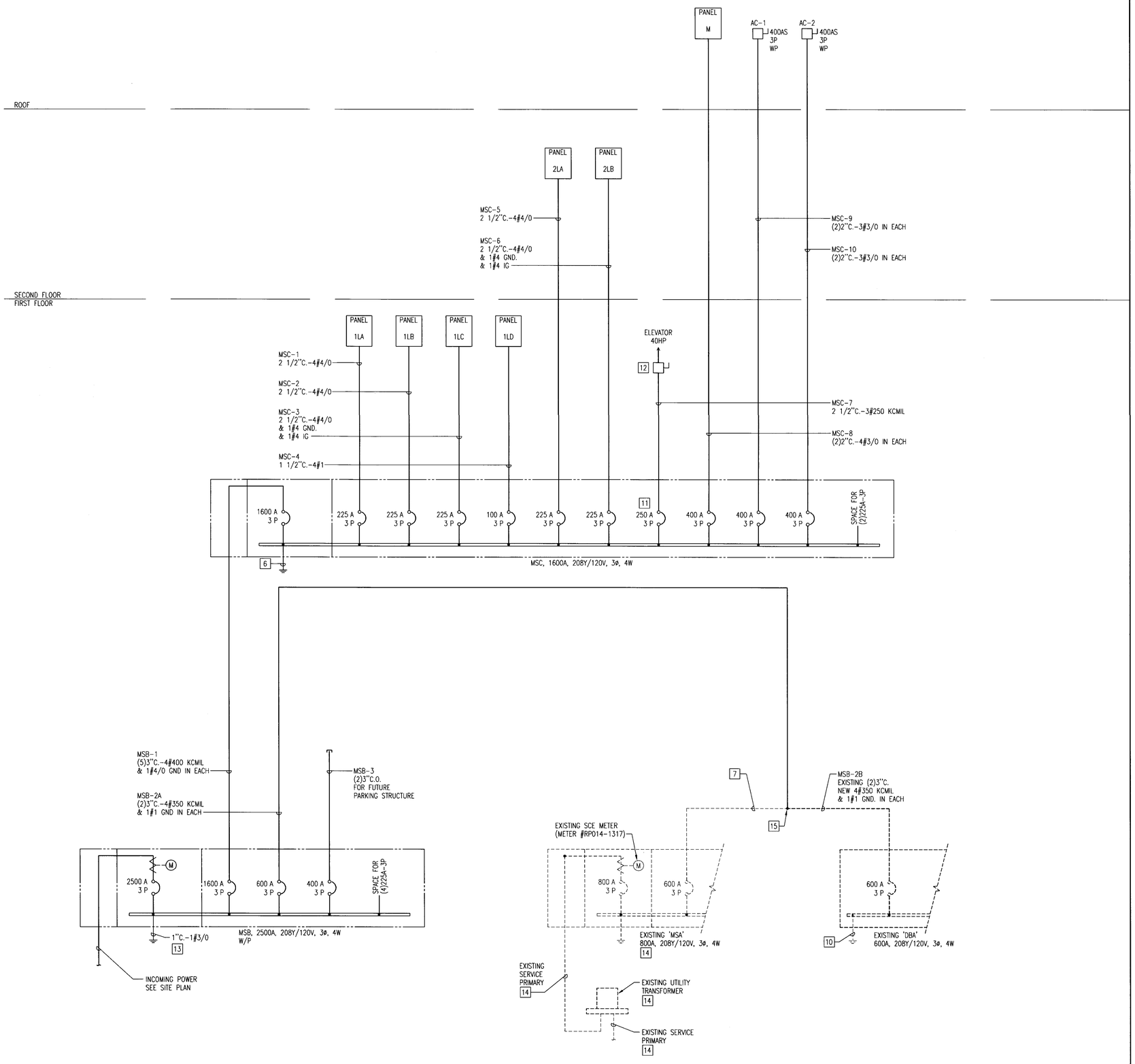

SINGLE LINE DIAGRAM NOTES:

1. ALL CIRCUIT BREAKERS (MAIN SWITCHBOARD, DISTRIBUTION PANELS, AND PANELBOARDS) SHALL BE SERIES RATED FOR 42,000 AIC OR APPROVED EQUAL UNLESS NOTED OTHERWISE.
2. ALL FEEDERS INDICATED ARE COPPER "THWN/THHN".
3. EQUIPMENT ENCLOSURES SHALL BE CLEARLY MARKED "CAUTION: SERIES RATED SYSTEM-42,000 AMPS AVAILABLE. IDENTIFIED REPLACEMENT COMPONENTS REQUIRED.", IN COMPLIANCE WITH 2001 CEC SECTION 110-22. END-USE EQUIPMENT SHALL ALSO BE MARKED WITH THE HIGHER SERIES COMBINATION INTERRUPTING RATING AS PER 2001 CEC SECTION 240-83C.
4. ELECTRICAL SYSTEMS SHALL BE GROUNDED PER ARTICLE 250 OF THE CALIFORNIA ELECTRICAL CODE.
5. MAXIMUM AVAILABLE FAULT CURRENT FROM THE SERVING UTILITY IS 42,000 AMPS

6. 1"C.-1#3/0 TO COLD WATER PIPE (WITHIN 5 FEET OF WATER LINE ENTERING BUILDING), 1"C.-1#3/0 TO BUILDING STEEL AND 1#3/0 UFER GROUND.

7. CONTRACTOR SHALL REMOVE EXISTING CONDUCTORS FOR ENTIRE RUN.

8. NOT USED.

9. DISCONNECT AND REMOVE EXISTING SERVICE ENTRANCE CONDUCTORS PER SCE REQUIREMENTS.

10. CONTRACTOR SHALL DISCONNECT EXISTING EARTH ELECTRODE AND BONDING JUMPER TO INTERIOR METAL PIPING SYSTEMS. CONNECT NEW INCOMING GROUNDING CONDUCTORS TO EXISTING GROUND BUS.

11. PROVIDE SHUNT TRIP TYPE CIRCUIT BREAKER. INTERLOCK WITH ELEVATOR SHAFT HEAT DETECTOR. SEE ELEVATOR ELECTRICAL REQUIREMENTS, SHEET E005.

12. 400A-3P FUSED DISCONNECT SWITCH. SIZE FUSES PER ELEVATOR MANUFACTURERS REQUIREMENTS. SEE ELEVATOR ELECTRICAL REQUIREMENTS, SHEET E005.

13. PROVIDE 12"W x 12"D BOTTOMLESS CONCRETE PULLBOX WITH PEA GRAVEL BASE AND 10'x3/4" DIAMETER COPPER CLAD STEEL GROUND ROD. MOUNT PULLBOX FLUSH IN GRADE AND ENGRAVE "GROUND". QUANTITY AS REQUIRED TO ACHIEVE 25 OHMS TO GROUND MAXIMUM. GROUND RODS TO BE A MINIMUM OF 6 FEET APART.

14. EXISTING EQUIPMENT TO BE REMOVED. COORDINATE WITH SCE AND OWNER. PRIOR TO THE DISCONNECTION AND/OR SHUT DOWN OF ANY POWER THE CONTRACTOR SHALL SCHEDULE THE TIME WITH THE OWNER AND RECEIVE APPROVAL IN WRITING FROM THE OWNER APPROVING THE SCHEDULE. THE CONTRACTOR SHALL PROVIDE POWER TO THE EXISTING FACILITY DURING THE SCHEDULED SHUT DOWN VIA A PORTABLE TRUCK MOUNTED GENERATOR. THE TEMPORARY GENERATOR SHALL BE SIZED FOR A MINIMUM OF 250KVA. THE CONTRACTOR SHALL PROVIDE ALL NECESSARY CABLES, CONNECTIONS TO EXISTING SWITCHBOARD "DBA", FUEL, ETC. FOR A COMPLETE SYSTEM NECESSARY TO OPERATE THE FACILITY. ALL ASSOCIATED COSTS FOR THIS WORK SHALL BE INCLUDED IN THE BID.

15. CONTRACTOR SHALL INTERCEPT EXISTING CONDUIT AND EXTEND AS REQUIRED. VERIFY INTERCEPT LOCATION IN FIELD.

SINGLE LINE DIAGRAM

N.T.S.

LANGDON WILSON
ARCHITECTURE
PLANNING
INTERIORS

18800 VON KARMAN AVENUE, SUITE 200
IRVINE, CALIFORNIA 92612-1517
949 - 833 - 9193

GLP Engineering, Inc.
Mechanical and Electrical Engineers
1751 East Garry Avenue
Santa Ana, CA 92705-5814
Telephone (949) 428-8800
Fax (949) 428-8805
GLP # 123.002

CITY OF FONTANA
DEVELOPMENT SERVICES
ORGANIZATION BUILDING
8353 SIERRA AVENUE FONTANA, CALIFORNIA

REV.	DATE	ISSUED FOR	REV.	DATE	ISSUED FOR

Stamp

REGISTERED PROFESSIONAL ENGINEER
RAY L. PETRAY
No. E-3550
Exp. 6-30-06
ELECTRICAL
STATE OF CALIFORNIA

APPROVED
MAY 01 2006
BUILDING & SAFETY
CITY OF FONTANA

REVIEWED BY

Approved of under these conditions shall not be construed to be a waiver of any violation of any of the provisions of the state or local laws. One set of approved plans shall be kept on the job until completion.
WILLDAN

DATE: 04-14-06 SCALE: NONE
DRAWN BY: GLP
JOB NO. L454-000 CADD TITLE 123002_E401

SHEET TITLE:
SINGLE LINE DIAGRAM

SHEET NUMBER:
E003

©Copyright 2005 Langdon Wilson

PERMIT SET / BID SET 04-17-06

P:\Clients\Langdon Wilson\Fontana City Hall 123.002\Drawings\123002_E003.dwg Apr 17, 2006 - 7:52pm Kathy

P:\Clients\Langdon Wilson\Fontana City Hall 123.002\Drawings\123002_E004.dwg Apr 17, 2006 - 7:52am Kathy

PANEL: M
LOCATION: ROOF TOP
MOUNTING: SURFACE (NEMA 3R)
PANELVOLTAGE: 120/208 3P, 4W
BUS: 400A
MAIN: L.O.
AIC RATING: 42,000 SERIES RATED
CIRCUIT CODE (CC): N : NON-CONTINUOUS; L : LONG-CONTINUOUS; R: DEMANDABLE RECEPTACLES; K: KITCHEN

CKT NO.	VA LOAD A	VA LOAD B	VA LOAD C	LOAD DESCRIPTION	CC	TYPE CNT. M	TYPE CNT. R	TYPE CNT. L	C. B. TR	C. B. P	BUS A	BUS B	BUS C	C. B. TR	C. B. P	TYPE CNT. L	TYPE CNT. R	TYPE CNT. M	CC	LOAD DESCRIPTION	VA LOAD A	VA LOAD B	VA LOAD C	CKT NO.
1	900			P-1	N	1			15	3	X			20	1		4		R	ROOF RECEPTACLES	720			2
3		900		----------	N	--			--	--		X		15	1			1	N	B-1		830		4
5			900	----------	N	--			--	--			X	20	1					SPARE				6
7	696			EF-1	N	1			15	3	X			20	1					SPARE				8
9		696		----------	N	--			--	--		X		20	1					SPARE				10
11			696	----------	N	--			--	--			X							SPACE				12
13	1446			CU-1	N	1			20	2	X									SPACE				14
15		1446		----------	N	--			--	--		X								SPACE				16
17			506	EF-2	N	1			15	1			X							SPACE				18
19				SPACE							X									SPACE				20
21				SPACE								X								SPACE				22
23				SPACE									X							SPACE				24
25				SPACE							X									SPACE				26
27				SPACE								X								SPACE				28
29				SPACE									X							SPACE				30
31				SPACE							X									SPACE				32
33				SPACE								X								SPACE				34
35				SPACE									X							SPACE				36
37				SPACE							X									SPACE				38
39				SPACE								X								SPACE				40
41				SPACE									X							SPACE				42
	3042	3042	2102	PHASE TOTALS																PHASE TOTALS	720	830		

Total Phase A: 3762
Total Phase B: 3872
Total Phase C: 2102

CONNECTED VA (CODE N): 9016
CONNECTED VA (CODE L):
CONNECTED VA (CODE R): 720
CONNECTED VA (CODE K):
TOTAL CONNECTED KVA: 9.8
DEMAND KVA:
TOTAL ADJUSTED KVA: 9.8
TOTAL PANEL AMPS: 32.3
AMPS W/LCL: 32.3

3/24/06 11:05 AM

PANEL: 2LA
LOCATION: ELECTRICAL CLOSET 224
MOUNTING: SURFACE
PANELVOLTAGE: 120/208 3P, 4W
BUS: 225A
MAIN: L.O.
AIC RATING: 42,000 SERIES RATED
CIRCUIT CODE (CC): N : NON-CONTINUOUS; L : LONG-CONTINUOUS; R: DEMANDABLE RECEPTACLES; K: KITCHEN

CKT NO.	VA LOAD A	VA LOAD B	VA LOAD C	LOAD DESCRIPTION	CC	TYPE CNT. M	TYPE CNT. R	TYPE CNT. L	C. B. TR	C. B. P	BUS A	BUS B	BUS C	C. B. TR	C. B. P	TYPE CNT. L	TYPE CNT. R	TYPE CNT. M	CC	LOAD DESCRIPTION	VA LOAD A	VA LOAD B	VA LOAD C	CKT NO.
1	1260			RECEPTACLES #215 THRU 223	R		7		20	1	X			20	1			1	N	OPEN OFFICE FURNITURE	1200			2
3		1260		RECEPTACLES #215 THRU 223	R		7		20	1		X		20	1			1	N	OPEN OFFICE FURNITURE		1200		4
5			1260	RECEPTACLES #215 THRU 223	R		7		20	1			X	20	1			1	N	OPEN OFFICE FURNITURE			1200	6
7	1260			RECEPTACLES #206 THRU 214	R		7		20	1	X			20	1			1	N	OPEN OFFICE FURNITURE	1200			8
9		1260		RECEPTACLES #206 THRU 214	R		7		20	1		X		20	1			1	N	OPEN OFFICE FURNITURE		1200		10
11			1260	RECEPTACLES #206 THRU 214	R		7		20	1			X	20	1			1	N	OPEN OFFICE FURNITURE			1200	12
13	1260			RECEPTACLES #210 & COFFEE	R		7		20	1	X			20	1			1	N	OPEN OFFICE FURNITURE	1200			14
15		1200		COPIER	N		1		20	1		X		20	1			1	N	OPEN OFFICE FURNITURE		1200		16
17			1200	REFRIGERATOR	N		1		20	1			X	20	1			1	N	OPEN OFFICE FURNITURE			1200	18
19	1260			RECEPTACLES #200 THRU 205 & 228	R		7		20	1	X			20	1			1	N	OPEN OFFICE FURNITURE	1200			20
21		1260		RECEPTACLES #200 THRU 205 & 228	R		7		20	1		X		20	1			1	N	OPEN OFFICE FURNITURE		1200		22
23			1260	RECEPTACLES #200 THRU 205 & 228	R		7		20	1			X	20	1			1	N	OPEN OFFICE FURNITURE			1200	24
25	1260			RECEPTACLES #225 THRU 227	R		7		20	1	X			20	1			1	N	OPEN OFFICE FURNITURE	1200			26
27		1260		RECEPTACLES #225 THRU 227	R		7		20	1		X		20	1			1	N	OPEN OFFICE FURNITURE		1200		28
29			1200	REFRIGERATOR	N		1		20	1			X	20	1			1	N	OPEN OFFICE FURNITURE			1200	30
31	1200			MICROWAVE	N		1		20	1	X			20	1			1	N	OPEN OFFICE FURNITURE	1200			32
33		1200		PLOTTER	N		1		20	1		X		20	1					SPARE				34
35			1200	PLOTTER	N		1		20	1			X	20	1					SPARE				36
37	180			RECEPTACLE	R		1		20	1	X									SPACE				38
39				SPARE					20	1		X								SPACE				40
41			950	VAV BOXES	N	19			20	1			X							SPACE				42
	7680	7440	8330	PHASE TOTALS																PHASE TOTALS	7200	6000	6000	

Total Phase A: 14880
Total Phase B: 13440
Total Phase C: 14330

CONNECTED VA (CODE N): 27350
CONNECTED VA (CODE L):
CONNECTED VA (CODE R): 15300
CONNECTED VA (CODE K):
TOTAL CONNECTED KVA: 42.7
DEMAND KVA: -2.7
TOTAL ADJUSTED KVA: 40.1
TOTAL PANEL AMPS: 111.4
AMPS W/LCL: 111.4

3/24/06 11:06 AM

PANEL: 2LB
LOCATION: ELECTRICAL CLOSET 224
MOUNTING: SURFACE
PANELVOLTAGE: 120/208 3P, 4W
BUS: 225A
MAIN: L.O.
AIC RATING: 42,000 SERIES RATED
CIRCUIT CODE (CC): N : NON-CONTINUOUS; L : LONG-CONTINUOUS; R: DEMANDABLE RECEPTACLES; K: KITCHEN

CKT NO.	VA LOAD A	VA LOAD B	VA LOAD C	LOAD DESCRIPTION	CC	TYPE CNT. M	TYPE CNT. R	TYPE CNT. L	C. B. TR	C. B. P	BUS A	BUS B	BUS C	C. B. TR	C. B. P	TYPE CNT. L	TYPE CNT. R	TYPE CNT. M	CC	LOAD DESCRIPTION	VA LOAD A	VA LOAD B	VA LOAD C	CKT NO.
1	1500			COPY MACHINE	N	1			30	2	X			20	1	24			L	OFFICE/STORAGE/RESTROOM LIGHTS	1424			2
3		1500		----------	N	--			--	--		X		20	1	20			L	OFFICE LIGHTS		1420		4
5			1500	COPY MACHINE	N	1			30	3			X	20	1	18			L	OPEN OFFICE LIGHTS *			1278	6
7	1500			----------	N	--			--	--	X			20	1	20			L	OPEN OFFICE LIGHTS *	1420			8
9		1500		COPY MACHINE	N	1			30	2		X		20	1	9			L	OPEN OFFICE LIGHTS *		646		10
11			1500	----------	N	--			--	--			X	20	1	21			L	EMERGENCY LIGHTS			1274	12
13	540			COUNTER RECEPTACLES	R		3		20	1	X			20	1	9			L	CONF. ROOM #227 *	513			14
15		1200		OPEN OFFICE FURNITURE	N	1			20	1		X		20	1	20			L	OPEN OFFICE LIGHTS *		1420		16
17			1200	OPEN OFFICE FURNITURE	N	1			20	1			X	20	1	21			L	OFFICE / CONF. STORAGE LIGHTS			1447	18
19	1200			OPEN OFFICE FURNITURE	N	1			20	1	X			20	1	9			L	EMERGENCY LIGHTS	566			20
21		1200		OPEN OFFICE FURNITURE	N	1			20	1		X		20	1	10			L	LOBBY #200 & CONF #228 *		606		22
23				SPACE									X	20	1	10			L	OPEN OFFICE LIGHTS *			686	24
25				SPACE							X			20	1	11			L	CORRIDORS, STAIRS & ELEV. LOBBY *	818			26
27				SPACE								X		20	1	5			L	EXTERIOR WALL EAST *		650		28
29				SPACE									X	20	1					SPARE				30
31				SPACE							X			20	1					SPARE				32
33				SPACE								X		20	1					SPARE				34
35				SPACE									X	20	1					SPARE				36
37				SPACE							X			20	1					SPARE				38
39				SPACE								X		20	1					SPARE				40
41				SPACE									X	20	1					SPARE				42
	4740	5400	4200	PHASE TOTALS																PHASE TOTALS	4741	4742	4685	

Total Phase A: 9481
Total Phase B: 10142
Total Phase C: 8885

PROVIDE ISOLATED GROUND BUSS.
* - CONTROL VIA LIGHTING CONTROL PANEL "LCP".

CONNECTED VA (CODE N): 13800
CONNECTED VA (CODE L): 14168
CONNECTED VA (CODE R): 540
CONNECTED VA (CODE K):
TOTAL CONNECTED KVA: 28.6
DEMAND KVA:
TOTAL ADJUSTED KVA: 28.6
TOTAL PANEL AMPS: 84.6
AMPS W/LCL: 94.5

3/24/06 12:47 PM

PANEL: 1LA
LOCATION: ELECTRICAL ROOM 107
MOUNTING: SURFACE
PANELVOLTAGE: 120/208 3P, 4W
BUS: 225A
MAIN: L.O.
AIC RATING: 42,000 SERIES RATED
CIRCUIT CODE (CC): N : NON-CONTINUOUS; L : LONG-CONTINUOUS; R: DEMANDABLE RECEPTACLES; K: KITCHEN

CKT NO.	VA LOAD A	VA LOAD B	VA LOAD C	LOAD DESCRIPTION	CC	TYPE CNT. M	TYPE CNT. R	TYPE CNT. L	C. B. TR	C. B. P	BUS A	BUS B	BUS C	C. B. TR	C. B. P	TYPE CNT. L	TYPE CNT. R	TYPE CNT. M	CC	LOAD DESCRIPTION	VA LOAD A	VA LOAD B	VA LOAD C	CKT NO.
1	1200			VENDING MACHINE	N		1		20	1	X			20	1		5		R	RECEPTACLES #115,116,100,125	900			2
3		1200		VENDING MACHINE	N		1		20	1		X		20	1		7		R	RECEPTACLES #115,116,100,125		1260		4
5			1200	VENDING MACHINE	N		1		20	1			X	20	1		7		R	RECEPTACLES #115,116,100,125			1260	6
7	1200			VENDING MACHINE	N		1		20	1	X			20	1					SPARE				8
9		900		BREAKROOM RECEPTACLES	R		5		20	1		X		20	1					SPARE				10
11			900	BREAKROOM RECEPTACLES	R		5		20	1			X	20	1					SPARE				12
13	1200			MICROWAVE	N		1		20	1	X			20	1		5		R	RECEPTACLES #105,106,126,126,136	900			14
15		1200		DISH WASHER	N		1		20	1		X		20	1		5		R	RECEPTACLES #105,106,126,126,136		900		16
17			1200	GARBAGE DISPOSAL	N		1		20	1			X	20	1		6		R	RECEPTACLES #105,106,126,126,136			1080	18
19	1200			REFRIGERATOR	N		1		20	1	X			20	1			1	N	OPEN OFFICE FURNITURE	1200			20
21		720		RECEPTACLES RM #109, 110, 111, 112	R		4		20	1		X		20	1			1	N	OPEN OFFICE FURNITURE		1200		22
23			720	RECEPTACLES RM #109, 110, 111, 112	R		4		20	1			X	20	1			1	N	OPEN OFFICE FURNITURE			1200	24
25	720			RECEPTACLES RM #109, 110, 111, 112	R		4		20	1	X			20	1			1	N	OPEN OFFICE FURNITURE	1200			26
27		1200		OPEN OFFICE FURNITURE	N	6			20	1		X		20	1			1	N	OPEN OFFICE FURNITURE		1200		28
29			1200	OPEN OFFICE FURNITURE	N	6			20	1			X	20	1			1	N	OPEN OFFICE FURNITURE			1200	30
31	1200			OPEN OFFICE FURNITURE	N	6			20	1	X			20	1			1	N	OPEN OFFICE FURNITURE	1200			32
33		1200		OPEN OFFICE FURNITURE	N	6			20	1		X		20	1			1	N	OPEN OFFICE FURNITURE		1200		34
35			1260	RECEPTACLES #113,114,119,120,121,123,124	R		7		20	1			X	20	1			1	N	OPEN OFFICE FURNITURE			1200	36
37	1260			RECEPTACLES #113,114,119,120,121,123,124	R		7		20	1	X			20	1			1	N	OPEN OFFICE FURNITURE	1200			38
39		1260		RECEPTACLES #113,114,119,120,121,123,124	R		7		20	1		X		20	1			1	N	OPEN OFFICE FURNITURE		1200		40
41			1200	REFRIGERATOR	N		1		20	1			X	20	1			1	N	OPEN OFFICE FURNITURE			1200	42
	7980	7680	7680	PHASE TOTALS																PHASE TOTALS	6600	6960	7140	

Total Phase A: 14580
Total Phase B: 14640
Total Phase C: 14820

CONNECTED VA (CODE N): 30000
CONNECTED VA (CODE L):
CONNECTED VA (CODE R): 14040
CONNECTED VA (CODE K):
TOTAL CONNECTED KVA: 44.1
DEMAND KVA: -2.1
TOTAL ADJUSTED KVA: 42.1
TOTAL PANEL AMPS: 117.0
AMPS W/LCL: 117.0

3/24/06 12:47 PM

PANEL: 1LB
LOCATION: ELECTRICAL ROOM 107
MOUNTING: SURFACE
PANELVOLTAGE: 120/208 3P, 4W
BUS: 225A
MAIN: L.O.
AIC RATING: 42,000 SERIES RATED
CIRCUIT CODE (CC): N : NON-CONTINUOUS; L : LONG-CONTINUOUS; R: DEMANDABLE RECEPTACLES; K: KITCHEN

CKT NO.	VA LOAD A	VA LOAD B	VA LOAD C	LOAD DESCRIPTION	CC	TYPE CNT. M	TYPE CNT. R	TYPE CNT. L	C. B. TR	C. B. P	BUS A	BUS B	BUS C	C. B. TR	C. B. P	TYPE CNT. L	TYPE CNT. R	TYPE CNT. M	CC	LOAD DESCRIPTION	VA LOAD A	VA LOAD B	VA LOAD C	CKT NO.
1	1531			LOUNGE & OFFICES #109-112	L			23	20	1	X			20	1		1		N	COPIER MACHINE	1200			2
3		1408		RESTROOMS/STORAGE/CONF RM #132 *	L			26	20	1		X		20	1		1		N	COPIER MACHINE		1200		4
5			1279	EMERGENCY LIGHTS	L			18	20	1			X	20	1		1		N	COPIER MACHINE			1200	6
7	1356			EMERGENCY LIGHTS	L			20	20	1	X			20	1		1		N	COPIER MACHINE	1200			8
9		1704		OPEN OFFICE *	L			24	20	1		X		20	1	1			N	ELEVATOR MACHINE ROOM LIGHTS		120		10
11			1704	OPEN OFFICE *	L			24	20	1			X	20	1	6			L	ELEVATOR CAB LIGHTING			450	12
13	1199			CORRIDOES & LOBBY *	L			18	20	1	X			20	1			1	N	ELEVATOR CAB POWER	360			14
15		1274		CORRIDOES & LOBBY *	L			19	20	1		X		20	1		2		R	ELEVATOR MACHINE ROOM RECPT.		360		16
17			1704	OPEN OFFICE *	L			24	20	1			X	20	1	2			L	ELEVATOR PIT LIGHTS			200	18
19	1323			STORAGE AND CONF #123 & #124	L			14	20	1	X			20	1		1		R	ELEVATOR PIT RECEPTACLE	180			20
21		1635		CONFERENCE ROOM #125	L			26	20	1		X		20	1			1	N	ELEVATOR SUMP PUMP		450		22
23			1232	BEHIND PUBLIC COUNTER *	L			12	20	1			X	50	2			1	N	CAC-1			3245	24
25	1020			PUBLIC COUNTER *	L			17	20	1	X			--	--			--	N	----------	3245			26
27		1278		PUBLIC COUNTER WAITING *	L			18	20	1		X		40	2			1	N	RANGE/OVEN		3120		28
29			1364	SITE LIGHTING *	L			11	20	1			X	--	--			--	N	----------			3120	30
31	1308			SITE LIGHTING *	L			11	20	1	X			20	1			1	N	CP-1	300			32
33		1174		SITE LIGHTING *	L			10	20	1		X		30	2			1	N	WH-1		2250		34
35			300	FOUNTAIN PUMP *	N	1			20	1			X	--	--			--	N	----------			2250	36
37	96			TRASH LIGHT, IRR. CONTROLLER	L	1		1	20	1	X			20	1	8			L	ENTRY CANOPY LIGHTS *	1040			38
39		900		VAV BOXES	N	18			20	1		X		20	1					SPARE				40
41			100	DAMPERS	N	2			20	1			X	20	1			1	N	LIGHTING CONTROL PANEL "LCP"			100	42
	7833	9373	7683	PHASE TOTALS																PHASE TOTALS	7525	7500	10565	

Total Phase A: 15358
Total Phase B: 16873
Total Phase C: 18248

* - CONTROL VIA LIGHTING CONTROL PANEL "LCP".

CONNECTED VA (CODE N): 24660
CONNECTED VA (CODE L): 25279
CONNECTED VA (CODE R): 540
CONNECTED VA (CODE K):
TOTAL CONNECTED KVA: 50.5
DEMAND KVA:
TOTAL ADJUSTED KVA: 50.5
TOTAL PANEL AMPS: 152.1
AMPS W/LCL: 170.6

3/24/06 12:48 PM

PANEL: 1LC
LOCATION: IDF ROOM 133
MOUNTING: SURFACE
PANELVOLTAGE: 120/208 3P, 4W
BUS: 225A
MAIN: L.O.
AIC RATING: 42,000 SERIES RATED
CIRCUIT CODE (CC): N : NON-CONTINUOUS; L : LONG-CONTINUOUS; R: DEMANDABLE RECEPTACLES; K: KITCHEN

CKT NO.	VA LOAD A	VA LOAD B	VA LOAD C	LOAD DESCRIPTION	CC	TYPE CNT. M	TYPE CNT. R	TYPE CNT. L	C. B. TR	C. B. P	BUS A	BUS B	BUS C	C. B. TR	C. B. P	TYPE CNT. L	TYPE CNT. R	TYPE CNT. M	CC	LOAD DESCRIPTION	VA LOAD A	VA LOAD B	VA LOAD C	CKT NO.
1	180			IDF ROOM	R		1		20	1	X			20	1			1	N	FACP *	250			2
3		180		IDF ROOM	R		1		20	1		X		20	1					SPARE				4
5			180	IDF ROOM	R		1		20	1			X	20	1					SPARE				6
7	720			IDF ROOM	R		4		20	1	X			20	1					SPARE				8
9		1800		A/V EQUIPMENT ROOM #228	N		2		20	1		X		20	1					SPARE				10
11			1200	A/V EQUIPMENT ROOM #228	N		1		20	1			X	20	1					SPARE				12
13	600			A/V EQUIPMENT ROOM #228	N	1			20	1	X			20	1					SPARE				14
15		150		A/V EQUIPMENT ROOM #228	N	1			20	1		X		20	1					SPARE				16
17			150	A/V EQUIPMENT ROOM #211	N		1		20	1			X	20	1					SPARE				18
19	600			A/V EQUIPMENT ROOM #211	N		2		20	1	X			20	1					SPARE				20
21				SPARE					20	1		X		20	1		1		N	A/V EQUIPMENT ROOM #125		750		22
23				SPARE					20	1			X	20	1			1	N	A/V EQUIPMENT ROOM #124			900	24
25				SPARE					20	1	X			20	1			1	N	A/V EQUIPMENT ROOM #124	900			26
27				SPACE								X		20	1		1		N	A/V EQUIPMENT ROOM #132		300		28
29				SPACE									X	20	1		2		N	A/V EQUIPMENT ROOM #125			1800	30
31				SPACE							X			20	1		1		N	A/V EQUIPMENT ROOM #125	1200			32
33				SPACE								X		20	1		1		N	A/V EQUIPMENT ROOM #124		600		34
35				SPACE									X	20	1		1		N	A/V EQUIPMENT ROOM #124			300	36
37				SPACE							X			20	1			1	N	A/V EQUIPMENT ROOM #125	900			38
39				SPACE								X		20	1			1	N	A/V EQUIPMENT ROOM #125		150		40
41				SPACE									X	20	1									42
	2100	2130	1530	PHASE TOTALS																PHASE TOTALS	3250	1800	3000	

Total Phase A: 5350
Total Phase B: 3930
Total Phase C: 4530

PROVIDE ISOLATED GROUND BUSS.
* - PROVIDE LOCK-ON DEVICE.

CONNECTED VA (CODE N): 12550
CONNECTED VA (CODE L):
CONNECTED VA (CODE R): 1260
CONNECTED VA (CODE K):
TOTAL CONNECTED KVA: 13.9
DEMAND KVA:
TOTAL ADJUSTED KVA: 13.9
TOTAL PANEL AMPS: 44.6
AMPS W/LCL: 44.6

3/24/06 11:05 AM

PANEL: 1LD
LOCATION: ELECTRICAL ROOM 107
MOUNTING: SURFACE
PANELVOLTAGE: 120/208 3P, 4W
BUS: 100A
MAIN: L.O.
AIC RATING: 42,000 SERIES RATED
CIRCUIT CODE (CC): N : NON-CONTINUOUS; L : LONG-CONTINUOUS; R: DEMANDABLE RECEPTACLES; K: KITCHEN

CKT NO.	VA LOAD A	VA LOAD B	VA LOAD C	LOAD DESCRIPTION	CC	TYPE CNT. M	TYPE CNT. R	TYPE CNT. L	C. B. TR	C. B. P	BUS A	BUS B	BUS C	C. B. TR	C. B. P	TYPE CNT. L	TYPE CNT. R	TYPE CNT. M	CC	LOAD DESCRIPTION	VA LOAD A	VA LOAD B	VA LOAD C	CKT NO.
1	1500			SITE EQUIPMENT	N	1			20	1	X			20	1	7			L	WALKWAY BOLLARDS *	665			2
3		1500		SITE EQUIPMENT	N	1			20	1		X		20	1	6			L	WALKWAY BOLLARDS *		570		4
5			1500	SITE EQUIPMENT	N	1			20	1			X	20	1					SPARE				6
7	1500			COPY MACHINE	N	1			30	2	X			20	1		5		R	WIRE RACEWAY	900			8
9		1500		----------	N	--			--	--		X		20	1		5		R	WIRE RACEWAY		900		10
11			1500	COPY MACHINE	N	1			30	2			X	20	1		5		R	WIRE RACEWAY			900	12
13	1500			----------	N	--			--	--	X			20	1		5		R	WIRE RACEWAY	900			14
15				SPARE					20	1		X		20	1		5		R	WIRE RACEWAY		900		16
17				SPARE					20	1			X	20	1		5		R	WIRE RACEWAY			900	18
19				SPARE					20	1	X			20	1					SPARE				20
21				SPACE								X		20	1		4		R	RECEPTACLES #127,128,131,132		720		22
23				SPACE									X	20	1		4		R	RECEPTACLES #127,128,131,132			720	24
25				SPACE							X			20	1					SPARE				26
27				SPACE								X		20	1					SPARE				28
29				SPACE									X	20	1					SPARE				30
31				SPACE							X									SPACE				32
33				SPACE								X								SPACE				34
35				SPACE									X							SPACE				36
37				SPACE							X									SPACE				38
39				SPACE								X								SPACE				40
41				SPACE									X							SPACE				42
	4500	3000	3000	PHASE TOTALS																PHASE TOTALS	2465	3090	2520	

Total Phase A: 6965
Total Phase B: 6090
Total Phase C: 5520

* - CONTROL VIA LIGHTING CONTROL PANEL "LCP".

CONNECTED VA (CODE N): 10500
CONNECTED VA (CODE L): 1235
CONNECTED VA (CODE R): 6840
CONNECTED VA (CODE K):
TOTAL CONNECTED KVA: 18.6
DEMAND KVA:
TOTAL ADJUSTED KVA: 18.6
TOTAL PANEL AMPS: 58.1
AMPS W/LCL: 59.5

3/24/06 12:48 PM

APPROVED
MAY 01 2006
BUILDING & SAFETY
CITY OF FONTANA

APPROVED
REVIEWED BY ________ DATE
Approval of these plans shall not be construed to be a permit for, or an approval of any violation of any of the ... of the state or local ... plans must ... until completion.

LANGDON WILSON
ARCHITECTURE
PLANNING
INTERIORS

18800 VON KARMAN AVENUE, SUITE 200
IRVINE, CALIFORNIA 92612-1517
949 · 833 · 9193

GLP Engineering, Inc.
Mechanical and Electrical Engineers
1751 East Garry Avenue
Santa Ana, CA 92705-5814
Telephone (949) 428-8800
Fax (949) 428-8805
GLP # 123.002

CITY OF FONTANA
DEVELOPMENT SERVICES ORGANIZATION BUILDING
8353 SIERRA AVENUE FONTANA, CALIFORNIA

CITY OF FONTANA CALIFORNIA

REV.	DATE	ISSUED FOR	REV.	DATE	ISSUED FOR

Stamp
REGISTERED PROFESSIONAL ENGINEER
GARY L. PETRAK
EXP 6-30-06
ELECTRICAL
STATE OF CALIFORNIA

DATE 04-14-06
SCALE NONE
DRAWN BY: GLP
JOB NO. L454-000
CADD TITLE 123002_E401
SHEET TITLE
PANEL SCHEDULES
SHEET NUMBER:
E004

©Copyright 2005 Langdon Wilson

PERMIT SET / BID SET 04-17-06

A2a – DENOTES REFERENCES TO NOTES BELOW. LETTERS/NUMBERS REFER TO PARAGRAPHS BELOW.

A. ELEVATOR ELECTRICAL REQUIREMENTS

1. POWER FEEDER FOR ELEVATOR.

2. MACHINE/EQUIPMENT ROOM SPECIFIC REQUIREMENTS::

a. THE LIGHT SWITCH FOR THE ELEVATOR MACHINE ROOM SHALL BE LOCATED INSIDE THE ELEVATOR MACHINE ROOM AND CONVENIENT TO THE ELEVATOR MACHINE ROOM DOOR.

b. MINIMUM LIGHTING ILLUMINATION LEVELS IN THE ELEVATOR MACHINE ROOM SHALL BE 19 FOOTCANDLES. ASME A17.1 SECTION 2.7.5.1.

c. IF LIGHTING FIXTURE IS LESS THAN 8 FEET ABOVE FINSHED FLOOR, FIXTURE SHALL HAVE A LAMP GUARD.

d. PROVIDE DEDICATED 20 AMP, 120 VOLT CIRCUIT FOR ELEVATOR MACHINE ROOM LIGHTING.

e. PROVIDE FUSIBLE DISCONNECT SWITCH WITH FIRE SAFETY INTERFACE COMPONENTS INCLUDING, CLASS J FUSE BLOCK AND FUSES FOR SELECTIVE COORDINATION UTILIZING LOW-DETAIL FUSES, COVER INTERLOCK, HANDLE LOCK, CONTROL POWER INTERFACE RELAYS, AUXILIARY CONTACTS FOR BATTERY LOWERING, INTEGRAL CONTROL POWER-VOLTAGE AS REQUIRED, GROUND LUG AND UL LISTED. BUSSMAN POWER MODULE PS SERIES OR EQUIVALENT BY FERRAZ SHAWMUT. DISCONNECT AND CONTROLS SHALL HAVE ACCESS PER NEC620-72 AND SHALL BE LOCATED WITHIN 18 INCHES OF THE STRIKE JAMB OF THE ELEVATOR MACHINE ROOM DOOR. THE DISCONNECT SWITCH SHALL BE EXTERNALLY OPERABLE AND LOCKABLE IN THE "OPEN" POSITION. NEC 620-51(a),(c). NFPA 72-3-9.4. THE SHUNT TRIP SHALL NOT BE LOCATED IN THIS SWITCH OR IN THE ELEVATOR MACHINE ROOM. THE SHUNT TRIP SHALL BE LOCATED IN THE SWITCHBOARD OR DISTRIBUTION BOARD FEEDING THIS SWITCH OUTSIDE OF THE ELEVATOR MACHINE ROOM SO AS NOT NOT TO POTENTIALLY RESET POWER IN AN AREA OF STANDING WATER. ADDITIONALLY, THE SHUNT TRIP DEVICE IS NOT CONSIDERED PART OF THE ELEVATOR EQUIPMENT.

f. POWER FUSED DISCONNECT SWITCH TO HAVE GROUNDING PER NEC 620-82.

g. PROVIDE DEDICATED 20 AMP, 120 VOLT CIRCUIT FOR ELEVATOR MACHINE ROOM RECEPTACLE. PROVIDE DUPLEX GROUND FAULT CIRCUIT INTERRUPTER (GFCI) TYPE RECEPTACLE IN ELEVATOR MACHINE ROOM.

h. THERE SHALL BE NO CONDUIT OR WIRING IN OR PASSING THROUGH THE ELEVATOR MACHINE ROOM NOT ASSOCIATED WITH THE ELEVATOR SYSTEMS. NEC 620-37.

i. PROVIDE A DEDICATED 20 AMP, 120 VOLT CIRCUIT AND FUSED DISCONNECT SWITCH IN ELEVATOR MACHINE ROOM FOR CAB POWER. DISCONNECT SWITCH SHALL BE LOCKABLE IN THE "OPEN" POSITION. NEC 620-51.

j. PROVIDE A DEDICATED 20 AMP, 120 VOLT CIRCUIT AND FUSED DISCONNECT SWITCH IN THE ELEVATOR MACHINE ROOM FOR CAB LIGHTING. DISCONNECT SWITCH SHALL BE LOCKABLE IN THE "OPEN" POSITION. NEC 620-51.

k. PROVIDE A 3/4"C. FOR A DEDICATED TELEPHONE LINE FROM THE ELEVATOR CONTROLLER TO THE BUILDING TELEPHONE BACKBOARD OR TELEPHONE COMPANY POINT OF ENTRY.

m. PROVIDE A CEILING MOUNTED HEAT DETECTOR IN ELEVATOR MACHINE ROOM, WITHIN 2 FEET OF THE FIRE SPRINKLER HEAD. ONLY HEAT DETECTOR(S) IN ELEVATOR MACHINE ROOM ACTIVATE THE SHUNT TRIP CIRCUIT BREAKER. HEAT DETECTOR SHALL BE 135 DEGREE RATE OF RISE. ASME A17-1 SECTION 2.8.2.3.2.

n. PROVIDE CEILING MOUNTED SMOKE DETECTOR IN ELEVATOR MACHINE ROOM.

o. PROVIDE DRY CONTACT IN FUSED DISCONNECT SWITCH FOR BATTERY BACK-UP CONTROL CIRCUIT.

p. PROVIDE 3/4"C. WITH CONTROL CONDUCTORS FOR INTERFACE WITH ELEVATOR BATTERY LOWERING SYSTEM.

q. PROVIDE HEAVY DUTY 8-FOOT, 4-LAMP FLUORESCENT STRIP FIXTURE WITH DIE-FORMED STEEL HOUSING, BAKED WHITE ENAMEL FINISH AND 14-GAUGE WIREGUARD DAYBRITE #HDS SERIES OR EQUIVALENT.

3. ELEVATOR PIT SPECIFIC REQUIREMENTS:

a. PROVIDE DEDICATED 20 AMP, 120 VOLT CIRCUIT WITH GROUND FAULT CIRCUIT INTERRUPTER (GFCI) TYPE CIRCUIT BREAKER FOR ELEVATOR PIT LIGHTING.

b. PROVIDE HEAVY DUTY ENCLOSED AND GASKETED ROUGH SERVICE LUMINAIRE WITH MALLEABLE IRON WALL MOUNTING HOOD/ARM, THREADED HUBS, GLOBE ADAPTER, SHOCK ABSORBING PORCELAIN SOCKET, GLASS GLOBE, STEEL GLOBE GUARD, NEOPRENE GASKETING AND UL LISTED WET LOCATIONS. APPLETON #V-51 SERIES OR EQUIVALENT.

c. THE ELEVATOR PIT ILLUMINATION LEVEL SHALL NOT BE LESS THAN 10 FOOTCANDLES. ASME A17.1 SECTION 2.2.5.1.

d. ELEVATOR PIT LIGHT SWITCH SHALL BE ADJACENT TO PIT LADDER AND 18 INCHES ABOVE SILL OF ACCESS DOOR. ASME A17.1 SECTION 2.2.5.3.

e. PROVIDE DEDICATED 20 AMP, 120 VOLT CIRCUIT FOR PIT RECEPTACLE.

f. PROVIDE DUPLEX GROUND FAULT CIRCUIT INTERRUPTER TYPE (GFCI) RECEPTACLE.

g. PROVIDE DEDICATED 20 AMP, 120 VOLT CIRCUIT WITH GROUND FAULT CIRCUIT INTERRUPTER (GFCI) TYPE CIRCUIT BREAKER FOR SUMP PUMP. PROVIDE CONTROL WIRING AS REQUIRED FOR OPERATION.

h. PROVIDE HEAT DETECTOR IN ELEVATOR PIT TO RECALL THE ELEVATOR TO THE UPPER LANDING AND SEND A SIGNAL TO THE FIRE ALARM CONTROL PANEL. THIS DETECTOR SHALL NOT ACTIVATE THE SHUNT TRIP CIRCUIT BREAKER. HEAT DETECTOR SHALL BE 135 DEGREE RATE OF RISE AND SHALL BE MOUNTED WITHIN 24 INCHES OF SPRINKLER HEAD.

4. ELEVATOR RECALL:

a. VERIFY ELEVATOR RECALL REQUIREMENTS WITH THE ELEVATOR INSTALLER AND AUTHORITY HAVING JURISDICTION.

b. FIRE ALARM INITIATING DEVICE(S) SHALL BE PROVIDED AT EACH LOBBY AND IN EACH SPRINKLERED SHAFT/HOISTWAY AND IN THE ELEVATOR MACHINE ROOM. ONLY THESE DETECTORS SHALL RECALL THE ELEVATOR. ASME A17.1 SECTION 2.27.3.2.3. NFPA 72-6.15.3.3.

c. ELEVATOR SHALL NOT RECALL FROM GENERAL ALARM. ASME A17.1 SECTION 2.27.3.1.4.

d. THE ACTIVATION OF A SMOKE DETECTOR IN ANY ELEVATOR LOBBY, OTHER THAN AT THE DESIGNATED LEVEL, SHALL CAUSE ALL CARS THAT SERVE THAT LOBBY TO RETURN NONSTOP TO THE DESIGNATED LEVEL. THE ACTIVATION OF A SMOKE DETECTOR IN ANY ELEVATOR HOISTWAY, SHALL CAUSE ALL ELEVATORS HAVING ANY EQUIPMENT LOCATED IN THE HOISTWAY, AND ANY ASSOCIATED ELEVATORS OF A GROUP AUTOMATIC OPERATION, TO RETURN NONSTOP TO THE DESIGNATED LEVEL, EXCEPT THAT SMOKE DETECTORS IN HOISTWAYS INSTALLED AT OR BELOW THE LOWEST LANDING OF RECALL, WHEN ACTIVATED, SHALL CAUSE THE CAR TO BE SENT TO THE UPPER LEVEL OF RECALL. THE OPERATION SHALL CONFORM TO THE REQUIREMENTS OF RULE 211.3a.

e. WHEN THE SMOKE DETECTOR AT THE DESIGNATED LEVEL IS ACTIVATED, THAT OPERATION SHALL CONFORM TO THE REQUIREMENTS OF RULE 211.3a, EXCEPT THAT THE CARS SHALL RETURN TO AN ALTERNATE LEVEL APPROVED BY THE ENFORCING AUTHORITY, UNLESS THE DESIGNATED-LEVEL THREE-POSITION PHASE I SWITCH (RULE 211.3a) IS IN THE "ON" POSITION.

f. THE ACTIVATION OF A SMOKE DETECTOR IN ANY ELEVATOR MACHINE ROOM, EXCEPT A MACHINE ROOM AT THE DESIGNATED LEVEL, SHALL CAUSE ALL ELEVATORS HAVING ANY EQUIPMENT LOCATED IN THAT MACHINE ROOM, AND ANY ASSOCIATED ELEVATORS OF A GROUP AUTOMATIC OPERATION, TO RETURN NONSTOP TO THE DESIGNATED LEVEL. THE ACTIVATION OF A SMOKE DETECTOR IN ANY ELEVATOR MACHINE ROOM AT THE DESIGNATED LEVEL SHALL CAUSE ALL ELEVATORS HAVING ANY EQUIPMENT LOCATED IN THAT MACHINE ROOM, AND ANY ASSOCIATED ELEVATORS OF A GROUP AUTOMATIC OPERATION, TO RETURN NONSTOP TO THE ALTERNATE LEVEL, OR THE APPOINTED LEVEL WHEN APPROVED BY THE AUTHORITY HAVING JURISDICTION.

g. ELEVATORS SHALL ONLY REACT TO THE FIRST SMOKE DETECTOR ZONE WHICH IS ACTIVATED FOR THAT GROUP.

h. PHASE I OPERATION, WHEN INITIATED BY A SMOKE DETECTOR, SHALL BE MAINTAINED UNTIL CANCELED BY MOVING THAT PHASE I SWITCH TO THE "BYPASS" POSITION [SEE ALSO RULE 211.3a(10)]. SMOKE DETECTORS AND/OR SMOKE DETECTOR SYSTEMS SHALL NOT BE SELF-RESETTING.

i. PROVIDE 3/4"C. WITH ELEVATOR RECALL SYSTEM CONTROL CONDUCTORS TO ELEVATOR CONTROLLER (WHERE RECALL IS REQUIRED).

5. ELEVATOR SHAFT/HOISTWAY

a. PROVIDE SMOKE DETECTOR IN ELEVATOR HOISTWAY WHERE HOISTWAY IS SPRINKLERED. REFER TO ARCHITECTURAL DOCUMENTS FOR BUILDING SPRINKLER REQUIREMENTS. ASME 17.1 SECTION 211.3b.

b. SMOKE DETECTORS SHALL NOT BE INSTALLED IN UNSPRINKLERED ELEVATOR HOISTWAYS UNLESS THEY ARE INSTALLED TO ACTIVATE THE ELEVATOR HOISTWAY SMOKE RELIEF EQUIPMENT. NFPA 72-6.15.3.6.

c. THERE SHALL BE NO CONDUIT OR WIRING IN OR PASSING THROUGH THE ELEVATOR SHAFT/HOISTWAY. NEC 620-37.

d. PROVIDE HEAT DETECTOR IN ELEVATOR HOISTWAY WITHIN 24" OF THE SPRINKLER HEAD WHERE HOISTWAY IS SPRINKLERED. REFER TO ARCHITECTURAL DOCUMENTS FOR BUILDING SPRINKLER REQUIREMENTS.

e. HEAT DETECTORS SHALL NOT BE INSTALLED IN UNSPRINKLERED ELEVATOR HOISTWAYS.

6. ELEVATOR LOBBIES/LANDINGS

a. PROVIDE A CEILING MOUNTED SMOKE DETECTOR IN EACH ELEVATOR LOBBY OF EACH LANDING.

b. THE LOBBY SMOKE DETECTOR SHALL BE LOCATED ON THE CEILING WITHIN 21 FEET OF THE CENTERLINE OF EACH ELEVATOR DOOR WITHIN THE ELEVATOR BANK UNDER THE CONTROL OF THE DETECTOR. NFPA 72-6.15.3.5.

c. PROVIDE A HEAT DETECTOR MOUNTED IN THE CEILING SPACE ABOVE EACH SMOKE DETECTOR OF EACH ELEVATOR LOBBY OF EACH LANDING.

7. PROVIDE TELEPHONE LINE AND CONNECTION TO TELEPHONE IN CAB TO PROVIDE 2-WAY, 24 HOUR COMMUNICATION. ASME A17.1 SECTIONS 2.27.1.1.1 AND 2.27.1.1.2.

8. VERIFY EXACT REQUIREMENTS AND POINTS OF CONNECTION WITH ELEVATOR CONTRACTOR PRIOR TO ROUGH-IN.

9. CONTRACTOR SHALL INCLUDE IN THE BID, ALL ELECTRICALLY RELATED COORDINATION ITEMS AS REQUIRED BY THE ELEVATOR CONTRACTOR FOR INSPECTION AND FINAL SIGN-OFF BY THE INSPECTOR. INCLUDE INSPECTION COORDINATION AND ANY CHANGES AND/OR REQUIREMENTS BY THE INSPECTOR AT NO ADDITIONAL COST TO THE CONTRACT. PROVIDE ANY TEMPORARY WIRING AND/OR POWER AS MAY BE REQUIRED FOR INSPECTIONS.

10. THE BUILDING FIRE ALARM SYSTEM MUST BE ACTIVATED BY THE SMOKE DETECTORS IN THE ELEVATOR LOBBIES, ELEVATOR HOISTWAYS AND ELEVATOR EQUIPMENT ROOMS.

11. ELEVATOR SMOKE DETECTOR ACTIVATION MUST BE VISIBLY DISPLAYED ON THE BUILDING FIRE ALARM ANNUNCIATOR.

NOTE:
EXACT ROOM SIZES AND ORIENTATIONS MAY VARY BY PROJECT. REFER TO FLOOR PLANS FOR SIZES AND ORIENTATIONS.

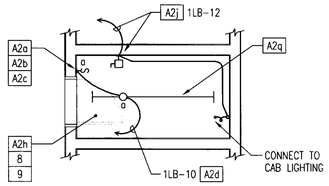

TYPICAL ELEVATOR MACHINE/EQUIPMENT ROOM LIGHTING PLAN

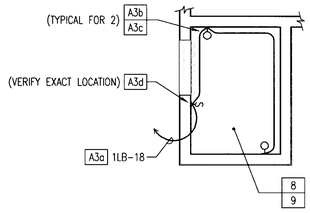

TYPICAL ELEVATOR PIT LIGHTING PLAN

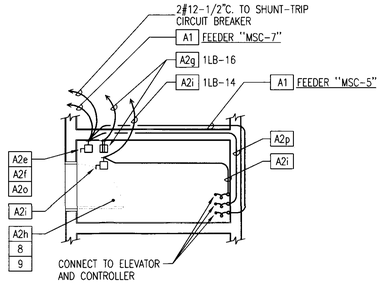

TYPICAL ELEVATOR MACHINE/EQUIPMENT ROOM POWER PLAN

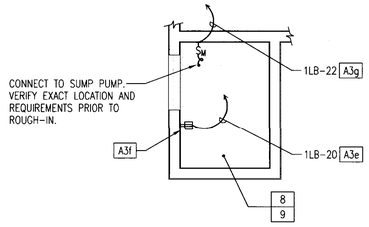

TYPICAL ELEVATOR PIT POWER PLAN

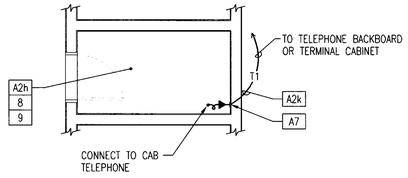

TYPICAL ELEVATOR MACHINE/EQUIPMENT ROOM SIGNAL PLAN

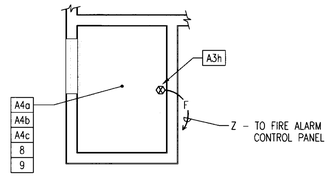

TYPICAL ELEVATOR PIT FIRE ALARM PLAN

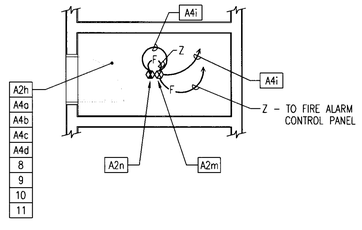

TYPICAL ELEVATOR MACHINE/EQUIPMENT ROOM FIRE ALARM PLAN

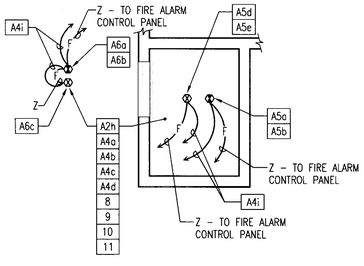

TYPICAL ELEVATOR SHAFT/HOISTWAY FIRE ALARM PLAN

APPROVED
MAY 01 2006
BUILDING & SAFETY
CITY OF FONTANA

APPROVED
REVIEWED BY _____ DATE

Approval of these plans shall not be construed to be a permit for, or an approval of any violation of any of the provisions of the state or local laws. One set of approved plans must be kept on the job until completion.

ELEVATOR PLANS AND NOTES

SCALE: 1/4"=1'-0"

1

LANGDON WILSON
ARCHITECTURE
PLANNING
INTERIORS

18800 VON KARMAN AVENUE, SUITE 200
IRVINE, CALIFORNIA 92612-1517
949 - 833 - 9193

GLP Engineering, Inc.
Mechanical and Electrical Engineers
1751 East Garry Avenue
Santa Ana, CA 92705-5814
Telephone (949) 428-8800
Fax (949) 428-8805
GLP # 123.002

CITY OF FONTANA
DEVELOPMENT SERVICES ORGANIZATION BUILDING
8353 SIERRA AVENUE FONTANA, CALIFORNIA

REV.	DATE	ISSUED FOR	REV.	DATE	ISSUED FOR

Stamp

DATE: 04-14-06 SCALE: AS NOTED
DRAWN BY: GLP
JOB NO. L454-000 CADD TITLE: 123002_E401

SHEET TITLE:
ELEVATOR PLANS AND NOTES

SHEET NUMBER:
E005

©Copyright 2005 Langdon Wilson

04-17-06

PERMIT SET / BID SET

P:\Clients\Langdon Wilson\Fontana City Hall 123.002\Drawings\123002_E005.dwg Apr 17, 2006 - 7:52am Kathy

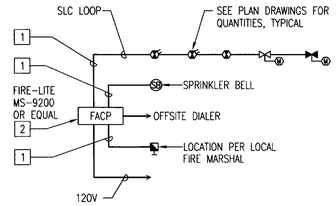

FIRE ALARM RISER NOTES:

1. WIRING PER MANUFACTURERS REQUIREMENTS.
2. THE CONTRACTOR SHALL FURNISH AND INSTALL A COMPLETE 24 VDC ANALOG/ADDRESSABLE/MULTIPLEX, MULTIPROCESSOR-BASED FIRE ALARM SYSTEM AS INDICATED ON THE DRAWINGS AND AS REQUIRED BY ALL NATIONAL, STATE AND LOCAL CODES. THE SYSTEM SHALL INCLUDE, BUT NOT BE LIMITED TO, ALL CONTROL EQUIPMENT, POWER SUPPLY, INITIATING DEVICES, AUDIBLE AND VISUAL NOTIFICATION APPLIANCES AS APPROPRIATE, CONDUIT, WIRING, FITTINGS, AND ALL OTHER ACCESSORIES NECESSARY TO PROVIDE A COMPLETE AND OPERABLE SYSTEM. FURNISH LABOR, EQUIPMENT, MATERIALS, AND PERFORMANCE OF OPERATIONS IN CONNECTION WITH INSTALLATION OF FIRE ALARM SYSTEM AS REQUIRED.
3. COMPLETE INSTALLATION SHALL CONFORM TO APPLICABLE SECTIONS OF NFPA-72 WITH CALIFORNIA STATE AMENDMENTS, CALIFORNIA FIRE CODE, CALIFORNIA BUILDING CODE AND CALIFORNIA ELECTRICAL CODE AND ALL LOCAL CODES AND REQUIREMENTS.

FIRE ALARM RISER DIAGRAM — SCALE 1/4"=1'-0" — 8

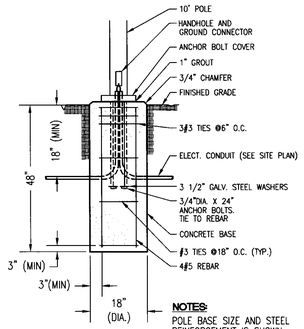

NOTES: POLE BASE SIZE AND STEEL REINFORCEMENT IS SHOWN FOR BIDDING PURPOSES ONLY DETAIL SHALL BE VERIFIED BY A STRUCTURAL ENGINEER PRIOR TO CONSTRUCTION.

POLE BASE DETAIL — SCALE NONE — 7

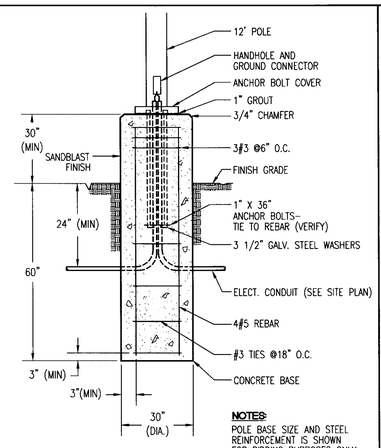

NOTES: POLE BASE SIZE AND STEEL REINFORCEMENT IS SHOWN FOR BIDDING PURPOSES ONLY DETAIL SHALL BE VERIFIED BY A STRUCTURAL ENGINEER PRIOR TO CONSTRUCTION.

POLE BASE DETAIL — SCALE NONE — 4

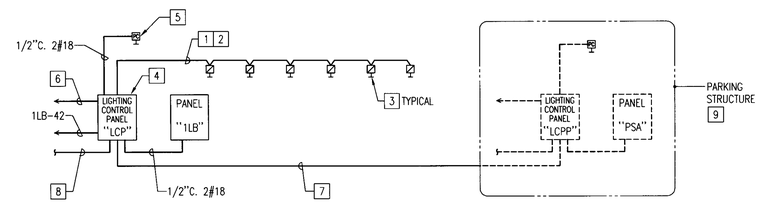

LIGHTING CONTROL PLAN NOTES:

1. 3/4"C. WITH (1) CAT5, 4 TWISTED PAIR CABLE.
2. DIGITAL BUS SHOULD BE RUN IN A MANNER TO FACILITATE TIE-IN OF SWITCHES SHOWN AS WELL AS FUTURE PROVISION. LABEL ALL J-BOXES "LIGHTING CONTROL DIGITAL BUS". SEE SHEET E007 FOR ADDITIONAL INFORMATION.
3. EXACT NUMBER AND TYPE OF SWITCHES PER ELECTRICAL PLAN, "LC & D CHELSEA SERIES". SEE SHEET E007 FOR ADDITIONAL INFORMATION.
4. A LC&D# GR2400 SERIES PROGRAMMABLE LIGHTING CONTROL PANEL, DTCMODEM-L2DMX WITH GR2400 TIMECLOCK AND LINK TO DMX CARD. SEE SHEET E007 FOR ADDITIONAL INFORMATION.
5. ROOF MOUNTED PHOTOCELL. LC&D #PCO.
6. OUT TO LIGHTING LOADS. SEE PLAN DRAWING.
7. 3/4"C. (1) WESTPENN #M56871, OR EQUAL, UNDERGROUND CAT 5 CABLE.
8. 3/4"C.O. TO RESPECTIVE TELEPHONE BACKBOARDS.
9. FOR ADDITIONAL INFORMATION SEE CIVIC CENTER PARKING STRUCTURE LIGHTING CONTROL DETAIL "C", SHEET E003.

LIGHTING CONTROL DIAGRAM — SCALE NONE — 1

DETAIL NOTES:

1. COORDINATE USE OF DUCT DETECTOR(S) OR AREA SMOKE DETECTOR(S) WITH MECHANICAL PLANS AND ARCHITECTURAL PLANS PRIOR TO INSTALLATION. COORDINATE WITH FIRE ALARM SUPPLIER. PROVIDE QUANTITY OF DETECTORS AS REQUIRED.

   HOMERUN VIA J-BOX. (SEE DETAIL FOR CONNECTION TO FIRE ALARM RELAY)
2. SMOKE/FIRE DAMPERS TO BE INSTALLED IN THE POWER OPEN STATE - SUPPLY POWER SHALL BE CONTROLLED BY FIRE ALARM RELAY OPERATED BY THE FIRE ALARM CONTROL PANEL. FIRE ALARM CONDITION OR LOSS OF POWER SHALL CAUSE ALL DAMPERS TO CLOSE. WHERE CORRIDORS ARE SEPARATED BY SMOKE DOORS, SEPARATE SMOKE DETECTION ZONES AND ADDITIONAL DAMPERS CIRCUITS SHALL BE PROVIDED.

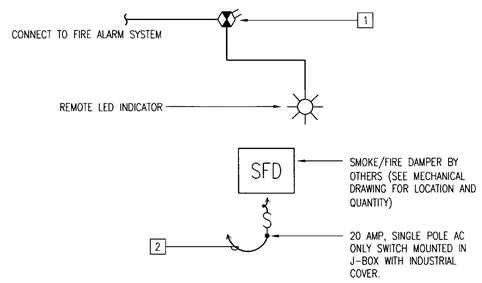

SMOKE/FIRE DAMPER WIRING DETAIL — SCALE NONE — 9

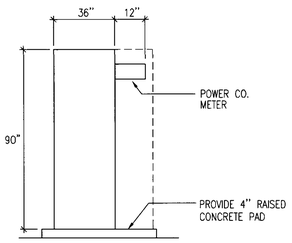

ELEVATION
SCALE: N.T.S.

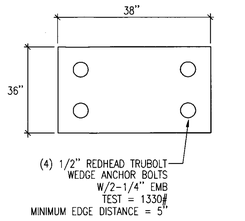

TYPICAL BASE DETAIL
SCALE: N.T.S.

SWITCHGEAR MOUNTING DETAIL — SCALE NONE — 5

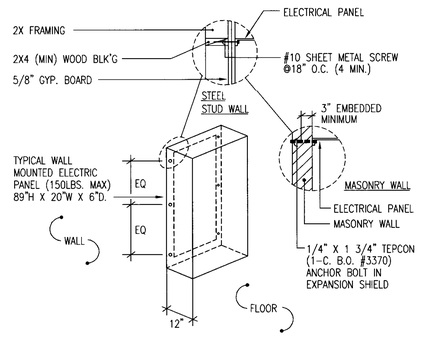

PANEL ANCHORAGE DETAIL — SCALE NONE — 2

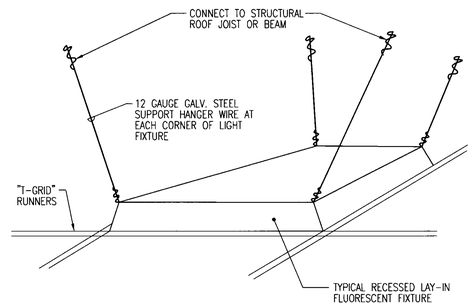

FLUORESCENT FIXTURE SUPPORT DETAIL — SCALE NONE — 6

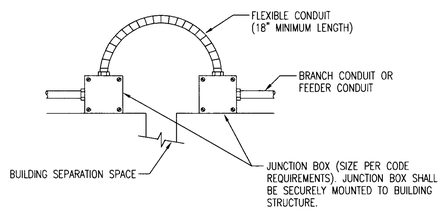

CONDUIT CROSSING BUILDING SEPARATION SPACE DETAIL — SCALE NONE — 3

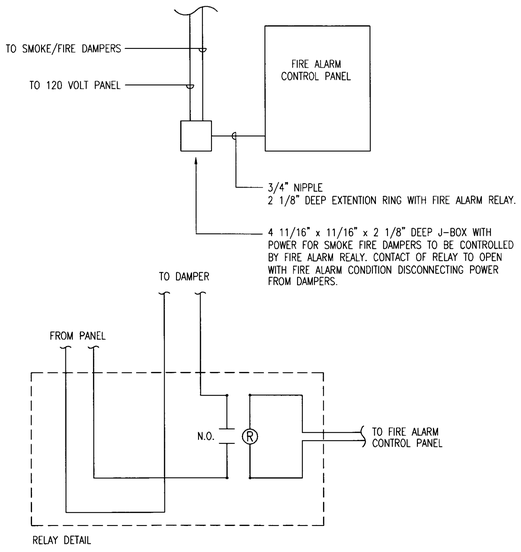

SMOKE/FIRE DAMPER CONN. TO FACP DETAIL — SCALE NONE — 10

APPROVED
MAY 01 2006
BUILDING & SAFETY
CITY OF FONTANA

Approval of these plans shall not be construed to be a permit for, or an approval of any violation of any of the provisions of the state or local laws. One set of approved plans must be kept on the job until completion.
WILLDAN

LANGDON WILSON
ARCHITECTURE
PLANNING
INTERIORS

18800 VON KARMAN AVENUE, SUITE 200
IRVINE, CALIFORNIA 92612-1517
949 · 833 · 9193

GLP Engineering, Inc.
Mechanical and Electrical Engineers
1751 East Garry Avenue
Santa Ana, CA 92705-5814
Telephone (949) 428-8800
Fax (949) 428-8805
GLP # 123.002

CITY OF FONTANA
DEVELOPMENT SERVICES ORGANIZATION BUILDING
8353 SIERRA AVENUE FONTANA, CALIFORNIA

REV.	DATE	ISSUED FOR	REV.	DATE	ISSUED FOR

Stamp

DATE: 04-14-06 SCALE: NONE
DRAWN BY: GLP
JOB NO. L454-000 CADD TITLE 123002_E401
SHEET TITLE: DETAILS
SHEET NUMBER: E006

©Copyright 2005 Langdon Wilson

PERMIT SET / BID SET 04-17-06

P:\Clients\Langdon Wilson\Fontana City Hall 123.002\Drawings\123002_E006.dwg Apr 17, 2006 - 7:52am Kathy

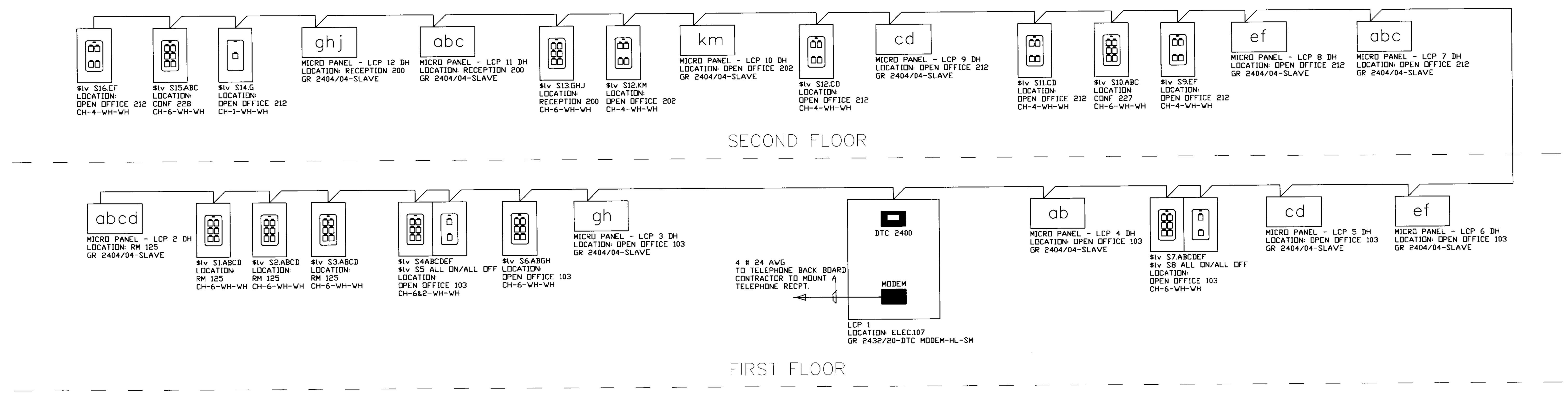

NOTES:
1. THE SINGLE LINE PRESENTED IN THIS DOCUMENT IS A REPRESENTATION OF THE COMPLETE BILL OF MATERIAL FOR THE PROJECT ENTITLED 'CITY OF FONTANA-DEVELPOMENT SERVICES'
2. THE ITEMS ON EACH BUS MAY BE PLACED IN ANY ORDER. THIS IS NOT A POINT TO POINT WIRING DIAGRAM AND IT SHOULD NOT BE TAKEN AS SUCH.
3. LIGHTING CONTROL & DESIGN WILL NOT BE HELD LIABLE FOR MISWIRING IF THE WIRING CONCEPT IS NOT UTILIZED.
4. LAYOUT BASED ON ELECTRICAL CONTRACTOR WIRING LC&D DEVICES USING CAT 5, 4 TWISTED PAIR CABLE WITH RJ45 END CONNECTORS. THE USE OF ANY OTHER CABLE OR END CONNECTORS WILL VOID WARRANTY.

GR 2404-iDH

WIRING DETAIL

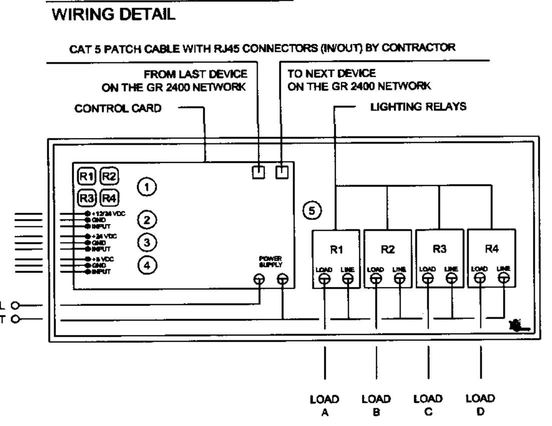

TYPICAL SINGLE LINE DRAWING

GR 2400 System

TYPICAL LINE VOLTAGE HOOK UP

GR 2400 PANEL TO BREAKER PANEL

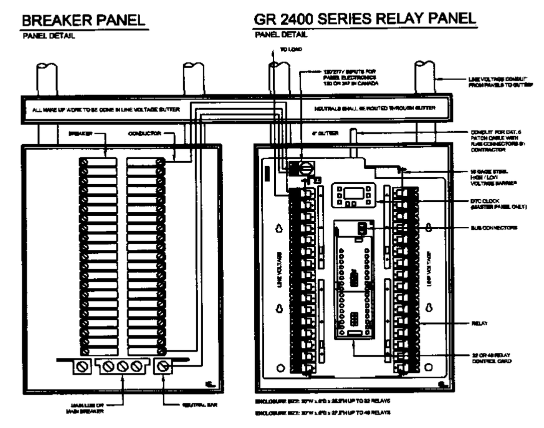

TYPICAL LOW VOLTAGE NETWORK HOOK UP

RJ45 CONNECTORS

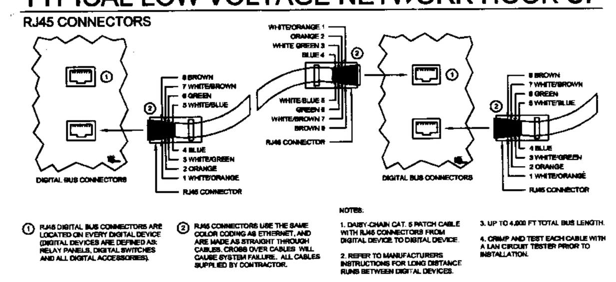

CHELSEA DIGITALSWITCH

Switch Detail

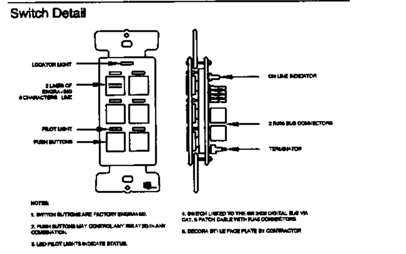

CITY OF FONTANA
DEVELOPMENT SERVICES ORGANIZATION BUILDING
SINGLE LINE DIAGRAM

SPECIFICATION

LIGHTING CONTROL SYSTEM

1. LIGHTING CONTROL SYSTEM SHALL BE DIGITAL AND CONSIST OF A MASTER LCP WITH UP TO 48 INDIVIDUAL RELAYS, SLAVE LCPS WITH UP TO 48 INDIVIDUAL RELAYS IN EACH PANEL, A MICRO LCP WITH UP TO 4 INDIVIDUAL RELAYS, WHICH CAN BE SWITCHABLE OR 0-10VDC DIMMABLE, DIGITAL SWITCHES AND DIGITAL INTERFACE CARDS. ALL SYSTEM COMPONENTS SHALL CONNECT IN A "DAISY CHAIN" STYLE CONFIGURATION AND BE CONTROLLED VIA CATEGORY 5 PATCH CABLE WITH RJ45 CONNECTORS, PROVIDING REAL-TIME TWO-WAY COMMUNICATION WITH EACH SYSTEM COMPONENT. ANALOG SYSTEMS ARE NOT ACCEPTABLE. IF INDICATED ON THE PLANS, LIGHTING CONTROL SYSTEM SHALL BE ABLE TO FULLY INTEGRATE SMARTBREAKER PANELBOARDS. ALL CABLES SUPPLIED BY CONTRACTOR.

2. RELAY PANELS SHALL BE PRE-WIRED, PRE-ASSEMBLED, PREPROGRAMMED AND LISTED TO UL 916 (NORMAL) OR ETL LISTED TO UL924 (EMERGENCY). PANELS SHALL BE PROVIDED WITH DUAL VOLTAGE POWER SUPPLY AND 16 GAGE BARRIERS TO SEPARATE HIGH AND LOW VOLTAGE, NORMAL AND EMERGENCY POWER.

3. STANDARD RELAYS SHALL HAVE NORMALLY CLOSED (NC) CONTACTS RATED FOR 120/277V 20A TUNGSTEN, BALLAST OR HID. STANDARD RELAYS SHALL BE ZERO-CROSS TYPE. NO EXCEPTIONS. OPTIONAL 600V, 2-POLE RELAY, NO OR NC, AND 347 SINGLE POLE RELAY SHALL BE AVAILABLE.

4. ALL INCANDESCENT LIGHTING CIRCUITS SHALL BE CONTROLLED BY A NC/SOFTSTART RELAY. NO EXCEPTIONS.

5. RELAY PANEL ELECTRONICS SHALL PROVIDE CURRENT VISUAL STATUS AND CONTROL OF EACH RELAY OR ZONE. ALL SYSTEM CONTROL ELECTRONICS SHALL STORE PROGRAMMING IN A NON-VOLATILE MEMORY AND PROVIDE 10 YEAR BATTERY BACK UP FOR TIME OF DAY.

6. LIGHTING CONTROL SYSTEM SHALL CONSIST OF MASTER AND SLAVE PANEL(S) CONTROLLED BY A 32-CHANNEL DIGITAL TIME CLOCK (DTC) THAT CONTROLS AND PROGRAMS THE ENTIRE LIGHTING CONTROL SYSTEM. THE DTC SHALL SUPPLY ALL TIME FUNCTIONS AND ACCEPT OTHER INPUTS. THE DTC SHALL ACCEPT CONTROL LOCALLY USING BUILT IN BUTTON PROMPTS AND USE OF AN 8 LINE 21-LETTER DISPLAY. FROM A COMPUTER, MODEM, ETHERNET OR INTERNET. ALL COMMANDS SHALL BE IN PLAIN ENGLISH. HELP PAGES SHALL DISPLAY ON THE DTC SCREEN.

7. ALL SWITCHES SHALL COMMUNICATE VIA RS 485, CAT 5 PATCH CABLE WITH RJ45 CONNECTORS. CONTACT CLOSURE STYLE SWITCHES ARE NOT ACCEPTABLE. ANY SWITCH BUTTON FUNCTION SHALL BE ABLE TO BE CHANGED LOCALLY (AT THE DTC OR A PC) OR REMOTELY, VIA MODEM, ETHERNET OR INTERNET. REFER TO SINGLE LINE DIAGRAM FOR WIRING DETAILS. SWITCHES WHICH CANNOT BE PROGRAMMED REMOTELY SHALL NOT BE ACCEPTABLE.

8. PHOTOCELL, EXTERIOR (PCO) OR INTERIOR (PCI), SHALL PROVIDE READOUT ON THE DTC SCREEN IN NUMBER VALUES ANALOGOUS TO FOOT-CANDLES. EACH PHOTOCELL SHALL PROVIDE A MINIMUM OF 14 TRIGGER POINTS. EACH TRIGGER CAN BE PROGRAMMED TO CONTROL ANY RELAY OR ZONE. EACH TRIGGER SHALL BE SET THROUGH DTC, LOCALLY OR REMOTELY. PHOTOCELLS THAT REQUIRE THE USE OF SET SCREWS OR MANUAL ADJUSTMENTS AT THE PHOTOCELL CONTROL CARD SHALL NOT BE ACCEPTABLE.

9. LIGHTING CONTROL SYSTEM INTERFACES TO INCLUDE A DRY CONTACT INPUT INTERFACE, BMS INTERFACE, DIMMING SYSTEM INTERFACE, ETHERNET/INTERNET INTERFACE AND AN INTERFACE TO SMARTBREAKER PANEL BOARDS. VERIFY AND INSTALL ONLY THOSE INTERFACES INDICATED ON THE PLANS.

10. STANDARD LIGHTING CONTROL SYSTEM SOFTWARE, PRE-INSTALLED INTO THE DTC, SHALL CONSIST OF AND USE STANDARD GRAPHICAL MANAGEMENT SOFTWARE (GMS) PAGES. GMS SOFTWARE SHALL PROVIDE VIA LOCAL OR REMOTE PC A VISUAL REPRESENTATION OF EACH DEVICE ON THE BUS. SHOW REAL TIME STATUS AND THE ABILITY TO CHANGE THE STATUS OF ANY INDIVIDUAL DEVICE, RELAY OR ZONE. OPTIONAL SOFTWARE THAT ACCEPTS JOB SPECIFIC GRAPHICS SHALL BE AVAILABLE. NO EXCEPTIONS.

11. START UP: EC SHALL CONTACT LC&D AT LEAST 7 DAYS BEFORE TURNOVER OF PROJECT. LC&D WILL REMOTELY DIAL INTO THE LIGHTING CONTROL SYSTEM, RUN DIAGNOSTICS AND CONFIRM SYSTEM PROGRAMMING. EC SHALL BE AVAILABLE AT THE TIME OF DIAL IN TO PERFORM ANY CORRECTIONS REQUIRED BY LC&D. EC IS RESPONSIBLE FOR COORDINATING WITH GC AND THE OWNER, THE INSTALLATION OF A DEDICATED TELEPHONE LINE OR A SHARED PHONE LINE WITH A/B SWITCH. PHONE JACK TO BE MOUNTED WITHIN 12" OF MASTER LCP. LABEL JACK WITH PHONE NUMBER. EC SHALL CONNECT PHONE LINE FROM JACK TO MASTER LCP. NO EXCEPTIONS.

12. TELEPHONE FACTORY DIAL-UP SUPPORT SHALL BE AVAILABLE AT NO ADDITIONAL COST TO THE EC OR OWNER BOTH DURING AND AFTER THE 3 YEAR WARRANTY PERIOD. FACTORY TO PREPROGRAM THE LIGHTING CONTROL SYSTEM PER PLANS AND APPROVED SUBMITTAL. THE LIGHTING CONTROL MANUFACTURER, AT NO ADDED COST, SHALL PROVIDE ADDITIONAL PROGRAMMING VIA MODEM AS REQUIRED BY THE EC OR OWNER FOR THE OPERATIONAL LIFE OF THE SYSTEM. MANUFACTURER WARRANTS THAT THE DTC SOFTWARE CAN BE UPGRADED AND MONITORED REMOTELY. NO EXCEPTIONS.

13. SHOP DRAWINGS: SUBMIT DIMENSIONED DRAWINGS OF LIGHTING CONTROL SYSTEM AND ACCESSORIES INCLUDING, BUT NOT NECESSARILY LIMITED TO, RELAY PANELS, SWITCHES, DTC, PHOTOCELLS AND OTHER INTERFACES. DRAWINGS SHALL INDICATE EXACT LOCATION AND PROGRAMMING OF EACH DEVICE. INDICATE ALL TIME SCHEDULES AND SWITCH BUTTON ENGRAVING.

14. LIGHTING CONTROL SYSTEM TO BE MANUFACTURED BY LIGHTING CONTROL & DESIGN, LOS ANGELES, CA (800) 345-4448.

Lighting Control & Design
(800) 345-4448 - http://www.lightingcontrols.com/

LANGDON WILSON
ARCHITECTURE
PLANNING
INTERIORS
18800 VON KARMAN AVENUE, SUITE 200
IRVINE, CALIFORNIA 92612-1517
949 - 833 - 9193

GLP Engineering, Inc.
Mechanical and Electrical Engineers
1751 East Garry Avenue
Santa Ana, CA 92705-5814
Telephone (949) 428-8800
Fax (949) 428-8805
GLP # 123.002

CITY OF FONTANA
DEVELOPMENT SERVICES
ORGANIZATION BUILDING
8353 SIERRA AVENUE FONTANA, CALIFORNIA

REV.	DATE	ISSUED FOR	REV.	DATE	ISSUED FOR

Stamp

REGISTERED PROFESSIONAL ENGINEER GARY L. PETRAK No. E 11252 EXP. 6-30-06 ELECTRICAL STATE OF CALIFORNIA

04-17-06

PERMIT SET / BID SET

DATE 04-14-06 SCALE NONE
DRAWN BY: GLP
JOB NO. L454-000 CADD TITLE 123002_E401

SHEET TITLE:
LIGHTING CONTROL RISER DIAGRAM

SHEET NUMBER:
E007

©Copyright 2005 Langdon Wilson

APPROVED
MAY 01 2006
BUILDING & SAFETY
CITY OF FONTANA

APPROVED
REVIEWED BY
Approved of these plans shall not be construed to be a permit for, or approval of any violation of the provisions of the ... laws. One set of approved plans shall be kept on the job until completion.
WILLDAN

P:\Clients\Langdon Wilson\Fontana City Hall 123.002\Drawings\123002_E007.dwg Apr 17, 2006 - 7:52am Kathy

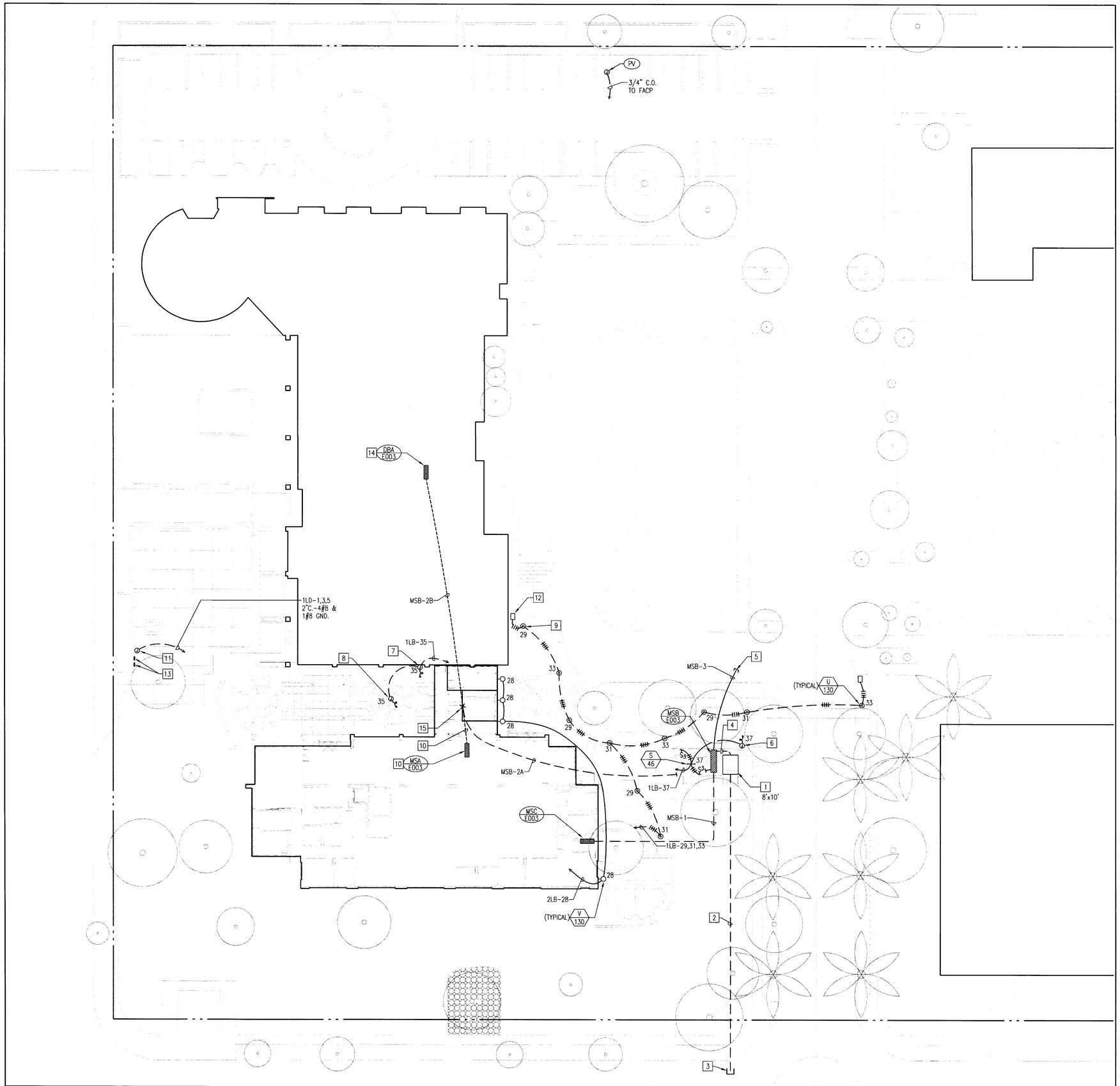

SITE PLAN

0 20' 40' 80'

N

SCALE 1"=20'-0"

SPECIAL NOTE

CONTRACTOR SHALL EXERCISE EXTREME CAUTION IN EXCAVATING AND TRENCHING ON THIS SITE TO AVOID EXISTING DUCTS, PIPING OR CONDUIT, ETC., AND TO PREVENT HAZARD TO PERSONNEL AND/OR TO EXISTING UNDERGROUND UTILITIES OR STRUCTURES. THE DESIGN PROFESSIONAL IS NOT RESPONSIBLE FOR THE LOCATION OF UNDERGROUND UTILITIES OR STRUCTURES, WHETHER OR NOT SHOWN ON AND INSTALLED BY THESE CONTRACT DOCUMENTS. THE CONTRACTOR SHALL IMMEDIATELY NOTIFY THE OWNER'S REPRESENTITIVE SHOULD SUCH UNIDENTIFIED CONDITIONS BE DISCOVERED. THESE DRAWINGS AND SPECIFICATIONS DO NOT INCLUDE THE NECESSARY COMPONENTS FOR CONSTRUCTION SAFETY. COORDINATE WITH CIVIL, MECHANICAL, PLUMBING AND EXISTING AS-BUILT DRAWINGS AND CONDITIONS.

GENERAL NOTE

CONTRACTOR SHALL VERIFY WITH ARCHITECT AND OWNER'S REPRESENTATIVE EXACT LOCATION OF ALL NEW UNDERGROUND STRUCTURES, INTENDED LOCATION OF NEW TRENCHES AND ALL NEW ABOVE GRADE EQUIPMENT PRIOR TO COMMENCEMENT OF ANY AND ALL CONSTRUCTION OR EXCAVATION.

REFERENCE NOTES:

1. UTILITY TRANSFORMER PAD PER UTILITY COMPANY REQUIREMENTS.
2. (1) 4"C.O. PRIMARY SERVICE FOR UTILITY COMPANY REQUIREMENTS.
3. TO UTILITY SERVICE POINT OF CONNECTION. VERIFY WITH SERVING UTILITY COMPANY.
4. (7) 5" C.O. SECONDARY SERVICE PER UTILITY COMPANY REQUIREMENTS.
5. STUB, CAP AND MARK FOR FUTURE PARKING STRUCTURE.
6. CONNECT TO IRRIGATION CONTROLLER AS REQUIRED. VERIFY EXACT LOCATION IN FIELD.
7. CONNECT TO FOUNTAIN PUMP AS REQUIRED. SEE LANDSCAPE PLANS FOR EXACT LOCATION.
8. CONNECT TO WATER LEVEL CONTROLLER AS REQUIRED. SEE LANDSCAPE PLANS FOR EXACT LOCATION.
9. MOUNT 3'-0" MINIMUM FROM CURB.
10. EXISTING EQUIPMENT TO BE REMOVED. VERIFY EXACT LOCATION IN FIELD.
11. RECONNECT TO EXISTING SITE EQUIPMENT. VERIFY IN FIELD.
12. PROVIDE 12"x18" CONCRETE PULLBOX WITH BOLT DOWN COVER ENGRAVED "ELECTRICAL". TERMINATE CONDUCTORS FOR FUTURE EXTENSION.
13. EXISTING ELECTRICAL TO REMAIN. RECONNECT AS REQUIRED.
14. EXISTING TO REMAIN. VERIFY EXACT LOCATION IN FIELD.
15. INTERCEPT EXISTING CONDUIT AND INSTALL NEW CONDUCTORS. VERIFY EXACT LOCATION IN FIELD.

SITE UTILITY NOTES

ELECTRIC SERVICES:

1. PROVIDE AND INSTALL TRANSFORMER PADS, COMPLETE, IN ACCORDANCE WITH SERVING UTILITY REQUIREMENTS.
2. CONTRACTOR TO PROVIDE AND INSTALL ONE 4" EMPTY C.O. FOR HIGH VOLTAGE FROM UTILITY CONNECTION POINT TO TRANSFORMER PAD. TERMINATE HIGH VOLTAGE CIRCUITS ACCORDING TO SERVING UTILITY REQUIREMENTS.
3. PROVIDE AND INSTALL CONDUITS AND CONDUCTORS AS REQUIRED FROM TRANSFORMER PADS TO BUILDING EQUIPMENT ROOMS.
4. PROVIDE PULL WIRE IN ALL EMPTY CONDUIT.
5. PROVIDE DOUBLE LOCK HASPS FOR EQUIPMENT DOORS. ONE FOR ELECTRIC COMPANY LOCK, ONE FOR OWNER.

SITE LIGHTING NOTES

1. SEE ARCHITECTURAL AND LANDSCAPE DRAWING FOR ALL FIXTURE LOCATIONS.
2. UNLESS OTHERWISE NOTED, SITE LIGHTING CONDUIT AND WIRE SHALL BE:
   - 3/4"C. WITH 2 #6 + 1 #10 CU GRD.,THWN (GREEN)
   - 1"C. WITH 3 #6 + 1 #10 CU GRD.,THWN (GREEN)
   - 1"C. WITH 4 #6 + 1 #10 CU GRD.,THWN (GREEN)
3. MOUNT PLANTER AREA POLETOP FIXTURE 3"-0" BEHIND FACE OF CURBS.
4. PROVIDE FIXTURE FLUSH FOOTING PER DETAIL UNLESS SHOWN BY "AG" SYMBOL. VERIFY FINAL ELEVATIONS WITH LANDSCAPE DRAWINGS BEFORE INSTALLATION OF FLUSH FOOTINGS.
5. PROVIDE ALL SITE LIGHTING POLES WITH HAND-HOLES AND GROUND STUDS.
6. THE ELECTRICAL CONTRACTOR SHALL VERIFY THE LOCATIONS OF ALL LIGHT FIXTURES, DEVICES, ETC, WITH THE LANDSCAPE ARCHITECT PRIOR TO ROUGH-IN, TYPICAL.

MISCELLANEOUS SITE NOTES

(PV) POST-INDICATOR-VALVE TAMPER SWITCH (BY OTHERS) WEATHER-PROOF (W/P) J-BOX. VERIFY LOCATION AND REQUIREMENTS FOR J-BOX, CONDUIT AND WIRE TO FIRE ALARM SYSTEM.

UTILITY CONTACTS

EDISON
7951 REDWOOD AVENUE
FONTANA, CA 92336
ATTN: CHRIS LORIMOR

PH: (909) 357-6221

APPROVED
MAY 01 2006
BUILDING & SAFETY
CITY OF FONTANA

REVIEWED BY _____ DATE

Approval of these plans shall not be construed to be a permit for, or an approval of any violation of any of the provisions of this state or local laws. One set of approved plans shall be kept on the job until completion.
WILLDAN

LANGDON WILSON
ARCHITECTURE
PLANNING
INTERIORS

18800 VON KARMAN AVENUE, SUITE 200
IRVINE, CALIFORNIA 92612-1517
949 · 833 · 9193

GLP Engineering, Inc.
Mechanical and Electrical Engineers

1751 East Garry Avenue
Santa Ana, CA 92705-5814

Telephone (949) 428-8800
Fax (949) 428-8805

GLP # 123.002

CITY OF FONTANA
DEVELOPMENT SERVICES
ORGANIZATION BUILDING

8353 SIERRA AVENUE FONTANA, CALIFORNIA

CITY OF FONTANA CALIFORNIA

REV.	DATE	ISSUED FOR	REV.	DATE	ISSUED FOR

Stamp

REGISTERED PROFESSIONAL ENGINEER
GARY L. PETER
No. 17777
Exp. 6-30-06
ELECTRICAL
STATE OF CALIFORNIA

DATE: 04-14-06 SCALE: 1"=20'-0"
DRAWN BY: GLP
JOB NO. L454-000 CADD TITLE 123002_E401

SHEET TITLE:
ELECTRICAL SITE PLAN

SHEET NUMBER:
E101

©Copyright 2005 Langdon Wilson

04-17-06

PERMIT SET / BID SET

P:\Clients\Langdon Wilson\Fontana City Hall 123.002\Drawings\123002_E101.dwg Apr 17, 2006 - 7:51am Kathy

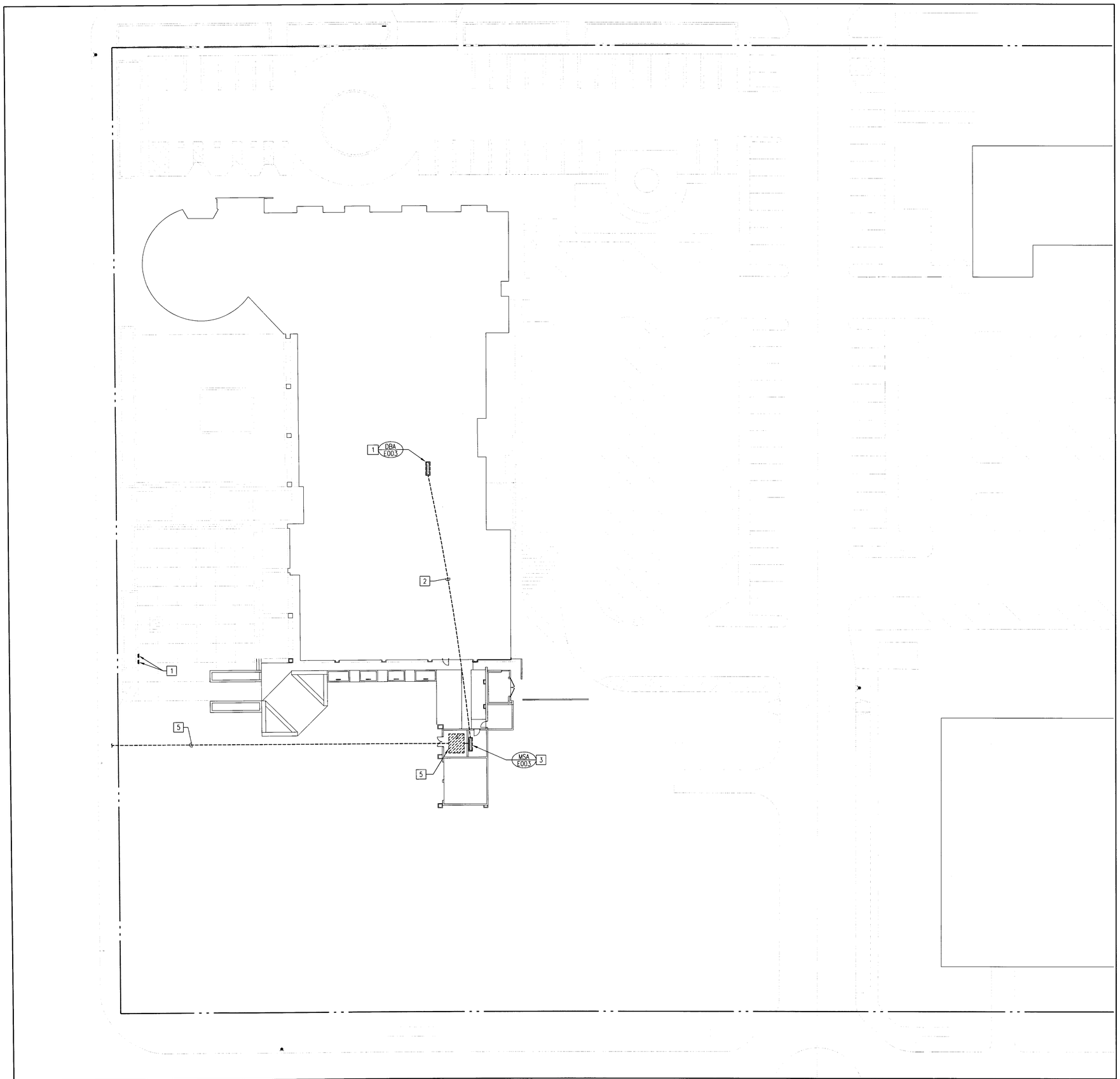

DEMOLITION SITE PLAN

0 20' 40' 60'

N

SCALE 1"=20'-0"

SPECIAL NOTE

CONTRACTOR SHALL EXERCISE EXTREME CAUTION IN EXCAVATING AND TRENCHING ON THIS SITE TO AVOID EXISTING DUCTS, PIPING OR CONDUIT, ETC., AND TO PREVENT HAZARD TO PERSONNEL AND/OR TO EXISTING UNDERGROUND UTILITIES OR STRUCTURES. THE DESIGN PROFESSIONAL IS NOT RESPONSIBLE FOR THE LOCATION OF UNDERGROUND UTILITIES OR STRUCTURES, WHETHER OR NOT SHOWN ON AND INSTALLED BY THESE CONTRACT DOCUMENTS. THE CONTRACTOR SHALL IMMEDIATELY NOTIFY THE OWNER'S REPRESENTITIVE SHOULD SUCH UNIDENTIFIED CONDITIONS BE DISCOVERED. THESE DRAWINGS AND SPECIFICATIONS DO NOT INCLUDE THE NECESSARY COMPONENTS FOR CONSTRUCTION SAFETY. COORDINATE WITH CIVIL, MECHANICAL, PLUMBING AND EXISTING AS-BUILT DRAWINGS AND CONDITIONS.

EXISTING CONDITIONS:

THE INFORMATION SHOWN IN THESE DOCUMENTS WAS OBTAINED PRIMARILY FROM "AS-BUILT" DOCUMENTS AND/OR LIMITED FIELD INVESTIGATION. THE ELECTRICAL CONTRACTOR SHALL VISIT THE PROJECT SITE PRIOR TO BID TO VERIFY EXISTING CONDITIONS AND SHALL INCLUDE IN THE BID PRICE ALL NECESSARY WORK REQUIRED TO COMPLETE THIS PROJECT. ANY DEMOLITION WORK SHOWN IN THESE DOCUMENTS IS FOR THE CONVENIENCE OF THE CONTRACTOR AND MAY NOT REFLECT ALL ITEMS WHICH REQUIRE DEMOLITION. ALL REQUIRED DEMOLITION AND RECONSTRUCTION WORK SHALL BE FIELD VERIFIED PRIOR TO BID AND ALL COSTS SHALL BE INCLUDED IN THE BID.

REFERENCE NOTES:

1. EXISTING EQUIPMENT TO REMAIN. VERIFY EXACT LOCATION IN FIELD.
2. EXISTING CONDUIT TO REMAIN, EXISTING CONDUCTORS TO BE REMOVED. REFER TO SINGLE LINE DIAGRAM FOR ADDITIONAL INFORMATION, SHEET E003. VERIFY EXACT LOCATION IN FIELD.
3. EXISTING EQUIPMENT TO BE REMOVED. VERIFY EXACT LOCATION IN FIELD.
4. EXISTING SERVING UTILITY COMPANY FEEDER TO BE REMOVED. VERIFY EXACT LOCATION IN FIELD. COORDINATE WITH SERVING UTILITY COMPANY.
5. EXISTING SERVING UTILITY COMPANY TRANSFORMERS TO BE REMOVED. VERIFY EXACT LOCATION IN FIELD. COORDINATE WITH SERVING UTILITY COMPANY.

LANGDON WILSON
ARCHITECTURE
PLANNING
INTERIORS

18800 VON KARMAN AVENUE, SUITE 200
IRVINE, CALIFORNIA 92612-1517
949 - 833 - 9193

GLP Engineering, Inc.
Mechanical and Electrical Engineers

1751 East Garry Avenue
Santa Ana, CA 92705-5814

Telephone (949) 428-8800
Fax (949) 428-8805

GLP # 123.002

CITY OF FONTANA
DEVELOPMENT SERVICES ORGANIZATION BUILDING

8353 SIERRA AVENUE FONTANA, CALIFORNIA

CITY OF FONTANA CALIFORNIA

REV.	DATE	ISSUED FOR	REV.	DATE	ISSUED FOR

Stamp

REGISTERED PROFESSIONAL ENGINEER
CARL L. PETRAK
EXP. 6-30-06
ELECTRICAL
STATE OF CALIFORNIA

APPROVED
MAY 01 2006
BUILDING & SAFETY
CITY OF FONTANA

APPROVED
REVIEWED BY
Approved of these plans [illegible] construed to be a permit [illegible] approval of any violation [illegible] the provisions of the [illegible] laws. One set of approved plans [illegible] be kept on the job until completion.
WILLDAN

DATE: 04-14-06 SCALE: 1"=20'-0"
DRAWN BY: GLP
JOB NO. L454-000 CADD TITLE 123002_E401

SHEET TITLE:
ELECTRICAL DEMOLITION SITE PLAN

SHEET NUMBER:
E102

©Copyright 2005 Langdon Wilson

PERMIT SET / BID SET 04-17-06

P:\Clients\Langdon Wilson\Fontana City Hall 123.002\Drawings\123002_E102.dwg Apr 17, 2006 - 7:51am Kathy

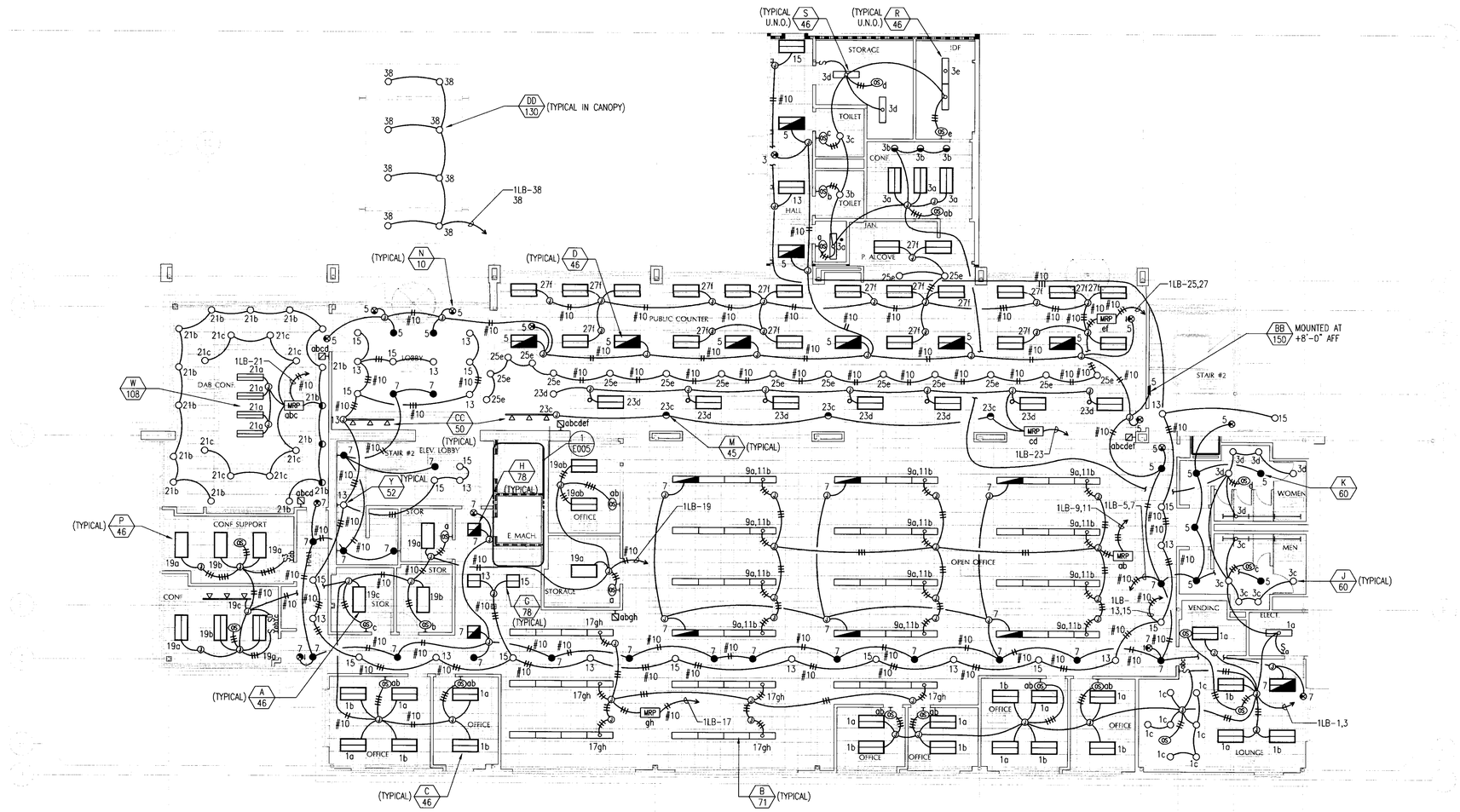

LANGDON WILSON
ARCHITECTURE
PLANNING
INTERIORS

18800 VON KARMAN AVENUE, SUITE 200
IRVINE, CALIFORNIA 92612-1517
949 - 833 - 9193

GLP Engineering, Inc.
Mechanical and Electrical Engineers
1751 East Garry Avenue
Santa Ana, CA 92705-5814
Telephone (949) 428-8800
Fax (949) 428-8805
GLP # 123.002

CITY OF FONTANA
DEVELOPMENT SERVICES ORGANIZATION BUILDING
8353 SIERRA AVENUE FONTANA, CALIFORNIA

REV.	DATE	ISSUED FOR	REV.	DATE	ISSUED FOR

Stamp

REGISTERED PROFESSIONAL ENGINEER
GARY L. RETRAK
Exp. 6-30-06
ELECTRICAL
STATE OF CALIFORNIA

APPROVED
MAY 0 1 2006
BUILDING & SAFETY
CITY OF FONTANA

REVIEWED BY

Approved of these plans shall not be construed to be a permit for or an approval of any violation of any of the provisions of the state or other laws. One set of approved plans must be kept on the job until completion.
WILLDAN

DATE: 04-14-06 SCALE: 1/8"=1'-0"
DRAWN BY: GLP
JOB NO. L454-000 CADD TITLE: 123002_E401

SHEET TITLE:
FIRST FLOOR LIGHTING PLAN

SHEET NUMBER:
E201

©Copyright 2005 Langdon Wilson

PERMIT SET / BID SET 04-17-06

P:\Clients\Langdon Wilson\Fontana City Hall 123.002\Drawings\123002_E201.dwg Apr 17, 2006 - 7:50am Kathy

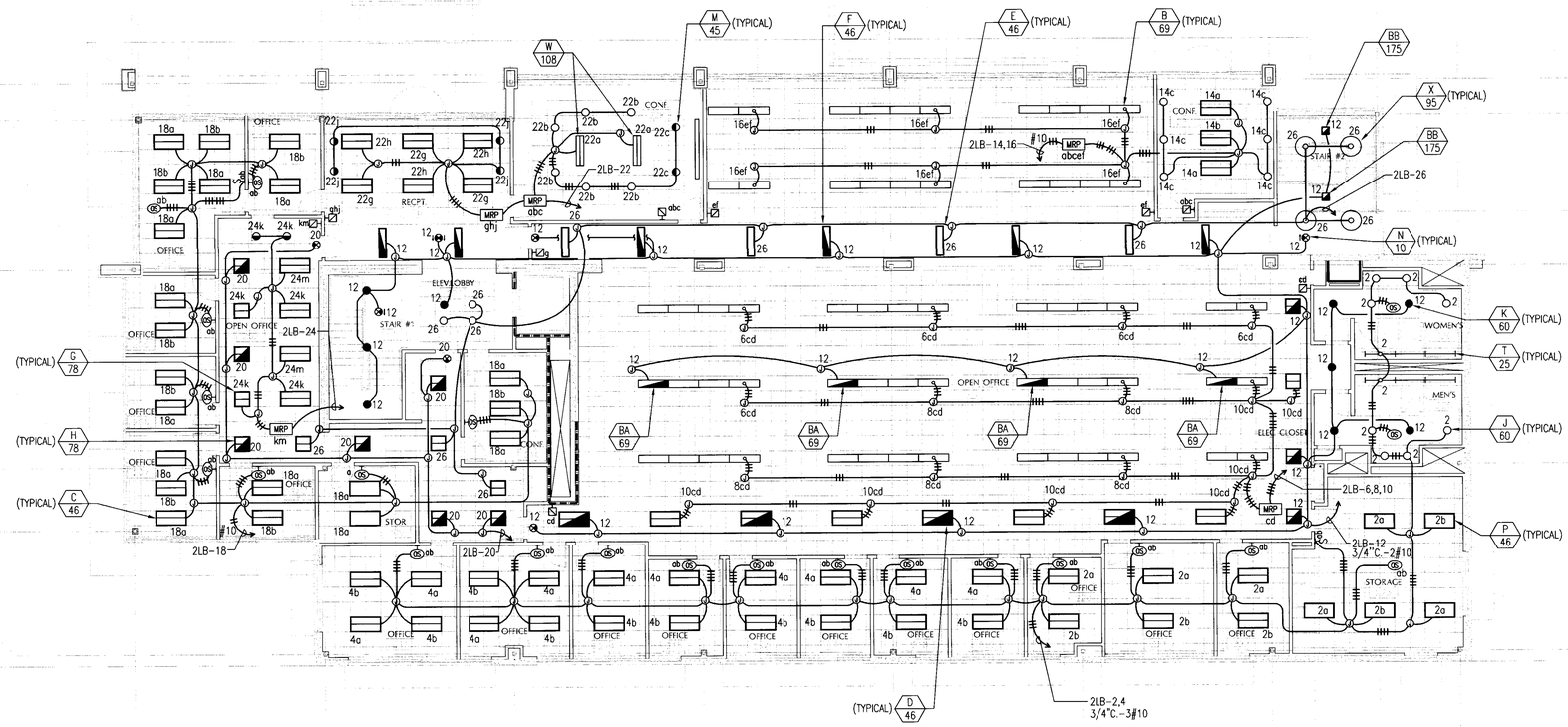

LANGDON WILSON
ARCHITECTURE
PLANNING
INTERIORS

18800 VON KARMAN AVENUE, SUITE 200
IRVINE, CALIFORNIA 92612-1517
949 - 833 - 9193

GLP Engineering, Inc.
Mechanical and Electrical Engineers

1751 East Garry Avenue
Santa Ana, CA 92705-5814

Telephone (949) 428-8800
Fax (949) 428-8805

GLP # 123.002

CITY OF FONTANA
DEVELOPMENT SERVICES ORGANIZATION BUILDING

8353 SIERRA AVENUE FONTANA, CALIFORNIA

CITY OF FONTANA CALIFORNIA

REV.	DATE	ISSUED FOR	REV.	DATE	ISSUED FOR

Stamp

REGISTERED PROFESSIONAL ENGINEER
MAY L. ETTRAN
No. E-12252
Exp. 6-30-06
ELECTRICAL
STATE OF CALIFORNIA

APPROVED
MAY 01 2006
BUILDING & SAFETY
CITY OF FONTANA

APPROVED
REVIEWED BY _____ DATE

Approved of these plans and specifications shall not be construed to be a permit for, or an approval of any violation of any provisions of the building laws. One set of approved plans shall be kept on the job at all times during the work.

DATE: 04-14-06 SCALE: 1/8"=1'-0"

DRAWN BY: GLP

JOB NO. L454-000 CADD TITLE 123002_E402

SHEET TITLE:

SECOND FLOOR LIGHTING PLAN

SHEET NUMBER:

E202

©Copyright 2005 Langdon Wilson

PERMIT SET / BID SET 04-17-06

P:\Clients\Langdon Wilson\Fontana City Hall 123.002\Drawings\123002_E202.dwg Apr 17, 2006 - 7:50am Kathy

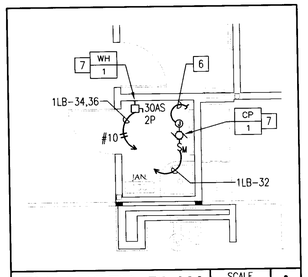

ENLARGED PLAN | SCALE 1/4"=1'-0" | A

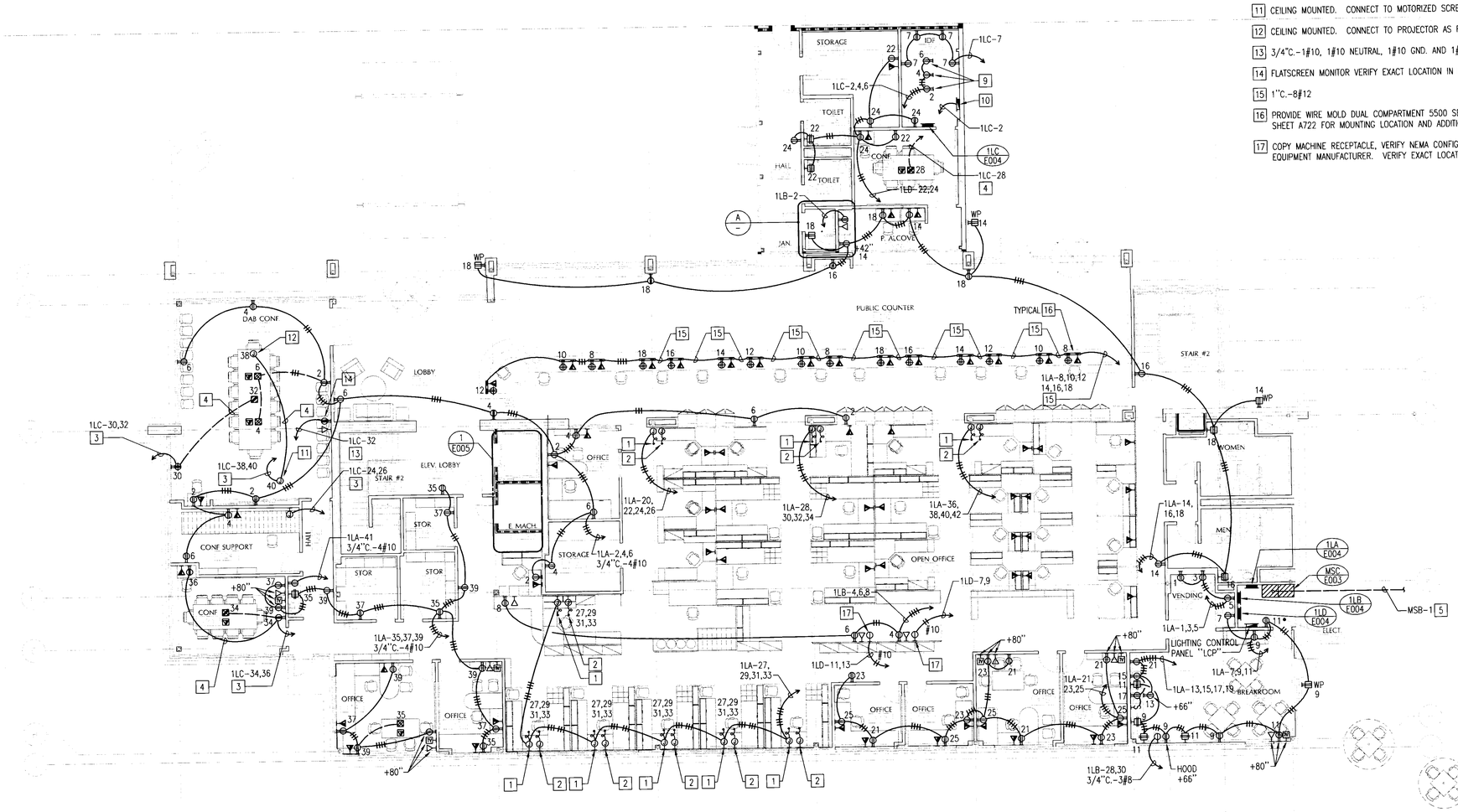

PLAN NOTES:

1. CONNECTION FOR POWER TO FURNITURE SYSTEM, VERIFY EXACT LOCATION WITH ARCHITECTURAL PLANS PRIOR TO ROUGH-IN.
2. CONNECTION FOR SIGNAL TO FURNITURE SYSTEM, VERIFY EXACT LOCATION WITH ARCHITECTURAL PLANS PRIOR TO ROUGH-IN.
3. 3/4"C.-2#10, 2#10 NEUTRALS, 1#10 GND. AND 1#10 IG.
4. 3/4"C.-1#10, 1#10 NEUTRAL, 1#10 GND. AND 1#10 IG.
5. ROUTE BELOW STRUCTURAL FOOTING. COORDINATE IN FIELD.
6. SEE PLUMBING DRAWINGS FOR CONTROLS AND OTHER WORK REQUIRED BUT NOT SHOWN HERE.
7. VERIFY EXACT LOCATION OF EQUIPMENT WITH PLUMBING DRAWINGS.
8. ALL FUSES FOR FUSIBLE DISCONNECTS TO BE SIZED PER EQUIPMENT NAMEPLATES, TYPE RK5-TD.
9. MOUNTED ON CABLE TRAY. SEE SHEET T301.
10. FIRE ALARM CONTROL PANEL.
11. CEILING MOUNTED. CONNECT TO MOTORIZED SCREEN AS REQUIRED.
12. CEILING MOUNTED. CONNECT TO PROJECTOR AS REQUIRED.
13. 3/4"C.-1#10, 1#10 NEUTRAL, 1#10 GND. AND 1#10 IG.
14. FLATSCREEN MONITOR VERIFY EXACT LOCATION IN FIELD.
15. 1"C.-8#12
16. PROVIDE WIRE MOLD DUAL COMPARTMENT 5500 SERIES RACE WAY. SEE SHEET A722 FOR MOUNTING LOCATION AND ADDITIONAL INFORMATION.
17. COPY MACHINE RECEPTACLE, VERIFY NEMA CONFIGURATION WITH EQUIPMENT MANUFACTURER. VERIFY EXACT LOCATION IN FIELD.

LANGDON WILSON
ARCHITECTURE
PLANNING
INTERIORS

18800 VON KARMAN AVENUE, SUITE 200
IRVINE, CALIFORNIA 92612-1517
949 - 833 - 9193

GLP Engineering, Inc.
Mechanical and Electrical Engineers
1751 East Garry Avenue
Santa Ana, CA 92705-5814
Telephone (949) 428-8800
Fax (949) 428-8805
GLP # 123.002

CITY OF FONTANA
DEVELOPMENT SERVICES
ORGANIZATION BUILDING
8353 SIERRA AVENUE FONTANA, CALIFORNIA

REV.	DATE	ISSUED FOR	REV.	DATE	ISSUED FOR

Stamp

REGISTERED PROFESSIONAL ENGINEER
GARY L. PETRAK
No. E-12252
Exp. 6-30-06
ELECTRICAL
STATE OF CALIFORNIA

APPROVED
MAY 11 2006
BUILDING & SAFETY
CITY OF FONTANA

APPROVED
REVIEWED BY _____ DATE

Approved of these plans shall not be construed to be a permit for or approval of any violation of any of the provisions of the laws or ordinances. One set of approved plans shall be kept on the job until completion of the work.

DATE: 04-14-06 SCALE: 1/8"=1'-0"
DRAWN BY: GLP
JOB NO. L454-000 CADD TITLE: 123002_E501

SHEET TITLE:
FIRST FLOOR POWER & SIGNAL PLAN

SHEET NUMBER:
E301

©Copyright 2005 Langdon Wilson

PERMIT SET / BID SET 04-17-06

P:\Clients\Langdon Wilson\Fontana City Hall 123.002\Drawings\123002_E301.dwg Apr 17, 2006 - 7:50am Kathy

PLAN NOTES:

1. POKE THRU FOR POWER CONNECTION TO FURNITURE SYSTEM, VERIFY EXACT LOCATION WITH ARCHITECTURAL PLANS PRIOR TO ROUGH-IN.
2. POKE THRU FOR SIGNAL CONNECTION TO FURNITURE SYSTEM, VERIFY EXACT LOCATION WITH ARCHITECTURAL PLANS PRIOR TO ROUGH-IN.
3. 3/4"C.-6#10
4. CEILING MOUNTED FOR PROJECTOR.
5. 3/4"C.-2#10, 2#10 NEUTRALS, 1#10 GND. AND 1#10 IG.
6. 3/4"C.-1#10, 1#10 NEUTRAL, 1#10 GND. AND 1#10 IG.
7. CEILING MOUNTED. CONNECT TO MOTORIZED SCREEN AS REQUIRED.
8. COPY MACHINE RECEPTACLE, VERIFY NEMA CONFIGURATION WITH EQUIPMENT MANUFACTURER. VERIFY EXACT LOCATION IN FIELD.
9. 3/4"C.-2#10. ROUTE THROUGH POKE THRU, VERIFY EXACT LOCATION WITH ARCHITECTURAL PLANS PRIOR TO ROUGH-IN.

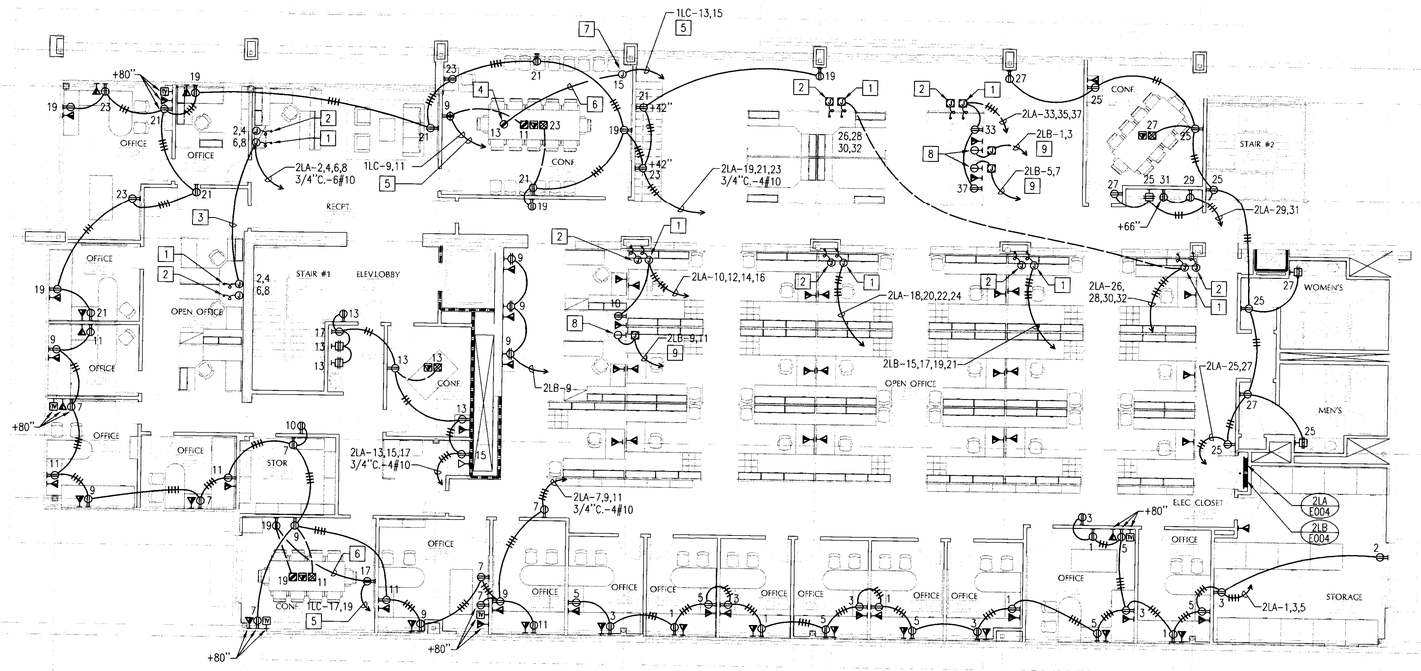

LANGDON WILSON
ARCHITECTURE
PLANNING
INTERIORS

18800 VON KARMAN AVENUE, SUITE 200
IRVINE, CALIFORNIA 92612-1517
949 - 833 - 9193

GLP Engineering, Inc.
Mechanical and Electrical Engineers

1751 East Garry Avenue
Santa Ana, CA 92705-5814
Telephone (949) 428-8800
Fax (949) 428-8805

GLP # 123.002

CITY OF FONTANA
DEVELOPMENT SERVICES
ORGANIZATION BUILDING
8353 SIERRA AVENUE FONTANA, CALIFORNIA

REV.	DATE	ISSUED FOR	REV.	DATE	ISSUED FOR

Stamp

REGISTERED PROFESSIONAL ENGINEER
GARY L. BETRAK
EXP. 6-30-06
ELECTRICAL
STATE OF CALIFORNIA

APPROVED
MAY 01 2006
BUILDING & SAFETY
CITY OF FONTANA

APPROVED
REVIEWED BY
DATE

Approved of these plans shall not be construed to be a permit for, or an approval of any violation of any of the provisions of the state or local laws. One set of approved plans must be kept on the job until completion.
WILLIAM

DATE: 04-14-06 SCALE: 1/8"=1'-0"
DRAWN BY: GLP
JOB NO. L454-000 CADD TITLE: 123002_E502

SHEET TITLE:
SECOND FLOOR POWER & SIGNAL PLAN

SHEET NUMBER:
E302

©Copyright 2005 Langdon Wilson

PERMIT SET / BID SET 04-17-06

P:\Clients\Langdon Wilson\Fontana City Hall 123.002\Drawings\123002_E302.dwg Apr 17, 2006 - 7:50am Kathy

PLAN NOTES:

1. CONNECTION TO VAV BOX AS REQUIRED. VERIFY EXACT LOCATIONIN FIELD.
2. VERIFY EXACT LOCATIONIN FIELD.
3. ALL FUSES FOR FUSIBLE DISCONNECTS TO BE SIZED PER EQUIPMENT NAMEPLATES, TYPE RK5-TD.
4. SEE MECHANICAL DRAWINGS FOR CONTROLS AND OTHER WORK REQUIRED BUT NOT SHOWN HERE.
5. VERIFY EXACT LOCATION OF EQUIPMENT WITH MECHANICAL DRAWINGS.

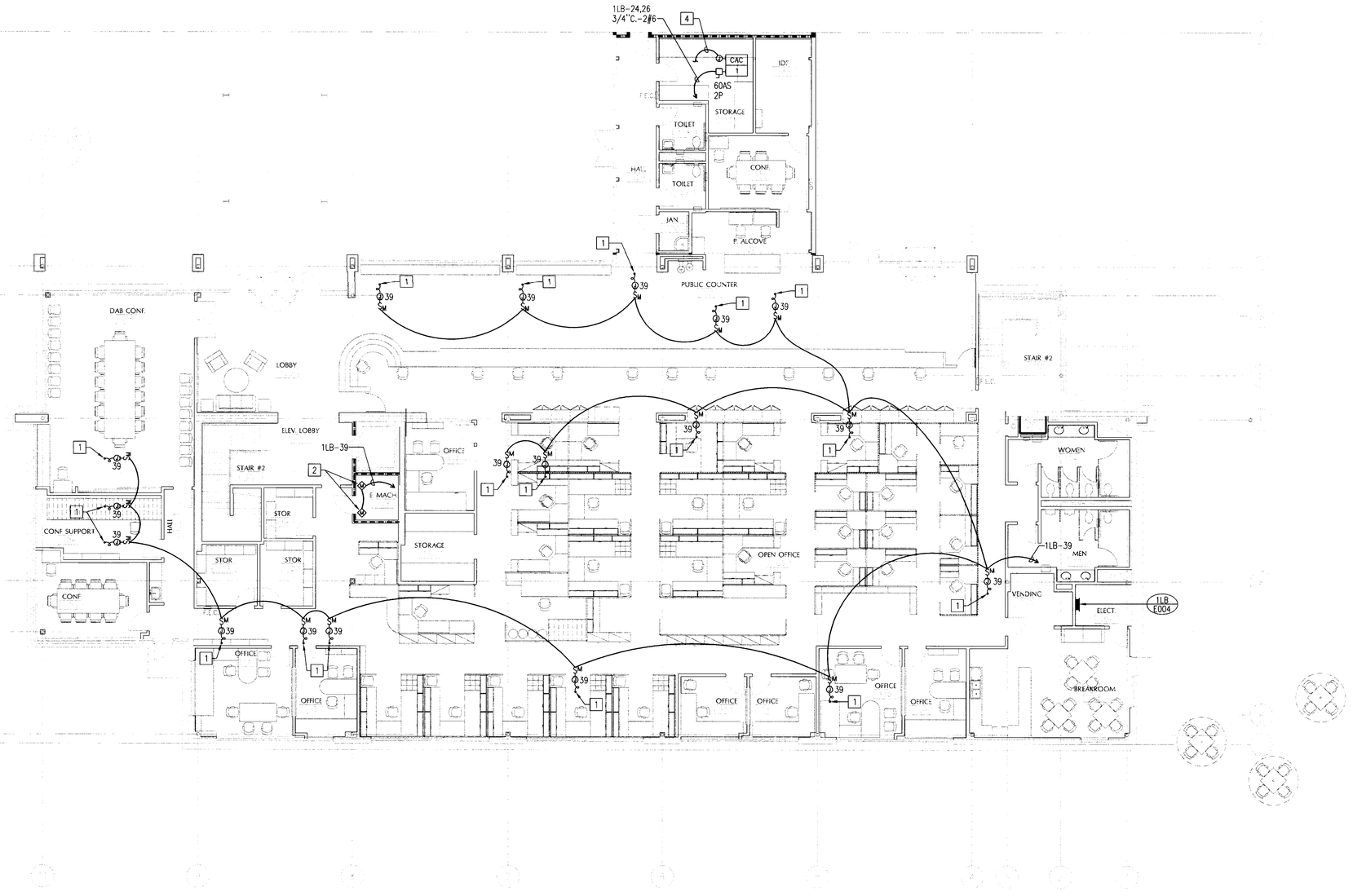

LANGDON WILSON
ARCHITECTURE
PLANNING
INTERIORS

18800 VON KARMAN AVENUE, SUITE 200
IRVINE, CALIFORNIA 92612-1517
949 - 833 - 9193

GLP Engineering, Inc.
Mechanical and Electrical Engineers
1751 East Garry Avenue
Santa Ana, CA 92705-5814
Telephone (949) 428-8800
Fax (949) 428-8805
GLP # 123.002

CITY OF FONTANA
DEVELOPMENT SERVICES ORGANIZATION BUILDING
8353 SIERRA AVENUE FONTANA, CALIFORNIA

CITY OF FONTANA CALIFORNIA

REV.	DATE	ISSUED FOR	REV.	DATE	ISSUED FOR

Stamp

REGISTERED PROFESSIONAL ENGINEER
MATT L. STRAKE
04-14-06
ELECTRICAL
STATE OF CALIFORNIA

APPROVED
MAY 01 2006
BUILDING & SAFETY
CITY OF FONTANA

APPROVED
REVIEWED BY _____ DATE

Approved of these plans shall not be construed to be a permit for, or an approval of any violation of any of the provisions of [illegible] state or local laws. Construction must comply with [illegible] be kept on the [illegible] and inspection. WILSON

DATE: 04-14-06 SCALE: 1/8"=1'-0"
DRAWN BY: GLP
JOB NO. L454-000 CADD TITLE 123002_E501

SHEET TITLE:
FIRST FLOOR HVAC ELECTRICAL PLAN

SHEET NUMBER:
E401

©Copyright 2005 Langdon Wilson

PERMIT SET / BID SET 04-17-06

P:\Clients\Langdon Wilson\Fontana City Hall 123.002\Drawings\123002_E401.dwg Apr 17, 2006 - 7:49am Kathy

PLAN NOTES:

1. CONNECTION TO VAV BOX AS REQUIRED. VERIFY EXACT LOCATIONIN FIELD.

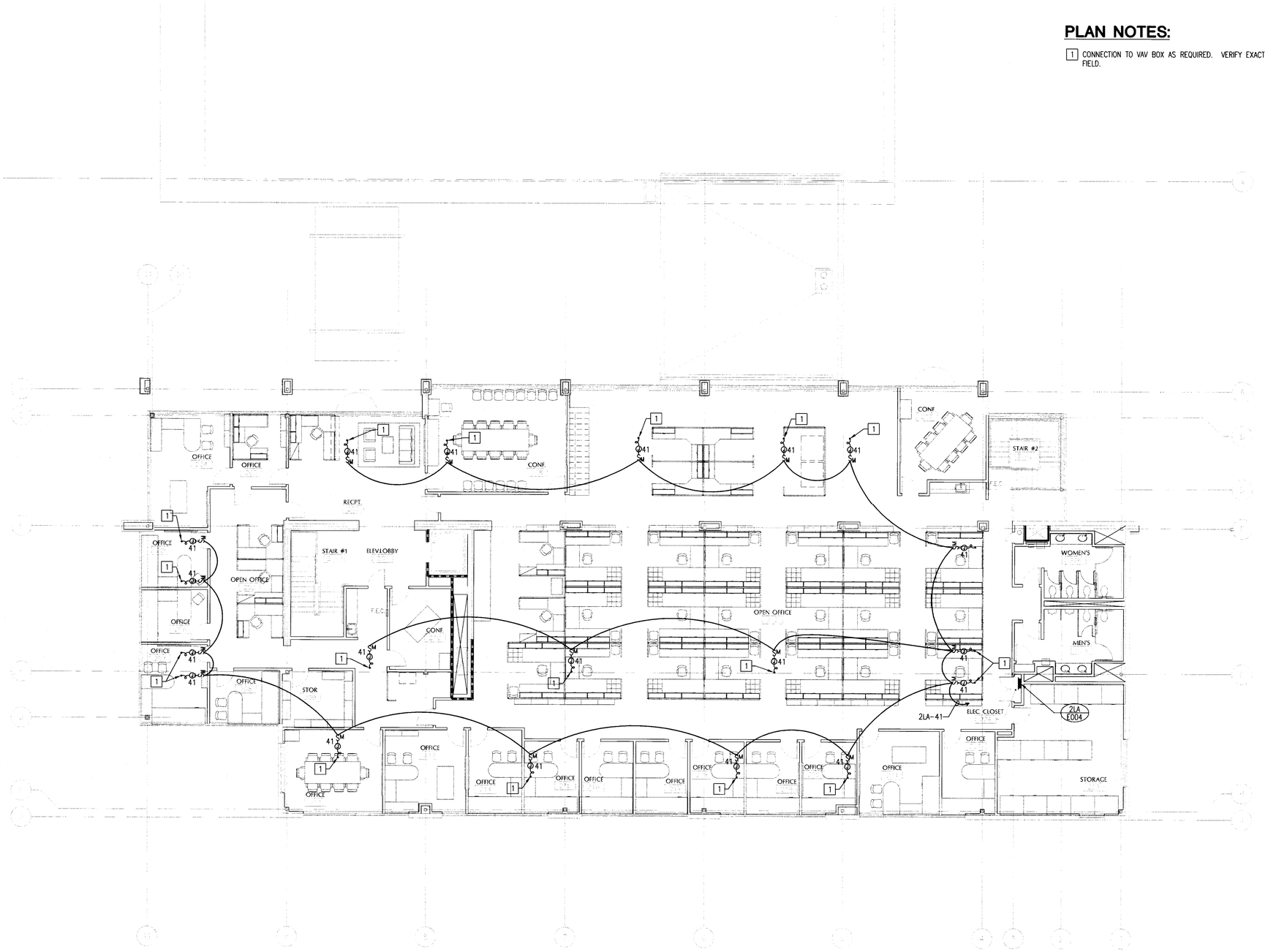

LANGDON WILSON
ARCHITECTURE
PLANNING
INTERIORS

18800 VON KARMAN AVENUE, SUITE 200
IRVINE, CALIFORNIA 92612-1517
949 - 833 - 9193

GLP Engineering, Inc.
Mechanical and Electrical Engineers
1751 East Garry Avenue
Santa Ana, CA 92705-5814
Telephone (949) 428-8800
Fax (949) 428-8805
GLP # 123.002

CITY OF FONTANA
DEVELOPMENT SERVICES
ORGANIZATION BUILDING
8353 SIERRA AVENUE FONTANA, CALIFORNIA

REV.	DATE	ISSUED FOR	REV.	DATE	ISSUED FOR

Stamp

REGISTERED PROFESSIONAL ENGINEER
GARY L. PETRAK
Exp. 6-30-06
ELECTRICAL
STATE OF CALIFORNIA

APPROVED
MAY 01 2006
BUILDING & SAFETY
CITY OF FONTANA

APPROVED
REVIEWED BY _____ DATE

Approved of these plans shall not be construed to be a permit for, or an approval of any violation of any of the provisions of the state or local laws. One set of [illegible] plans must be kept on the job until completion.
WILLDAN

DATE: 04-14-06 SCALE: 1/8"=1'-0"
DRAWN BY: GLP
JOB NO. L454-000 CADD TITLE: 123002_E502

SHEET TITLE:
SECOND FLOOR HVAC ELECTRICAL PLAN

SHEET NUMBER:
E402

©Copyright 2005 Langdon Wilson

PERMIT SET / BID SET 04-17-06

P:\Clients\Langdon Wilson\Fontana City Hall 123.002\Drawings\123002_E402.dwg Apr 17, 2006 - 7:49am Kathy

PLAN NOTES:

1. ALL EQUIPMENT INDICATED ON ROOF IS WEATHERPROOF.
2. ALL FUSES FOR FUSIBLE DISCONNECTS TO BE SIZED PER EQUIPMENT NAMEPLATES, TYPE RK5-TD.
3. SEE MECHANICAL DRAWINGS FOR CONTROLS AND OTHER WORK REQUIRED BUT NOT SHOWN HERE.
4. ROUTE ALL CONDUITS TO ROOF-TOP UNITS WITHIN ROOF-TOP UNITS AND HORIZONTALLY THROUGH ATTIC SPACE.
5. VERIFY EXACT LOCATION OF EQUIPMENT WITH MECHANICAL DRAWINGS.

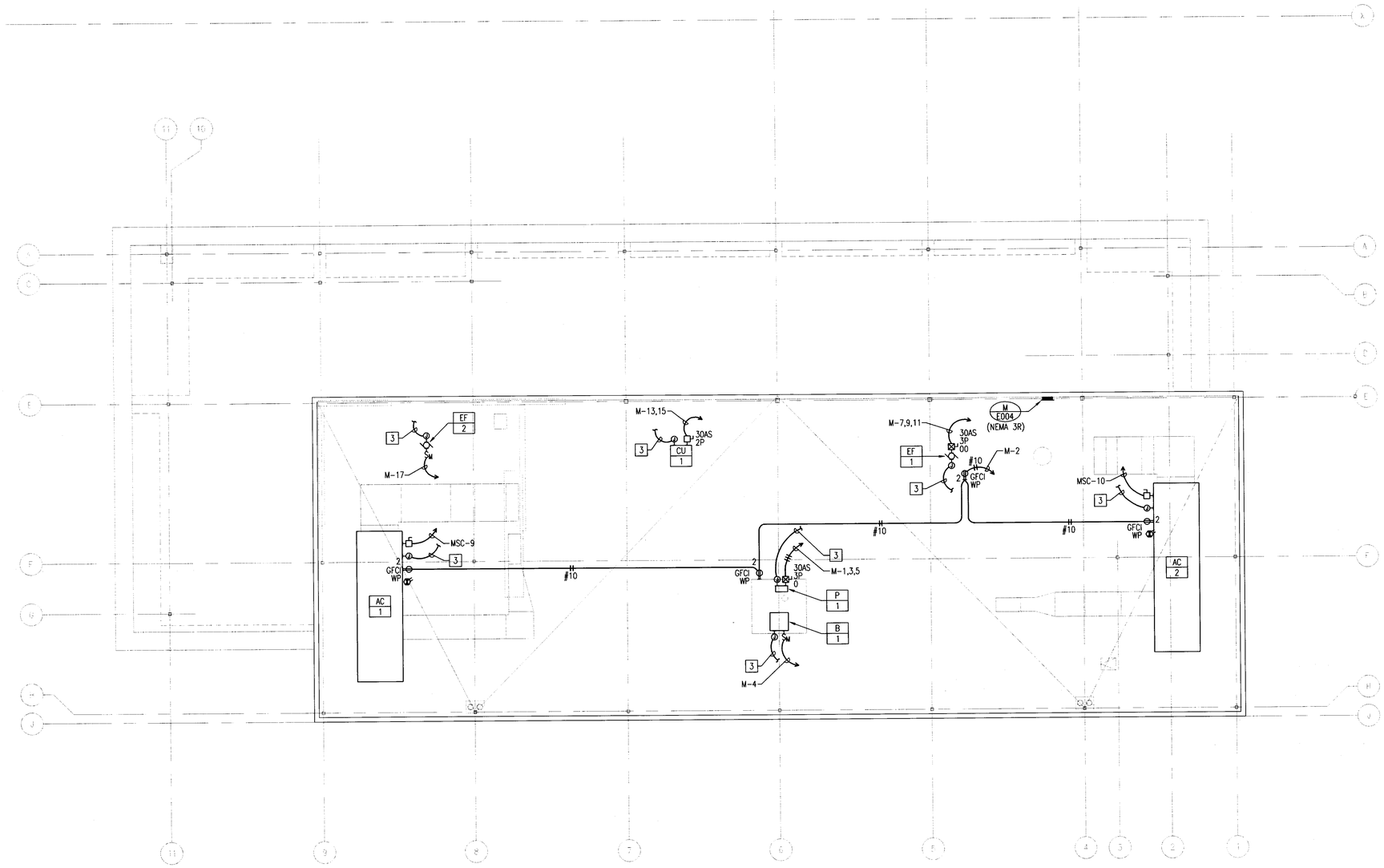

LANGDON WILSON
ARCHITECTURE
PLANNING
INTERIORS

18800 VON KARMAN AVENUE, SUITE 200
IRVINE, CALIFORNIA 92612-1517
949 - 833 - 9193

GLP Engineering, Inc.
Mechanical and Electrical Engineers
1751 East Garry Avenue
Santa Ana, CA 92705-5814
Telephone (949) 428-8800
Fax (949) 428-8805
GLP # 123.002

CITY OF FONTANA
DEVELOPMENT SERVICES
ORGANIZATION BUILDING
8353 SIERRA AVENUE FONTANA, CALIFORNIA

REV.	DATE	ISSUED FOR	REV.	DATE	ISSUED FOR

Stamp

REGISTERED PROFESSIONAL ENGINEER GARY L. KETRAK EXP. 6-30-06 ELECTRICAL STATE OF CALIFORNIA

APPROVED
MAY 01 2006
BUILDING & SAFETY
CITY OF FONTANA

APPROVED
REVIEWED BY _____ DATE

Approved of these plans shall not be construed to be a permit for, or an approval of any violation of any of the provisions of the state or local laws. One set of approved plans must be kept on the job until completion.
WILLDAN

DATE 04-14-06 SCALE 1/8"=1'-0"
DRAWN BY: GLP
JOB NO. L454-000 CADD TITLE 123002_E601

SHEET TITLE
ROOF HVAC
ELECTRICAL PLAN

SHEET NUMBER:
E403

©Copyright 2005 Langdon Wilson

PERMIT SET / BID SET 04-17-06

P:\Clients\Langdon Wilson\Fontana City Hall 123.002\Drawings\123002_E403.dwg Apr 17, 2006 - 7:49am Kathy

INTERIOR LIGHTING POWER ALLOWANCE — LTG-5-C

PROJECT NAME: City of Fontana — DATE: 2/3/2006

ALLOWED LIGHTING POWER (Choose One Method)

COMPLETE BUILDING METHOD - CONDITIONED SPACES

BUILDING CATEGORY (From Section 146 Table 146-B)	WATTS PER SF	COMPLETE BLDG. AREA	ALLOWED WATTS
Comp Bldg Office	1.10	26,251	28,876

AREA CATEGORY METHOD - CONDITIONED SPACES

AREA CATEGORY (From Section 146 Table 146-C)	WATTS PER SF	AREA (SF)	ALLOWED WATTS

PAGE TOTAL — BUILDING TOTAL — AREA — WATTS

TAILORED METHOD - CONDITIONED SPACES

TOTAL ALLOWED WATTS (From LTG-5-C or from computer run.)

UNCONDITIONED SPACES

Complete Building and Area Catagory Methods Category (From Section 146 Table 146-B&C)	WATTS PER SF	AREA (SF)	ALLOWED WATTS

PAGE TOTAL — BUILDING TOTAL — AREA — WATTS

TAILORED METHOD - UNCONDITIONED SPACES

TOTAL UNCONDITIONED SPACES ALLOWED WATTS (From LTG-5-C and LTG-6-C)

INTERIOR LIGHTING SCHEDULE (Part 2 of 2) — LTG-2-C

PROJECT NAME: City of Fontana — DATE: 2/3/2006

INSTALLED LIGHTING POWER FOR UNCONDITIONED SPACES

Name	Luminaire Type Description	C Lamp Type	D Number of Lamps per Luminaire	E Watts per Lamp	F Number of Ballast per Luminaire	G Watts per Luminaire	H CEC Default? Yes	No	I Number of Luminaires	J Installed Watts (G x I)

PAGE TOTAL: 0
BUILDING TOTAL (sum of all pages): 0
CONTROL CREDIT (From LTG-4-C): 0
ADJUSTED ACTUAL WATTS: 0

CERTIFICATE OF COMPLIANCE (Part 3 of 4) — LTG-1-C

PROJECT NAME: City of Fontana — DATE: 2/3/2006

CONTROLS FOR CREDIT IN CONDITIONED AND UNCONDITIONED SPACES

CONTROL LOCATION (Room # or Dwg. #)	CONTROL IDENTIFICATION	CONTROL TYPE (Occupant, Daylight, Dimming, etc.)	LUMINAIRES CONTROLLED TYPE	# OF LUMINAIRES	NOTE TO FIELD
LG CONFERENCE		Occ Sensor - <= 250 sqft	M	3	
LG CONFERENCE		Occ Sensor - <= 250 sqft	J	20	
SM CONFERENCE		Occ Sensor - <= 250 sqft	M	3	
SM CONFERENCE		Occ Sensor - <= 250 sqft	C	6	
SM CONFERENCE		Occ Sensor - <= 250 sqft	P	3	
RESTROOMS		Occ Sensor - <= 250 sqft	T	6	
RESTROOMS		Occ Sensor - <= 250 sqft	J	10	
RESTROOMS		Occ Sensor - <= 250 sqft	K	5	
SUPPORT STAIR		Occ Sensor - <= 250 sqft	D	2	
SUPPORT STAIR		Occ Sensor - <= 250 sqft	C	2	
ELEC-MECH		Occ Sensor - Storage	R	2	
STORAGE		Occ Sensor - Storage	R	4	
STORAGE		Occ Sensor - Storage	P	3	
SM OFFICES		Occ Sensor - Storage	R	1	
SM OFFICES		Occ Sensor - <= 250 sqft	C	18	

NOTES TO FIELD - For Building Department Use Only

LIGHTING CONTROLS CREDIT WORKSHEET (Part 1 of 2) — LTG-4-C

CONTROL CREDITS FOR CONDITIONED SPACES

PROJECT NAME: City of Fontana — DATE: 2/3/2006

A ROOM # ZONE ID CONDITIONED AREAS	B LIGHTING CONTROL DESCRIPTION	C PLAN REF.	D ROOM AREA (SF)	E WINDOW WALL RATIO	F DAYLIGHTING GLAZING VLT	G SKYLIGHT EFFECTIVE APERTURE	H WATTS OF CONTROL LIGHTING	I LIGHTING ADJUST. FACTOR	J CONTROL CREDIT WATTS (H X I)
LG CONFERENCE	Occ Sensor - <= 250 sqft	M	785				135	0.20	27
LG CONFERENCE	Occ Sensor - <= 250 sqft	J	785				1,200	0.20	240
SM CONFERENCE	Occ Sensor - <= 250 sqft	M	679				135	0.20	27
SM CONFERENCE	Occ Sensor - <= 250 sqft	C	679				276	0.20	55
SM CONFERENCE	Occ Sensor - <= 250 sqft	P	679				138	0.20	28
RESTROOMS	Occ Sensor - <= 250 sqft	T	669				150	0.20	30
RESTROOMS	Occ Sensor - <= 250 sqft	J	669				600	0.20	120
RESTROOMS	Occ Sensor - <= 250 sqft	K	669				300	0.20	60
SUPPORT STAIR	Occ Sensor - <= 250 sqft	D	515				92	0.20	18
SUPPORT STAIR	Occ Sensor - <= 250 sqft	C	515				92	0.20	18
ELEC-MECH	Occ Sensor - Storage	R	105				92	0.15	14
STORAGE	Occ Sensor - Storage	R	617				184	0.15	28
STORAGE	Occ Sensor - Storage	P	617				138	0.15	21
SM OFFICES	Occ Sensor - Storage	R	1,339				46	0.15	7
SM OFFICES	Occ Sensor - <= 250 sqft	C	1,339				828	0.20	166

1) From Equation 146-A
2) From Table 146-A

PAGE TOTAL: 858
BUILDING TOTAL: 858
Enter in LTG-2-C: Lighting Control Credit

INTERIOR LIGHTING SCHEDULE (Part 1 of 2) — LTG-2-C

PROJECT NAME: City of Fontana — DATE: 2/3/2006

INSTALLED LIGHTING POWER FOR CONDITIONED SPACES

Name	Luminaire Type Description	C Lamp Type	D Number of Lamps per Luminaire	E Watts per Lamp	F Number of Ballast per Luminaire	G Watts per Luminaire	H CEC Default? Yes	No	I Number of Luminaires	J Installed Watts (G x I)
B	(3) 4 ft Fluorescent T8 Elec (Ecologic lamps)	F32T8	3	32	1.0	69.0	X		72	4,968
C	(2) 4 ft Fluorescent T8 Elec (Ecologic lamps)	F32T8	2	32	1.0	46.0	X		57	2,622
D	(2) 4 ft Fluorescent T8 Elec (Ecologic lamps)	F32T8	2	32	1.0	46.0	X		9	414
	Designed Allowance: 12743 sqft at 0.200 w/sf									2,549
G	(2) 40w Compact Fluorescent	CF40	2	40	1.0	78.0	X		2	156
H	(2) 40w Compact Fluorescent	CF40	2	40	1.0	78.0	X		2	156
J	(2) 26w Fluorescent Triple Tube	Triple Tube	2	26	1.0	60.0	X		65	3,900
K	(2) 26w Fluorescent Triple Tube	Triple Tube	2	26	1.0	60.0	X		24	1,440
M	(2) 18w Compact Fluorescent Quad 4 Pin Elec	CFQ18W/G24q-2	2	18	1.0	45.0	X		12	540
P	(2) 4 ft Fluorescent T8 Elec (Ecologic lamps)	F32T8	2	32	1.0	46.0	X		6	276
R	(2) 4 ft Fluorescent T8 Elec (Ecologic lamps)	F32T8	2	32	1.0	46.0	X		7	322
T	(1) 4 ft Fluorescent T8 Elec (Ecologic lamps)	F32T8	1	32	1.0	25.0	X		6	150
W	(2) 54w Linear Fluorescent T5 HO Elec	F54T5	2	54	1.0	108.0	X		2	216
X	70w Metal Halide	M70	1	70	1.0	95.0	X		5	475
Y	(2) 24w Compact Fluorescent Quad 2 Pin	CFQ24W/G24d-3	2	24	1.0	52.0	X		4	208

PAGE TOTAL: 18,392
BUILDING TOTAL (sum of all pages): 18,392
PORTABLE LIGHTING (From LTG-3-C): 2,702
CONTROL CREDIT (From LTG-4-C): 858
ADJUSTED ACTUAL WATTS: 20,235

CERTIFICATE OF COMPLIANCE (Part 2 of 4) — LTG-1-C

PROJECT NAME: City of Fontana — DATE: 2/3/2006

INSTALLED INTERIOR LIGHTING POWER FOR CONDITIONED AND UNCONDITIONED SPACES

	INSTALLED WATTS
INSTALLED LIGHTING, CONDITIONED SPACES (From LTG-2-C)	18,392
PORTABLE LIGHTING (From LTG-3-C)	2,702
LIGHTING CONTROL CREDIT, CONDITIONED SPACES (From LTG-4-C)	858
CONDITIONED SPACE ADJUSTED INSTALLED LIGHTING POWER	20,235
INSTALLED LIGHTING, UNCONDITIONED SPACES (From LTG-2-C)	0
LIGHTING CONTROL CREDIT, UNCONDITIONED SPACES (From LTG-4-C)	0
UNCONDITIONED SPACE ADJUSTED INSTALLED LIGHTING POWER	0

ALLOWED INTERIOR LIGHTING POWER FOR CONDITIONED SPACES

- [X] COMPLETE BUILDING METHOD (From LTG-5-C)
- [ ] AREA CATEGORY METHOD (From LTG-5-C)
- [ ] TAILORED METHOD (From LTG-5-C)

ALLOWED LIGHTING POWER — ALLOWED WATTS: 28,876

ALTERNATE COMPLIANCE

- [ ] PERFORMANCE METHOD
- [ ] COMMMON LIGHTING SYSTEM (From LTG-8-C)

ALLOWED INTERIOR LIGHTING POWER FOR UNCONDITIONED SPACES (From LTG-5-C): 0

MANDATORY INTERIOR AND DAYLIGHTING AUTOMATIC CONTROLS

CONTROL LOCATION (Room #)	CONTROL IDENTIFICATION	CONTROL TYPE (Auto Time Switch, Dimming, etc.)	SPACE CONTROLLED	Check if Daylighting	NOTE TO FIELD

NOTES TO FIELD - For Building Department Use Only

LIGHTING MANDATORY MEASURES — LTG-MM

PROJECT NAME: City of Fontana — DATE: 2/3/2006

DESCRIPTION	Designer	Enforcement
[X] § 131(d)1 For every floor, all interior lighting systems shall be equipped with a separate automatic control to shut off the lighting. This automatic control shall meet the requirements of Section 119 and may be an occupancy sensor, automatic time switch, or other device capable of automatically shutting off the lighting.		
[X] § 131(d)2 Override for Building Lighting Shut-off: The automatic building shut-off system is provided with a manual, accessible override switch in sight of the lights. The area of override is not to exceed 5,000 square feet.		
[X] § 119(h) Automatic Control Devices Certified: All automatic control devices specified are certified, all alternate equipment shall be certified and installed as directed by the manufacturer.		
[X] § 111 Fluorescent Ballast and Luminaires Certified: All fluorescent fixtures specified for the project are certified and listed in the Directory. All installed fixtures shall be certified.		
[ ] § 132 Tandem Wiring for One and Three Lamp Fluorescent Fixtures: All one and three lamp fluorescent fixtures are tandem wired with two lamp ballasts where required by Standards Section 132; or all one and three lamp fluorescent fixtures are specified with electronic high-frequency ballasts and are exempt from tandem wiring requirements.		
[X] § 131(a) Individual Room/Area Controls: Each room and area in this building is equipped with a separate switch or occupancy sensor device for each area with floor-to-ceiling walls.		
[X] § 131(b) Uniform Reduction for Individual Rooms: All rooms and areas greater than 100 square feet and more than 0.8 watts per square foot of lighting load shall be controlled with bi-level switching for uniform reduction of lighting within the room.		
[X] § 131(c) Daylight Area Control: All rooms with windows and skylights that are greater than 250 square feet and that allow for the effective use of daylight in the area shall have 50% of the lamps in each daylit area controlled by a separate switch; or the effective use of daylight cannot be accomplished because the windows are continuously shaded by a building on the adjacent lot. Diagram of shading during different times of the year is included on plans.		
[ ] § 131(e) Display Lighting. Display lighting shall be separately switched on circuits that are 20 amps or less.		

PORTABLE LIGHTING WORKSHEET — LTG-3-C

PROJECT NAME: City of Fontana — DATE: 2/3/2006

TABLE 1 - PORTABLE LIGHTING NOT SHOWN ON PLANS FOR OFFICE AREAS >250 SQUARE FEET

A ROOM # OR ZONE ID	B DEFAULT (W/sqft)	C AREA (SF)	D TOTAL WATTS (B X C)
2nd Floor	0.2	13,508	2,702
TOTAL		13,508	2,702

TABLE 2 - PORTABLE LIGHTING SHOWN ON PLANS FOR OFFICE AREAS >250 SQUARE FEET

A ROOM # OR ZONE ID	B PORTABLE LIGHTING Description	# OF FIXT.	C LUMIN. WATTS PER FIXTURE	D TASK AREA (SF)	E # OF TASK AREAS	F TOTAL AREA (SF) (D x E)	G TOTAL WATTS (C x E)
RESTROOMS				597	1	597	
SM CONFERENCE				173	1	173	
LG CONFERENCE				785	1	785	
SUPPORT				747	1	747	
RECEPTION				509	1	509	
SM OFFICES				2,320	1	2,320	
LG OFFICES				6,945	1	6,945	
STORAGE				667	1	667	
					TOTAL	12,743	0

TABLE 3 - PLANS SHOW PORTABLE LIGHTING IS NOT REQUIRED FOR OFFICE AREAS > 250 SQUARE FEET

ROOM # OR ZONE ID	TOTAL AREA (SF)
TOTAL	0

Designer needs to provide detailed documentation that the lighting level provided by the overhead lighting meets the needs of the space. The details include luminaire types and mounting locations relative to work areas.

BUILDING SUMMARY - PORTABLE LIGHTING

BUILDING SUMMARY	TOTAL AREA (SF) (FROM TABLES 1+2+3)	TOTAL WATTS
BUILDING TOTAL	26,251	2,702

CERTIFICATE OF COMPLIANCE (Part 4 of 4) — LTG-1-C

PROJECT NAME: City of Fontana — DATE: 2/3/2006

Designer:
This form is to be used by the designer and attached to the plans. Listed below are all the acceptance tests for lighting systems. The designer is required to check the boxes by all acceptance tests that apply and list all equipment that require an acceptance test. If all equipment of a certain type requires a test, list the equipment description and the number of systems to be tested in parentheses. The NJ number designates the Section in the Appendix of the Nonresidential ACM Manual that describes the test. Also indicate the person responsible for performing the tests (i.e. the installing contractor, design professional or an agent selected by the owner). Since this form will be part of the plans, completion of this section will allow the responsible party to budget for the scope of work appropriately.

Building Departments:
Before an occupancy permit is granted for a newly constructed building or space, or a new lighting system system serving a building or space is operated for normal use, all control devices serving the building or space shall be certified as meeting the Acceptance Requirements for Code Compliance. In addition a Certificate of Acceptance, LTG-1-A, Forms shall be submitted to the building department that:

A. Certifies plans, specifications, installation certificates, and operating and maintenance information meet the requirements of§10-103(b) and Title 24 Part 6.

Test Description	Test Performed By:
[ ] LTG-2-A: Lighting Control Acceptance Document - Occupancy Sensor Acceptance - Manual Daylight Controls Acceptance - Automatic Time Switch Control Acceptance Equipment requiring acceptance testing ____	
[ ] LTG-3-A: Automatic Daylighting Controls Acceptance Document Equipment requiring acceptance testing ____	

CERTIFICATE OF COMPLIANCE (Part 1 of 4) — LTG-1-C

PROJECT NAME: City of Fontana — DATE: 2/3/2006
PROJECT ADDRESS: 8333 Sierra Ave Fontana — Building Permit #
PRINCIPAL DESIGNER - LIGHTING: GLP Engineering — TELEPHONE: 949-428-8800
DOCUMENTATION AUTHOR: GLP Engineering, Inc. — TELEPHONE: (949) 428-8800 — Checked by/Date Enforcement Agency Use

GENERAL INFORMATION

DATE OF PLANS: 02-03-06 — BUILDING CONDITIONED FLOOR AREA: 26,251 Sq.Ft. — CLIMATE ZONE: 10

BUILDING TYPE: [X] NONRESIDENTIAL [ ] HIGH RISE RESIDENTIAL [ ] HOTEL/MOTEL GUEST ROOM [X] CONDITIONED SPACES [ ] UNCONDITIONED SPACES [ ] INDOOR & OUTDOOR SIGNS

PHASE OF CONSTRUCTION: [X] NEW CONSTRUCTION [ ] ADDITION [ ] ALTERATION

METHOD OF LIGHTING COMPLIANCE: [X] COMPLETE BUILDING [ ] AREA CATEGORY [ ] TAILORED [ ] PERFORMANCE [ ] COMMON LIGHTING

STATEMENT OF COMPLIANCE

This Certificate of Compliance lists the building features and performance specifications needed to comply with Title 24, Parts 1 and 6 of the California Code of Regulations. This certificate applies only to building lighting requirements.

The documentation preparer hereby certifies that the documentation is accurate and complete.

DOCUMENTATION AUTHOR: Kathy Waterman — SIGNATURE: [signature] — DATE: 4-17-06

The Principal Lighting Designer hereby certifies that the proposed building design represented in this set of construction documents is consistent with the other compliance forms and worksheets, with the specifications, and with any other calculations submitted with this permit application. The proposed building has been designed to meet the lighting requirements contained in Sections 110, 119, 130 through 132, and 146, 148 and 149 of Title 24, Part 6.

Please Check One: (These sections of the Business and Professions Code are printed in full in the Nonresidential Manual.)

- [X] I hereby affirm that I am eligible under the provisions of Division 3 of the Business and Professions Code to sign this document as the person responsible for its preparation; and that I am licensed in the State of California as a civil engineer or electrical engineer, or I am a licensed architect.
- [ ] I affirm that I am eligible under the provisions of Division 3 of the Business and Professions Code by Section 5537.2 or 6737.3 to sign this document as the person responsible for its preparation; and that I am a licensed contractor performing this work.
- [ ] I affirm that I am eligible under the exemption to Division 3 of the Business and Professions Code to sign this document because it pertains to a structure or type of work described as exempt pursuant to Business and Professions Code Sections 5537, 5538 and 6737.1.

PRINCIPAL LIGHTING DESIGNER - NAME: GLP Engineering — SIGNATURE: [signature] — DATE: 4/17-06 — LIC #: E17252

LIGHTING MANDATORY MEASURES

Indicate location on plans of Note Block for Mandatory Measures

LIGHTING COMPLIANCE FORMS & WORKSHEETS (Check box if worksheet is included)

- [X] LTG-1-C, Parts 1 of 4 and 2 of 4: Certificate of Compliance. Part 1 of 4 and 2 of 4 are required for all submittals
- [X] LTG-1-C, Part 3 of 4: Certificate of Compliance. Part 3 of 4 submittal is required only if Control Credits are claimed
- [X] LTG-1-C, Part 4 of 4: Certificate of Compliance. Part 4 of 4 submittal is required when lighting controls are installed
- [X] LTG-2-C: Interior Lighting Schedule
- [X] LTG-3-C: Portable Lighting Worksheet
- [X] LTG-4-C: Lighting Controls Credit Worksheet
- [X] LTG-5-C: Interior Lighting Power Allowance
- [X] LTG-6-C: Tailored Method Worksheet
- [ ] LTG-7-C: Room Cavity Ratio Worksheet
- [ ] LTG-8-C: Common Lighting Systems Method Worksheet
- [ ] LTG-9-C: Line Voltage Track Lighting Worksheet

APPROVED
MAY 01 2006
BUILDING & SAFETY
CITY OF FONTANA

APPROVED
REVIEWED BY ____ DATE
Approval of these plans shall not be construed to be a permit for, or an approval of any violation of any of ... this jurisdiction.

LANGDON WILSON
ARCHITECTURE PLANNING INTERIORS
18800 VON KARMAN AVENUE, SUITE 200
IRVINE, CALIFORNIA 92612-1517
949 - 833 - 9193

GLP Engineering, Inc.
Mechanical and Electrical Engineers
1751 East Garry Avenue
Santa Ana, CA 92705-5814
Telephone (949) 428-8800
Fax (949) 428-8805
GLP # 123.002

CITY OF FONTANA
DEVELOPMENT SERVICES ORGANIZATION BUILDING
8353 SIERRA AVENUE FONTANA, CALIFORNIA

CITY OF FONTANA CALIFORNIA

REV.	DATE	ISSUED FOR	REV.	DATE	ISSUED FOR

Stamp
REGISTERED PROFESSIONAL ENGINEER — GARY L. PETRAK — No. E17252 — EXP. 6-30-06 — ELECTRICAL — STATE OF CALIFORNIA

DATE: 04-14-06 — SCALE: NONE
DRAWN BY: GLP
JOB NO. L454-000 — CADD TITLE: 123002_E501
SHEET TITLE: TITLE 24 DOCUMENTS
SHEET NUMBER: E501

©Copyright 2005 Langdon Wilson

PERMIT SET / BID SET 04-17-06

P:\Clients\Langdon Wilson\Fontana City Hall 123.002\Drawings\123002_E501.dwg Apr 17, 2006 - 7:54am Kathy

GENERAL NOTES

1. ALL INSTALLATIONS SHALL COMPLY WITH ANSI TIA/EIA-568B, 569, 606, 607 AND ALL APPLICABLE LOCAL CODES.
2. ALL WORK SHALL COMPLY WITH THE CURRENT EDITION OF THE NATIONAL ELECTRICAL CODE AND ALL OTHER APPLICABLE FEDERAL, STATE AND LOCAL CODES. WHERE THE CONSTRUCTION DOCUMENTS INDICATE MORE RESTRICTIVE REQUIREMENTS, THE CONSTRUCTION DOCUMENTS SHALL GOVERN BUT THE CONSTRUCTION DOCUMENTS SHALL NOT BE INTERPRETED AS AUTHORITY TO VIOLATE ANY CODE OR REGULATION.
3. IN THE EVENT OF A CONFLICT OR INCONSISTENCY BETWEEN ITEMS INDICATED ON THE PLANS AND/OR SPECIFICATIONS OR WITH CODE REQUIREMENTS, THE NOTE, SPECIFICATION OR CODE WHICH PRESCRIBES AND ESTABLISHES THE MORE COMPLETE JOB OR THE HIGHER STANDARD SHALL PREVAIL.
4. OMISSIONS FROM THE DRAWINGS OR SPECIFICATIONS OR THE MISDESCRIPTION OF DETAILS OF WORK WHICH ARE MANIFESTLY NECESSARY TO CARRY OUT THE INTENT OF THE DRAWINGS AND SPECIFICATIONS, OR WHICH ARE CUSTOMARILY PERFORMED, SHALL NOT RELIEVE THE CONTRACTOR FROM PERFORMING SUCH OMITTED OR MISDESCRIBED DETAILS OF THE WORK BUT THEY SHALL BE PERFORMED AS IF FULLY AND CORRECTLY SET FORTH AND DESCRIBED IN THE DRAWINGS AND SPECIFICATIONS.
5. THE CONTRACTOR SHALL CHECK ALL DRAWINGS IMMEDIATELY UPON THEIR RECEIPT AND SHALL PROMPTLY NOTIFY A CUSTOMER REPRESENTATIVE OF ANY DISCREPANCIES. FIGURES MARKED ON DRAWINGS SHALL IN GENERAL BE FOLLOWED IN PREFERENCE TO SCALE MEASUREMENTS. LARGE SCALE DRAWINGS SHALL IN GENERAL GOVERN SMALL SCALE DRAWINGS. THE CONTRACTOR SHALL COMPARE ALL DRAWINGS AND VERIFY THE FIGURES BEFORE LAYING OUT THE WORK AND WILL BE RESPONSIBLE FOR ANY ERRORS WHICH MIGHT HAVE BEEN AVOIDED THEREBY.
6. ALL MATERIALS AND EQUIPMENT SHALL BE NEW AND SHALL BEAR THE UNDERWRITERS LABEL (UL) AND SHALL BE INSTALLED IN THE MANNER FOR WHICH THEY ARE DESIGNED AND APPROVED.
7. THE CONTRACTOR SHALL NOT BORE, NOTCH OR IN ANY WAY CUT INTO ANY STRUCTURAL MEMBER WITHOUT WRITTEN APPROVAL FROM A CUSTOMER REPRESENTATIVE.
8. FOR PURPOSES OF CLEARNESS AND LEGIBILITY, THE TELECOM DRAWINGS ARE ESSENTIALLY DIAGRAMMATIC. THE CONTRACTOR SHALL VERIFY ALL CONDITIONS, INFORMATION AS INDICATED ON THE DRAWINGS AND IN THE SPECIFICATION SECTIONS WHERE TELECOM WORK INTERFACES WITH OTHER TRADES.
9. THE CONTRACTOR SHALL MAINTAIN AS-BUILT DRAWINGS TO REFLECT ALL CHANGES MADE DURING CONSTRUCTION AND ANY DEVIATIONS FROM THE DRAWINGS. THIS INCLUDES DEVIATIONS FROM OUTLET NUMBERS AND ANY ADDITION, DELETION OR RELOCATION OF OUTLETS SHOWN ON WORKING DRAWINGS. IN ADDITION CONTRACTOR SHALL PROVIDE CAD FILES OF AS-BUILT DWGS.
10. A CUSTOMER REPRESENTATIVE IS TO BE NOTIFIED OF ANY CHANGE OF ELEC/TEL. OUTLETS CAUSED BY FIELD CONDITION CONFLICTS.
11. ALL CONDUITS AND PIPING SHALL BE CONCEALED IN PARTITIONS OR CEILING SPACE U.N.O.
12. ALL STATION CABLES SHALL BE NEATLY DRESSED AND SECURED AS REQUIRED.
13. USE CAT 5 RATED "J" HOOKS WITHIN CEILINGS, (SPACED MAXIMUM 4' INTERVALS) CABLE BUNDLES SHALL NOT EXCEED 2" IN DIAMETER PER HANGER. DO NOT USE CEILING TILE WIRE HANGERS, WATER OR ELECTRICAL PIPES, OR LIGHT FIXTURES TO HANG CABLE. CABLE MUST BE A MINIMUM OF SIX INCHES ABOVE THE CEILING TILE AND MUST NOT COME WITHIN TWELVE INCHES OF A LIGHT FIXTURE.
14. A RISER CABLE ASSIGNMENT RECORD SHEET SHALL BE PREPARED (TYPED) PRIOR TO START OF ACCEPTANCE TESTING. CONTRACTOR SHALL SUBMIT ALL FLOOR PLANS/ASBUILTS, PREPARED IN ELECTRONIC "CAD" FORMAT. ASBUILTS SHALL CONTAIN ALL STATION OUTLET/JACK NUMBERS, CABLE PATHWAYS AND ANY MODIFICATIONS TO DESIGN. LABELING TO BE COORDINATED.
15. ALL FIBER OPTIC STATION AND RISER CABLE SHALL BE TESTED END-TO-END PER SPECIFICATIONS.
16. THE CONTRACTOR SHALL BE RESPONSIBLE FOR REMOVAL AND REPLACEMENT OF CEILING TILE INCLUDING REPLACEMENT OF BROKEN, DAMAGED OR SOILED TILES.
17. ALL LOCATIONS PASSING THROUGH A FIRE OR A SMOKE BARRIER SYSTEM MUST BE FIRE STOPPED USING APPROVED (UL CLASSIFIED) FIRE STOP. MATERIAL INSTALLED PER THE MANUFACTURER'S INSTRUCTIONS. THIS SHALL INCLUDE WALL, FLOOR, OR CEILING PENETRATIONS FOR CONDUIT, SLEEVES, OR CABLE.
18. ALL STATION OUTLETS AND TERMINALS SHALL BE PROPERLY IDENTIFIED USING CUSTOMER'S STANDARD DISTRIBUTION NUMBERING SCHEME. ALL LABELS SHALL BE PREPRINTED OR TYPED.
19. EACH RISER CABLE SHALL BE EQUIPPED WITH A PERMANENT LABEL INDICATING PAIR OR STRAND COUNTS. BOTH ENDS OF EACH CABLE SHALL BE SO LABELED.
20. FIBER RISER CABLE SHALL BE PLACED WITH FIFTEEN FOOT MAINTENANCE LOOP AT BOTH ENDS OF THE RUN. THE MAINTENANCE LOOP SHALL BE SECURED IN SUCH A MANNER TO PROVIDE PROTECTION DURING SUBSEQUENT CABLE PULLS.
21. ANY DEVIATIONS FROM PLANS OR SPECS MUST BE APPROVED IN WRITING BY A CUSTOMER REPRESENTATIVE.
22. ALL STATION CABLES/OUTLETS SHALL BE TESTED AND DOCUMENTED PER THE SPECIFICATIONS.
23. ALL WORK MUST BE COMPLETED IN A NEAT AND PROFESSIONAL MANNER. THE WORK SITE SHALL BE KEPT CLEAN AND ALL PROPERTY DAMAGE REPAIRED. THE CONTRACTOR SHALL BE RESPONSIBLE FOR CONDUCTING DAILY CLEANUP OF THE WORK SITE.
24. LADDER RACK SHALL BE PLACED IN TELECOMMUNICATIONS ROOMS AS SHOWN ON DRAWINGS AND AS REQUIRED TO PROPERLY SECURE CABLES AND WIRE AND PROVIDE SEISMIC SUPPORT IN ACCORDANCE WITH LOCAL CODES.
25. PULL ROPES WILL BE PLACED IN ALL CONDUITS.
26. ALL FOOTAGES ON DRAWINGS ARE ESTIMATED AND MUST BE VERIFIED BY CONTRACTOR PRIOR TO ORDERING MATERIAL.
27. ALL WORK IS TO BE PERFORMED ACCORDING TO TIA/EIA STANDARDS AND MANUFACTURER'S SPECIFICATIONS.
28. CONTRACTOR SHALL PROVIDE ALL APPLICABLE LICENSES AND PERMITS.
29. CONTRACTOR SHALL REFER TO ELECTRICAL SHEETS FOR EXACT LOCATIONS OF MODULAR FURNITURE SUPPORTING COMMUNICATIONS CABLING.
30. CONTRACTOR SHALL REFER TO ARCHITECTURAL SHEETS FOR EXACT LOCATIONS OF ALL RATED WALL ASSEMBLIES.
31. DRAWINGS ARE DIAGRAMMATIC AND ARE INTENDED TO CONVEY SCOPE OF WORK AND TO INDICATE GENERAL ARRANGEMENT. THEY ARE NOT INTENDED TO SHOW EVERY DETAIL INCLUDING OFFSETS, FITTINGS OR EVERY STRUCTURAL DIFFICULTY THAT MAY BE ENCOUNTERED DURING WORK. EXCEPT AS OTHERWISE INDICATED, LOCATIONS OF ITEMS ARE APPROXIMATE ONLY. EXACT LOCATIONS NECESSARY TO SECURE PROPER CONDITIONS AND RESULTS MUST BE DETERMINED AT PROJECT SITE AND MUST BE APPROVED BY THE OWNER'S REPRESENTATIVE.
32. EXCEPT OTHERWISE INDICATED, MAKE REASONABLE MODIFICATIONS IN LAYOUTS AS NEEDED TO PREVENT CONFLICT WITH OTHER WORK OR PROPER EXECUTION OF WORK.
33. INCLUDE WORK NOT USUALLY SHOWN OR SPECIFIED, BUT NECESSARY FOR PROPER INSTALLATION AND OPERATION OF A SYSTEM OR PIECE OF EQUIPMENT IN WORK.

ABBREVIATIONS

ABBREVIATION	DESCRIPTION
A OR AMP	AMPERES
AFF	ABOVE FINISHED FLOOR
ARCH.	ARCHITECT; ARCHITECTURAL
AWG	AMERICAN WIRE GAUGE
C	CONDUIT
CKT	CIRCUIT
CLG.	CEILING
C.O.	CONDUIT ONLY WITH PULL WIRE
CU	COPPER
DWG	DRAWING
EA	EACH
EMT	ELECTRICAL METALLIC TUBING
EQUIP	EQUIPMENT
EXIST / (E)	EXISTING
FIN.	FINISH
FIXT	FIXTURE
FLR	FLOOR
F.O.C.	FIBER OPTIC CABLE
FT	FEET
GND	GROUND
JB	JUNCTION BOX
MH	MOUNTING HEIGHT
MTG	MOUNTING
N	NORTH
(N)	NEW
NEC	NATIONAL ELECTRICAL CODE
NIC	NOT IN CONTRACT
NO.	NUMBER
P.B.	PULLBOX
PNL	PANEL
PWR	POWER
REC/RECEPT	RECEPTACLE
REQ'D	REQUIRED
RM	ROOM
SCHED.	SCHEDULE
SF	SQUARE FEET
SHT	SHEET
SPECS	SPECIFICATIONS
TYP	TYPICAL
UG	UNDERGROUND
U.N.O.	UNLESS NOTED OTHERWISE
W/	WITH
W/O	WITHOUT

IN THE EVENT ABBREVIATIONS NOT MENTIONED HEREIN ARE USED, REFERENCE WILL BE MADE TO ANSI Y1.1, MILITARY STANDARD ABBREVIATIONS, AND OTHER STANDARD INDUSTRY CONVENTIONS.

SYMBOL LIST

- CONDUIT CONCEALED IN FLOOR SLAB OR UNDERGROUND
- EXPOSED CONDUIT
- CONDUIT STUBBED OUT
- CONDUIT DOWN
- CONDUIT UP
- GROUND CONNECTION
- CONDUIT STUBBED DOWN
- CONDUIT STUBBED UP
- JUNCTION BOX, SIZE PER NEC
- JUNCTION BOX, WALL MOUNTED, SIZE PER NEC (CONFIRM LOCATION AND HEIGHT)
- DUPLEX RECEPTACLE, CEILING MOUNTED (20 AMP, 3 WIRE, 120 VOLT)
- SINGLE RECEPTACLE, FLUSH IN WALL, +15" (20 AMP, 3 WIRE, 120 VOLT)
- DUPLEX RECEPTACLE, FLUSH IN WALL, +15" (20 AMP, 3 WIRE, 120 VOLT)
- DOUBLE DUPLEX RECEPTACLE, FLUSH IN WALL (20 AMP, 3 WIRE, 120 VOLT)
- DUPLEX COMPUTER GRADE RECEPTACLE, FLUSH IN WALL, ORANGE IN COLOR +15" (20 AMP, 3 WIRE, 120 VOLT)
- GFCI — DUPLEX RECEPTACLE, WITH GROUND FAULT INTERRUPTER (20 AMP, 3 WIRE, 120 VOLT)
- DUPLEX RECEPTACLE, FLUSH IN FLOOR IN WT J-BOX (20 AMP, 3 WIRE, 120 VOLT)
- QUAD RECEPTACLE, FLUSH IN FLOOR IN WT J-BOX (20 AMP, 3 WIRE, 120 VOLT)
- DUPLEX RECEPTACLE, FLUSH IN WALL, CONTROLLED BY SWITCH +15" (20 AMP, 3 WIRE, 120 VOLT)
- DUAL COMPARTMENT MULTI-OUTLET ASSEMBLY RACEWAY FOR POWER AND TEL/DATA OUTLETS, SPACED 36" O.C.
- TVSS — TRANSIENT VOLT SUPRESSION SYSTEM
- T OR — TRANSFORMER
- (1) — REFERENCE NOTE 1, UON
- 1. — GENERAL NOTE 1, UON
- BRANCH PANELBOARD, SURFACE WALL MOUNTED
- BRANCH PANELBOARD, FLUSH WALL MOUNTED
- DISTRIBUTION BOARD
- VOICE/DATA OUTLET = PROVIDE 4" SQUARE JUNCTION BOX WITH SINGLE GANG PLASTER RING AND 1" CONDUIT WITH PLASTIC BUSHING. OUTLET SHALL BE MOUNTED +18" AFF U.N.O. ELECTRICAL CONTRACTOR SHALL PROVIDE OUTLET BOX AND CONDUIT PATHWAYS. COMMUNICATIONS CONTRACTOR SHALL PROVIDE ALL CABLE AND CONNECTIVITY HARDWARE. (4) CATEGORY 6, 4-PAIR CABLES. TERMINATED TO (4) CATEGORY 6 RJ-45 JACKS AND 4-PORT FACEPLATE.
- WALL TELEPHONE OUTLET = PROVIDE 4" SQUARE JUNCTION BOX WITH SINGLE GANG PLASTER RING AND 3/4" CONDUIT WITH PLASTIC BUSHING. OUTLET SHALL BE MOUNTED +48" AFF. ELECTRICAL CONTRACTOR SHALL PROVIDE OUTLET BOX AND CONDUIT PATHWAYS. COMMUNICATIONS CONTRACTOR SHALL PROVIDE ALL CABLE AND CONNECTIVITY HARDWARE, (1) CATEGORY 6, 4-PAIR CABLE AND (1) WALL MOUNTED TELEPHONE FACEPLATE.
- FLUSH FLOOR OUTLET = PROVIDE FLOOR BOX AND 1" CONDUIT WITH PLASTIC BUSHING. ELECTRICAL CONTRACTOR SHALL PROVIDE FLOOR BOX AND CONDUIT PATHWAYS. COMMUNICATIONS CONTRACTOR SHALL PROVIDE ALL CABLE AND CONNECTIVITY HARDWARE. (4) CATEGORY 6 4-PAIR CABLES TERMINATED TO (4) CATEGORY 6 RJ-45 JACKS AND 1 FLOOR BOX ADAPTOR FRAME.
- COMMUNICATIONS CONTRACTOR SHALL PROVIDE FLUSH CEILING MOUNT PAGING SYSTEM SPEAKER WITH VOLUME CONTROL.
- TELEVISION OUTLET = PROVIDE 4" SQUARE JUNCTION BOX WITH SINGLE GANG PLASTER RING AND 3/4" CONDUIT WITH PLASTIC BUSHING. OUTLET SHALL BE MOUNTED +18" AFF U.N.O. ELECTRICAL CONTRACTOR SHALL PROVIDE OUTLET BOX AND CONDUIT PATHWAYS. COMMUNICATIONS CONTRACTOR SHALL PROVIDE ALL CABLE AND CONNECTIVITY HARDWARE. (1) RG 6 WITH F CONNECTOR AND FACEPLATE.
- CABLE RUNWAY, SIZE AS NOTED ON PLANS
- (2) — DRAWING KEY NOTES
- XX/XX — DETAIL, OR PARTIAL PLAN IDENTIFICATION; SHEET NUMBER
- XX/XX — ELEVATION IDENTIFICATION; SHEET NUMBER

INDEX OF DRAWINGS

T-001	TELECOMMUNICATION GENERAL NOTES
T-101	TELECOMMUNICATIONS SITE PLAN
T-201	FIRST FLOOR TELECOMMUNICATIONS PLAN
T-202	SECOND FLOOR TELECOMMUNICATIONS PLAN
T-301	IDF PLAN VIEW & TELECOMMUNICATIONS BACKBONE DIAGRAM
T-401	TELECOMUNICATIONS DETAILS

APPROVED
MAY 0 1 2006
BUILDING & SAFETY
CITY OF FONTANA

APPROVED
REVIEWED BY ______ DATE
Approved of these plans shall not be construed to be a permit for, or an approval of any violation of any of the provisions of the state or local laws. One set of approved plans must be kept on the job until completion.

LANGDON WILSON
ARCHITECTURE
PLANNING
INTERIORS

18800 VON KARMAN AVENUE, SUITE 200
IRVINE, CALIFORNIA 92612-1517
949 - 833 - 9193

STRUCTURAL
KPFF 949 - 252 - 1022
MECHANICAL
TKSC 949 - 756 - 0565
ELECTRICAL
GLP 714 - 751 - 1851
LANDSCAPE
FRANK RADMACHER 714 - 832 - 1774
CIVIL ENGINEER
IKE CONSULTING 714 - 241 - 0606
AUDIO / VISUAL
VENEKLASEN ASSOCIATES 310 - 450 - 1733
DATA TELEPHONE
PLANNET CONSULTING 714 - 982 - 5800

CITY OF FONTANA
DEVELOPMENT SERVICES
ORGANIZATION BUILDING
8353 SIERRA AVENUE FONTANA, CALIFORNIA

REV.	DATE	ISSUED FOR	REV.	DATE	ISSUED FOR
	4.17.06	PERMIT SET			
	4.17.06	BID SET			

Stamp

DATE: SCALE: AS NOTED
DRAWN BY:
JOB NO. L454-000 CADD TITLE:T001
SHEET TITLE:
TELECOMMUNICATIONS GENERAL NOTES
SHEET NUMBER:
T001

© Copyright 2005 Langdon Wilson

PLAN CHECK #2 RESUBMITTAL 03-13-06

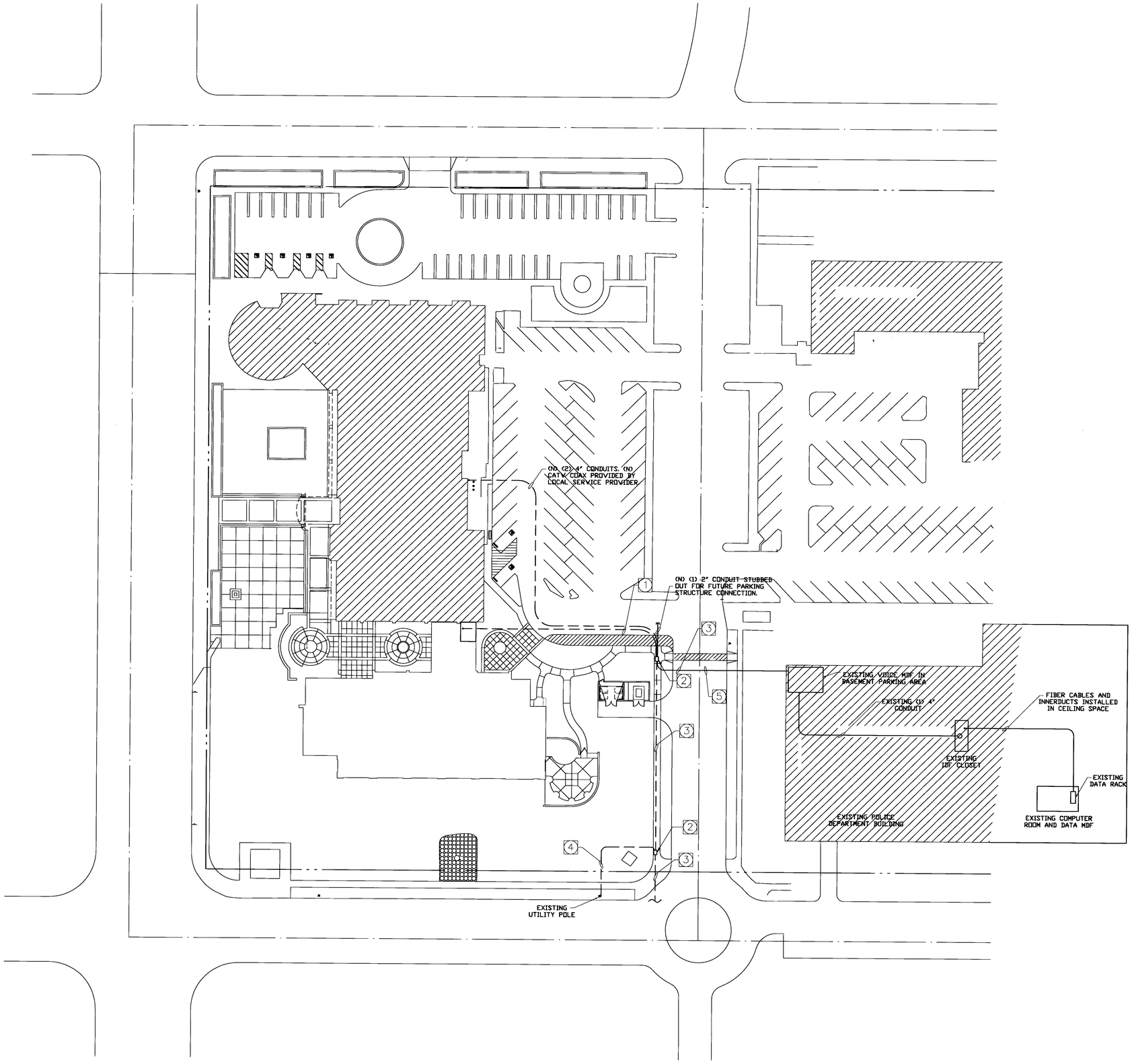

SPECIFIC PLAN NOTES

1. (3) NEW 4" UNDERGROUND CONDUITS FOR VOICE & DATA. (2) NEW 2" CONDUITS FOR CATV. PROVIDE AND INSTALL (1) NEW 400-PAIR COPPER AND (1) NEW 24-STRAND FIBER TO MDF. PROVIDE AND INSTALL CATV COAX TO UTILITY POLE.
2. EXISTING PULL BOX.
3. (6) EXISTING 4" CONDUITS FOR TELECOMMUNICATIONS TO POLICE DEPARTMENT.
4. (2) NEW 2" CONDUITS FOR CATV COAX TO CITY HALL AND DSO BUILDING TO BE PROVIDED BY CATV SERVICE PROVIDER.
5. NEW 24-STRAND & 400-PAIR TO DSO IDF FROM VOICE AND DATA MDF'S.

LANGDON WILSON
ARCHITECTURE
PLANNING
INTERIORS

18800 VON KARMAN AVENUE, SUITE 200
IRVINE, CALIFORNIA 92612-1517
949 – 833 – 9193

STRUCTURAL
KPFF 949 – 252 – 1022
MECHANICAL
TKSC 949 – 756 – 0565
ELECTRICAL
GLP 714 – 751 – 1851
LANDSCAPE
FRANK RADMACHER 714 – 832 – 1774
CIVIL ENGINEER
IKE CONSULTING 714 – 241 – 0606
AUDIO / VISUAL
VENEKLASEN ASSOCIATES 310 – 450 – 1733
DATA TELEPHONE
PLANNET CONSULTING 714 – 982 – 5800

CITY OF FONTANA

DEVELOPMENT SERVICES
ORGANIZATION BUILDING

8353 SIERRA AVENUE FONTANA, CALIFORNIA

REV.	DATE	ISSUED FOR	REV.	DATE	ISSUED FOR
	4.17.06	PERMIT SET			
	4.17.06	BID SET			

Stamp

APPROVED
MAY 11 2006
BUILDING & SAFETY
CITY OF FONTANA

APPROVED
REVIEWED BY _____ DATE

Approval of these plans shall not be construed to be a permit for, or an approval of any violation of any ordinance or law or the [illegible] construction.

DATE: SCALE: AS NOTED
DRAWN BY:
JOB NO. L454-000 CADD TITLE:T101

SHEET TITLE:
TELECOMMUNICATIONS SITE PLAN

SHEET NUMBER:
T101

© Copyright 2005 Langdon Wilson

PLAN CHECK #2 RESUBMITTAL 03-13-06

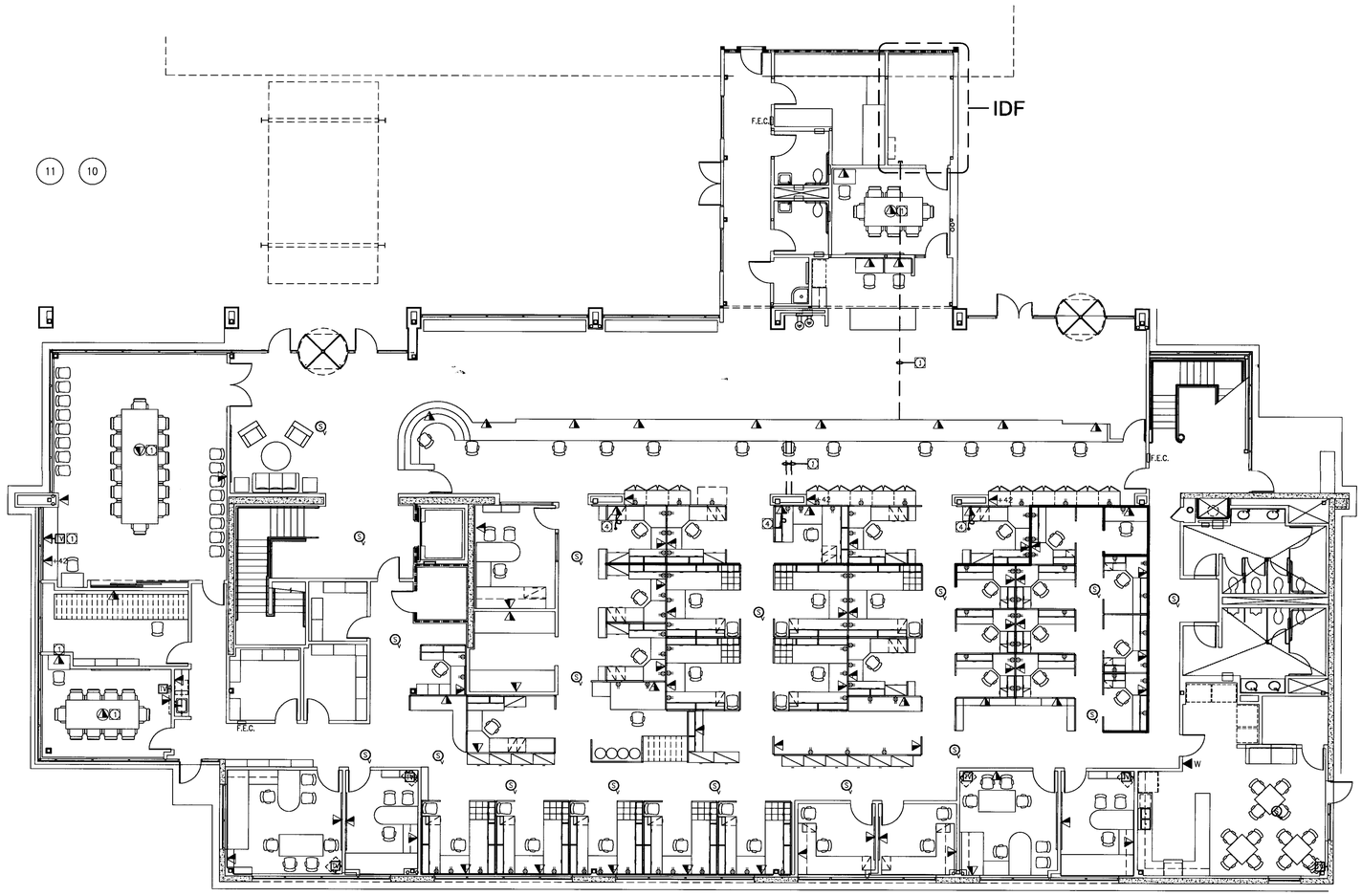

GROUND_FLOOR_PLAN 1

T201 1/8"=1'-0"

SPECIFIC PLAN NOTES

1. COORDINATE EXACT LOCATION WITH A/V CONTRACTOR.
2. ELECTRICAL CONTRACTOR TO PROVIDE (2) 2" CONDUITS FROM COUNTER RACEWAY SYSTEM TO ACCESSIBLE CEILING SPACE.
3. ELECTRICAL CONTRACTOR TO PROVIDE AND INSTALL (6) 4" CONDUIT SLEEVES TO SUPPORT CATEGORY 6 STATION CABLES CONDUIT TO RUN FROM FIRST FLOOR IDF TO FIRST FLOOR ACCESSIBLE CEILING SPACE.
4. CONNECTION FOR TELECOMMUNICATIONS TO FURNITURE SYSTEM.

LANGDON WILSON
ARCHITECTURE
PLANNING
INTERIORS

18800 VON KARMAN AVENUE, SUITE 200
IRVINE, CALIFORNIA 92612-1517
949 – 833 – 9193

STRUCTURAL
KPFF 949 – 252 – 1022
MECHANICAL
TKSC 949 – 756 – 0565
ELECTRICAL
GLP 714 – 751 – 1851
LANDSCAPE
FRANK RADMACHER 714 – 832 – 1774
CIVIL ENGINEER
IKE CONSULTING 714 – 241 – 0606
AUDIO / VISUAL
VENEKLASEN ASSOCIATES 310 – 450 – 1733
DATA TELEPHONE
PLANNET CONSULTING 714 – 982 – 5800

CITY OF FONTANA

DEVELOPMENT SERVICES
ORGANIZATION BUILDING

8353 SIERRA AVENUE FONTANA, CALIFORNIA

CITY OF FONTANA CALIFORNIA

REV.	DATE	ISSUED FOR	REV.	DATE	ISSUED FOR
	4.17.06	PERMIT SET			
	4.17.06	BID SET			

Stamp

APPROVED
MAY 11 2006
BUILDING & SAFETY
CITY OF FONTANA

DATE: SCALE: AS NOTED
DRAWN BY:
JOB NO. L454-000 CADD TITLE:T201

SHEET TITLE:
TELECOMMUNICATIONS GROUND FLOOR PLAN

SHEET NUMBER:
T201

© Copyright 2005 Langdon Wilson

PLAN CHECK #2 RESUBMITTAL 03-13-06

SPECIFIC PLAN NOTES

1. COORDINATE EXACT LOCATION WITH A/V CONTRACTOR.
2. ELECTRICAL CONTRACTOR TO PROVIDE AND INSTALL (3) 3" CONDUIT SLEEVES FROM FIRST FLOOR ACCESSIBLE CEILING SPACE TO THE SECOND FLOOR ACCESSIBL CEILING SOACE.
3. CONNECTION FOR TELECOMMUNICATIONS TO FURNITURE SYSTEM.

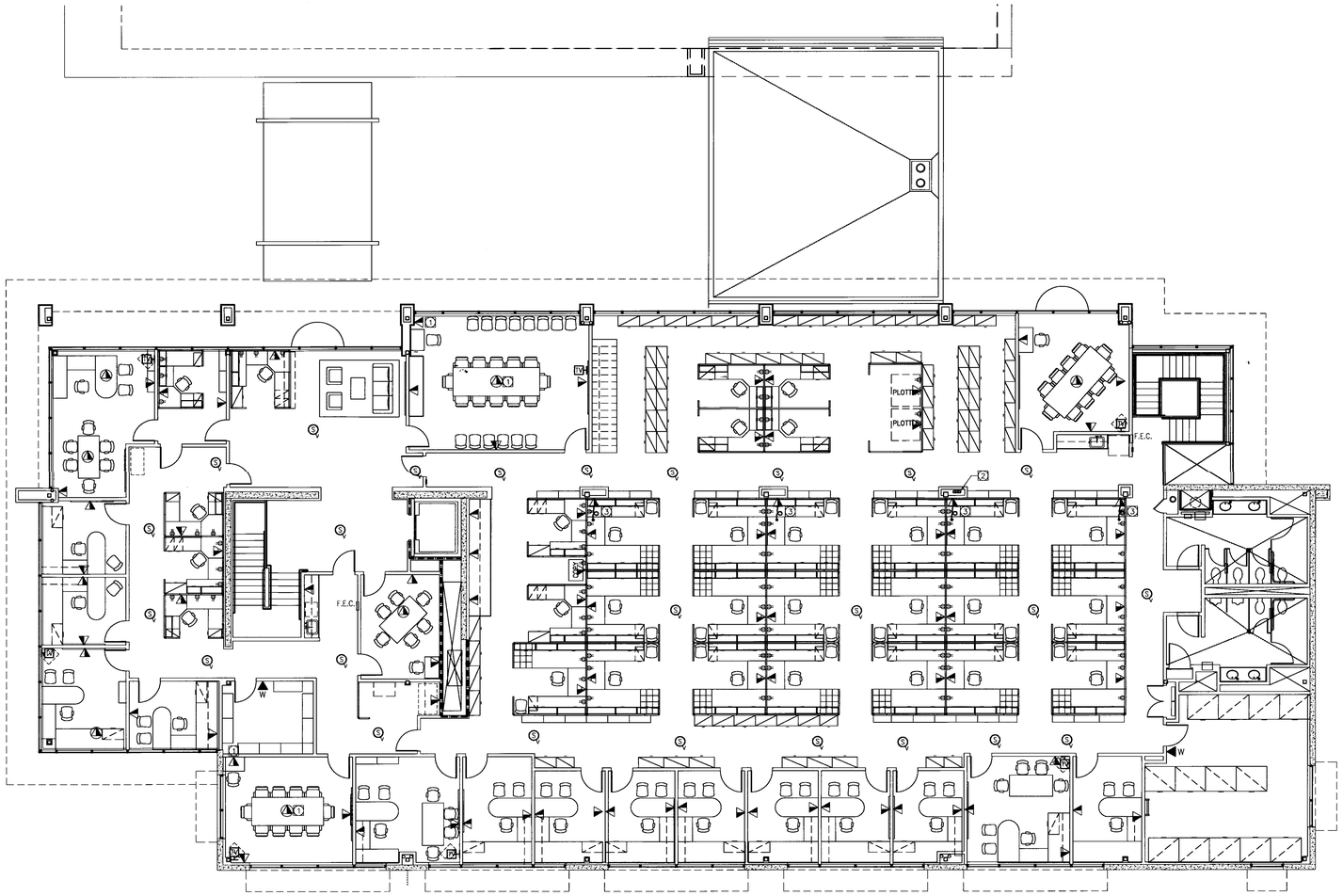

SECOND_FLOOR_PLAN 1

T202 1/8"=1'-0"

LANGDON WILSON
ARCHITECTURE
PLANNING
INTERIORS

18800 VON KARMAN AVENUE, SUITE 200
IRVINE, CALIFORNIA 92612-1517
949 - 833 - 9193

STRUCTURAL
KPFF 949 - 252 - 1022
MECHANICAL
TKSC 949 - 756 - 0565
ELECTRICAL
GLP 714 - 751 - 1851
LANDSCAPE
FRANK RADMACHER 714 - 832 - 1774
CIVIL ENGINEER
IKE CONSULTING 714 - 241 - 0606
AUDIO / VISUAL
VENEKLASEN ASSOCIATES 310 - 450 - 1733
DATA TELEPHONE
PLANNET CONSULTING 714 - 982 - 5800

CITY OF FONTANA

DEVELOPMENT SERVICES
ORGANIZATION BUILDING

8353 SIERRA AVENUE FONTANA, CALIFORNIA

REV.	DATE	ISSUED FOR	REV.	DATE	ISSUED FOR
	4.17.06	PERMIT SET			
	4.17.06	BID SET			

Stamp

APPROVED
MAY 01 2006
BUILDING & SAFETY
CITY OF FONTANA

DATE: SCALE: AS NOTED
DRAWN BY:
JOB NO. L454-000 CADD TITLE:T201

SHEET TITLE:
TELECOMMUNICATIONS SECOND FLOOR PLAN

SHEET NUMBER:
T202

© Copyright 2005 Langdon Wilson

PLAN CHECK #2 RESUBMITTAL 03-13-06

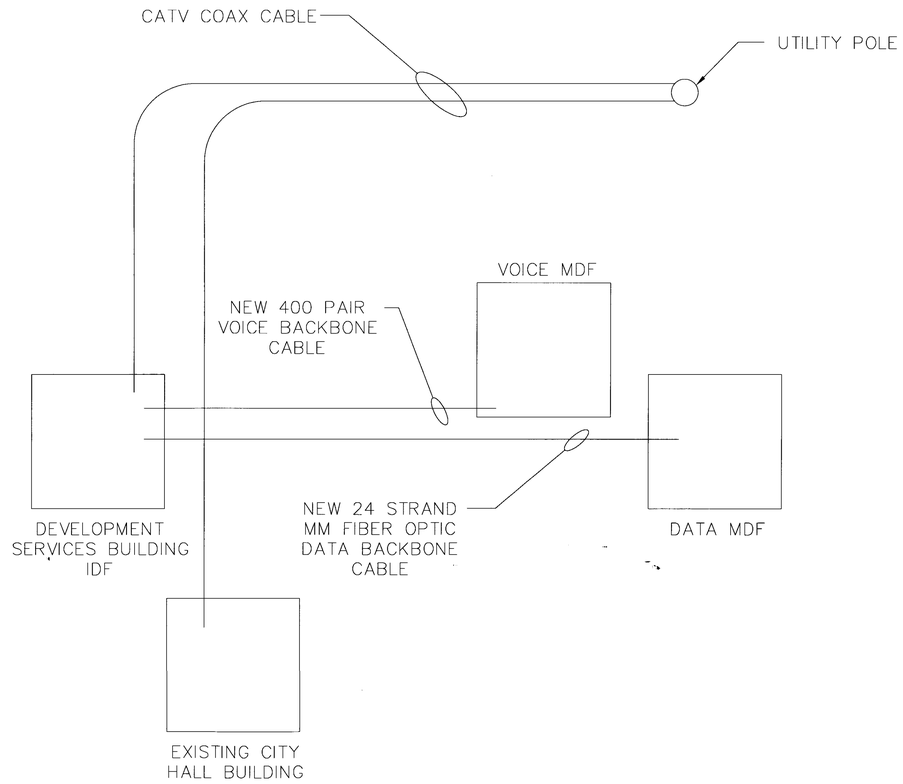

COPPER CABLE RISER DIAGRAM — SCALE: NTS — 2 / --

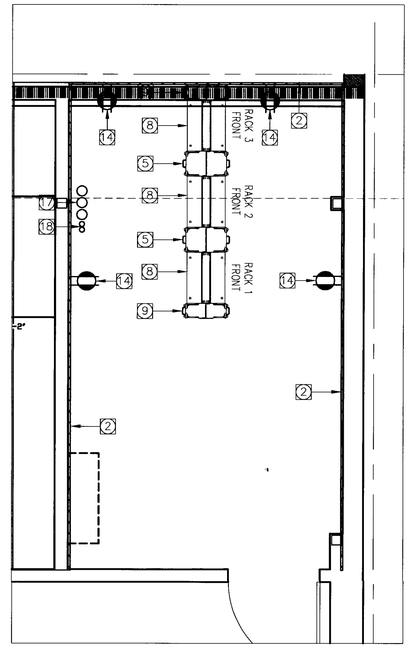

IDF ROOM EQUIPMENT PLAN — SCALE: 1/2" = 1' — 1 / --

SPECIFIC PLAN NOTES

1. PROVIDE AND INSTALL TELECOMMUNICATION GROUND BUS BAR. MOUNTED AT 7'-6" A.F.F. BUS BARS ARE CONNECTED BY A BACKBONE OF INSULATED, COPPER CABLE BETWEEN ALL TR'S. BACKBONE IS CONNECTED TO MAIN TELECOMMUNICATION BUS BAR IN THE BE. CONDUCTOR SIZE TO BE DETERMINED BASED OPON FIELD CONDITIONS.
2. PROVIDE AND INSTALL 3/4" FIRE RATED PLYWOOD BACKBOARD AT 6" A.F.F.
3. NOT USED.
4. PROVIDE AND INSTALL 2U, HORIZONTAL WIRE MANAGEMENT PANEL.
5. PROVIDE AND INSTALL 10" VERTICAL WIRE MANAGEMENT FRAME.
6. PROVIDE AND INSTALL 3U FIBER OPTIC ENCLOSURE FIBEROPTIC CABLE.
7. PROVIDE AND INSTALL 48-PORT, CATEGORY 6, ANGLED PATCH PANEL TO SUPPORT STATION CABLES.
8. PROVIDE AND INSTALL 19"x7' EQUIPMENT RACK.
9. PROVIDE AND INSTALL 6" VERTICAL WIRE MANAGEMENT FRAME.
10. PROVIDE AND INSTALL 12" CABLE RUNWAY.
11. NOT USED.
12. PROVIDE AND INSTALL RACK MOUNTED, 200-PAIR, 110 BLOCKS WITH JUMPER TROUGHS TO SUPPORT VOICE BACKBONE TERMINATIONS.
13. NOT USED.
14. 20 AMP 5-20R CONVENIENCE DUPLEX OUTLET MOUNTED AT 18" AFF.
15. (1) 120VAC, DEDICATED, SEPARATE CIRCUIT WITH 20 AMP 5-20R DUPLEX OUTLET MOUNTED AT SIDE OF CABLE RUNWAY.
16. PROVIDE AND INSTALL 1U, RACK MOUNT POWER STRIP.
17. (3) 4" UNDERGROUND CONDUITS TO SUPPORT TELECOMMUNICATIONS BACKBONE CABLES RUNNING TO MDF.
18. (2) 2" UNDERGROUND CONDUIT TO SUPPORT CATV COAXIAL CABLE.
19. NOT USED.
20. NOT USED.
21. (6) 4" CONDUIT SLEEVES TO SUPPORT CATAGORY 6 STATION CABLES. CONDUIT TO RUN FROM FIRST FLOOR IDF TO FIRST FLOOR ACCESSIBLE CEILING SPACE.

LANGDON WILSON
ARCHITECTURE
PLANNING
INTERIORS

18800 VON KARMAN AVENUE, SUITE 200
IRVINE, CALIFORNIA 92612-1517
949 - 833 - 9193

STRUCTURAL
KPFF 949 - 252 - 1022
MECHANICAL
TKSC 949 - 756 - 0565
ELECTRICAL
GLP 714 - 751 - 1851
LANDSCAPE
FRANK RADMACHER 714 - 832 - 1774
CIVIL ENGINEER
IKE CONSULTING 714 - 241 - 0606
AUDIO / VISUAL
VENEKLASEN ASSOCIATES 310 - 450 - 1733
DATA TELEPHONE
PLANNET CONSULTING 714 - 982 - 5800

CITY OF FONTANA
DEVELOPMENT SERVICES
ORGANIZATION BUILDING

8353 SIERRA AVENUE FONTANA, CALIFORNIA

CITY OF FONTANA CALIFORNIA

REV.	DATE	ISSUED FOR	REV.	DATE	ISSUED FOR
	4.17.06	PERMIT SET			
	4.17.06	BID SET			

Stamp

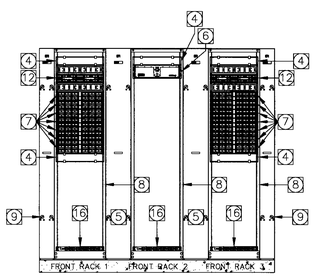

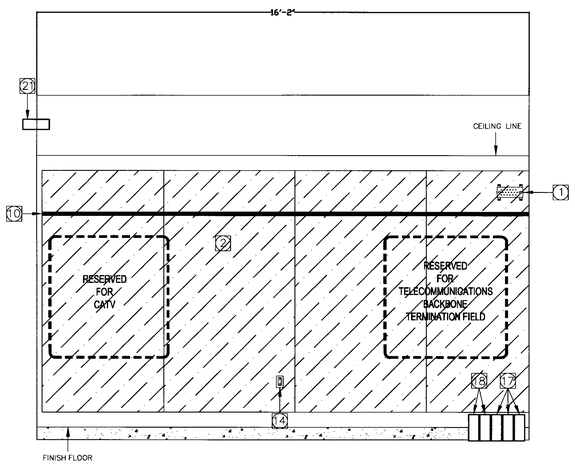

IDF ROOM RACK & BACKBOARD ELEVATIONS — SCALE: NTS — 4 / --

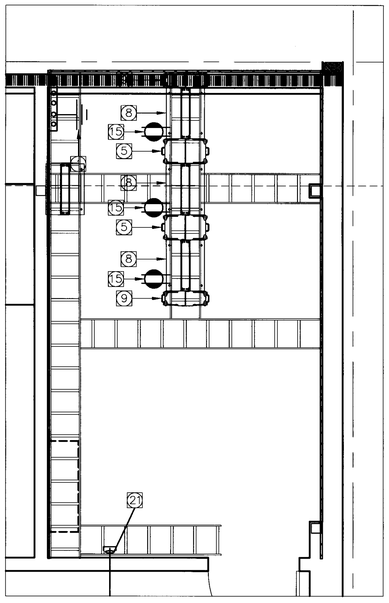

IDF ROOM CABLE RUNWAY PLAN — SCALE: 1/2" = 1' — 3 / --

APPROVED
MAY 01 2006
BUILDING & SAFETY
CITY OF FONTANA

APPROVED
REVIEWED BY _____ DATE _____

Approved of those items ... construed to be a ... approval of ...

DATE: SCALE: AS NOTED
DRAWN BY:
JOB NO. L454-000 CADD TITLE3301

SHEET TITLE:
TELECOMMUNICATIONS IDF ROOM PLAN

SHEET NUMBER:
T301

© Copyright 2005 Langdon Wilson

PLAN CHECK #2 RESUBMITTAL 03-13-06

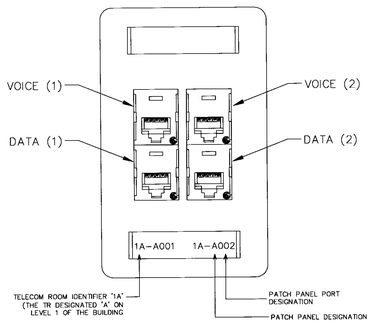

SAMPLE OUTLET LABELING DIAGRAM — SCALE: NTS — 5 / --

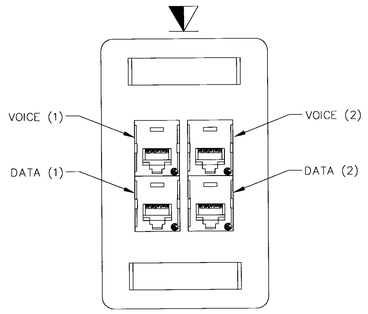

(2) CATEGORY 6 CABLES FOR DATA, (2) CATEGORY 6 CABLES FOR VOICE, (2) CATEGORY 6 JACKS FOR DATA, (2) CATEGORY 6 JACKS FOR VOICE AND (1) 4-PORT FACEPLATE

VOICE/DATA OUTLET — SCALE: NTS — 4 / --

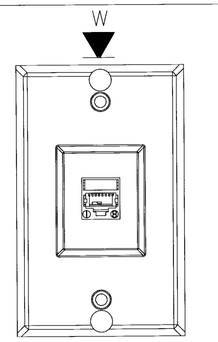

(1) CATEGORY 6 CABLE, (1) CATEGORY 6 JACK AND (1) 1-PORT WALL PHONE FACEPLATE

WALL TELEPHONE OUTLET — SCALE: NTS — 3 / --

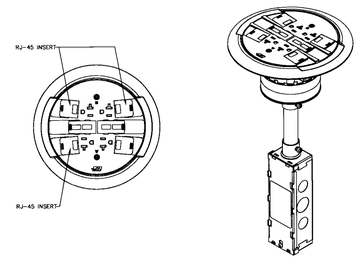

FLOOR OUTLET - WIREMOLD RC4

FLUSH FLOOR OUTLET — SCALE: NTS — 2 / --

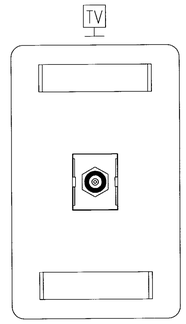

(1) RG-6 COAXIAL CABLE FOR CATV, (1) F-CONNECTOR FOR CATV AND (1) SINGLE PORT FACEPLATE

CATV OUTLET — SCALE: NTS — 1 / --

SCALE: NTS — 10 / --

SCALE: NTS — 9 / --

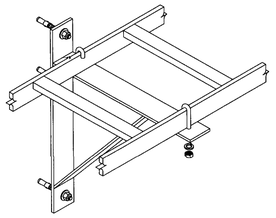

TRIANGULAR WALL SUPPORT BRACKET — SCALE: NTS — 8 / --

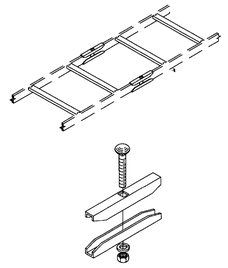

RUNWAY BUTT SPLICE — SCALE: NTS — 7 / --

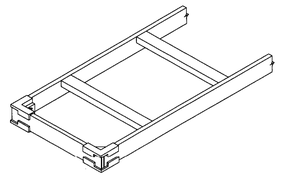

RUNWAY END CLOSING KIT — SCALE: NTS — 6 / --

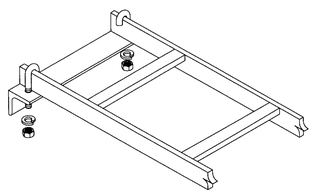

RUNWAY WALL ANGLE SUPPORT — SCALE: NTS — 15 / --

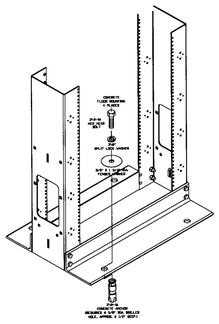

RACK-TO-FLOOR INSTALLATION — SCALE: NTS — 14 / --

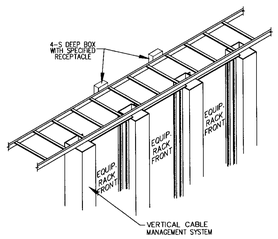

POWER OUTLET MOUNTING TO RUNWAY — SCALE: NTS — 13 / --

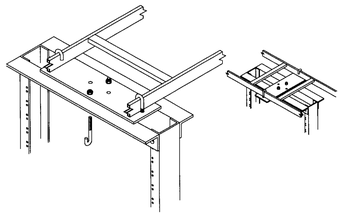

RACK-TO-RUNWAY INSTALLATION — SCALE: NTS — 12 / --

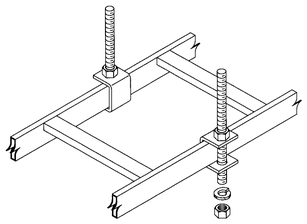

RUNWAY SUPPORT KIT — SCALE: NTS — 11 / --

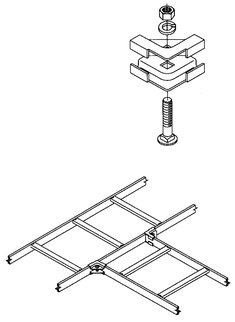

HORIZONTAL RUNWAY JUNCTION SPLICE — SCALE: NTS — 20 / --

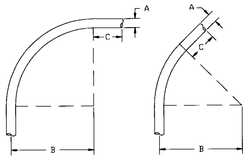

	A	B	C
SIZE	O.D.	MIN.	MIN.
2"	2.375	21"	3-1/2"
3"	3.500	31"	3-1/4"
4"	4.500	40"	3"

REF: EIA/TIA 569 TABLE 5.2-1

TYP. CONDUIT BEND RADIUS DETAIL — SCALE: NTS — 19 / --

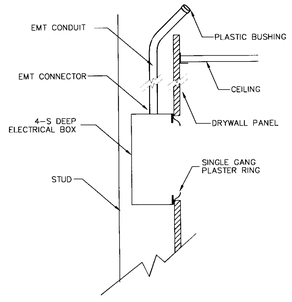

TYPICAL CONDUIT STUB DETAIL — SCALE: NTS — 18 / --

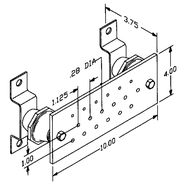

TELECOMM GROUND BUSS BAR "TGB" — SCALE: NTS — 17 / --

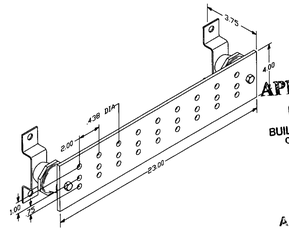

APPROVED
MAY 0 1 2006
BUILDING & SAFETY
CITY OF FONTANA

APPROVED
REVIEWED BY

MAIN TELECOMM GROUND BUSS BAR — SCALE: NTS — 16 / --

LANGDON WILSON
ARCHITECTURE
PLANNING
INTERIORS

18800 VON KARMAN AVENUE, SUITE 200
IRVINE, CALIFORNIA 92612-1517
949 - 833 - 9193

STRUCTURAL
KPFF 949 - 252 - 1022
MECHANICAL
TKSC 949 - 756 - 0565
ELECTRICAL
GLP 714 - 751 - 1851
LANDSCAPE
FRANK RADMACHER 714 - 832 - 1774
CIVIL ENGINEER
IKE CONSULTING 714 - 241 - 0606
AUDIO / VISUAL
VENEKLASEN ASSOCIATES 310 - 450 - 1733
DATA TELEPHONE
PLANNET CONSULTING 714 - 982 - 5800

CITY OF FONTANA
DEVELOPMENT SERVICES
ORGANIZATION BUILDING
8353 SIERRA AVENUE FONTANA, CALIFORNIA

REV.	DATE	ISSUED FOR	REV.	DATE	ISSUED FOR
	4.17.06	PERMIT SET			
	4.17.06	BID SET			

Stamp

DATE: SCALE: AS NOTED
DRAWN BY:
JOB NO. L454-000 CADD TITLE:F401

SHEET TITLE:
TELECOMMUNICATIONS DETAILS

SHEET NUMBER:
T401

© Copyright 2005 Langdon Wilson

PLAN CHECK #2 RESUBMITTAL 03-13-06

DEVELOPMENT SERVICES ORGANIZATION BUILDING
CITY OF FONTANA
FONTANA, CA

GENERAL NOTES

REFER TO SPECIFICATIONS FOR COMPLETE REQUIREMENTS.

1. ELECTRICAL:
   - A. ALL CONDUIT, JUNCTION BOXES, FACILITY PANELS, BACK BOXES, CABLE TRAYS, PULL STRING AND POWER OUTLETS BY ELECTRICAL CONTRACTOR.
   - B. ALL POWER TO AV EQUIPMENT TO ORIGINATE FROM DEDICATED AUDIO VIDEO LOAD CENTER IN ACCORDANCE WITH THE LATEST LOCAL AND NATIONAL CODES REFERENCING "AUDIO SIGNAL PROCESSING, AMPLIFICATION AND REPRODUCTION EQUIPMENT."
   - C. PROVIDE ALL AV CIRCUITS WITH ISOLATED GROUND, DEDICATED NEUTRAL.
2. COORDINATE:
   - A. COORDINATE WITH THE WORK OF ALL SECTIONS. COORDINATE THE LOCATION OF BLOCKING AND BACKING REQUIRED BY THIS SECTION. MAKE REASONABLE MINOR ADJUSTMENTS TO PRESERVE ARCHITECTURAL SYMMETRY AND ALIGNMENT WITH ADJACENT FEATURES AT NO CLAIM FOR ADDITIONAL COST OR TIME. PRESENT CONFLICTS IN TIMELY MANNER FOR RESOLUTION.
   - B. RELOCATION, REVISION OR CORRECTION CAUSED BY FAILURE OF THE CONTRACTOR TO COORDINATE THE WORK SHALL NOT BE SUBJECT TO CLAIM FOR ADDITIONAL COST OR TIME.
   - C. POWER RECEPTACLES SHOWN ON THE AV DRAWINGS OUTSIDE OF EQUIPMENT RACKS ARE SHOWN FOR COORDINATION INFORMATION ONLY. REFER TO DIVISION 16 DOCUMENTS FOR CONSTRUCTION.
   - D. THESE DRAWINGS SHOW SCOPE. THE EXACT LOCATION & ELEVATIONS OF LOUDSPEAKERS, RECEPTACLES AND DEVICES MUST BE COORDINATED WITH THE ARCHITECTURAL DRAWINGS.
   - E. CONDUIT, BACK BOXES AND PULL BOXES SUPPLIED AND INSTALLED BY ELECTRICAL CONTRACTOR UNDER SUPERVISION OF AV CONTRACTOR
   - F. GENERAL CONTRACTOR SHALL COORDINATE THE CONDUIT, DEVICES, PATHWAYS AND JUNCTION BOXES FOR THE AV SYSTEM WITH OTHER TRADE TO AVOID ANY CONFLICTS.
3. LOCATIONS AND DIMENSIONS:
   - A. LOCATIONS AND DIMENSIONS SHOWN ON ARCHITECTURAL DRAWINGS TAKE PRECEDENCE OVER THESE AV DRAWINGS. IN CASE OF APPARENT CONFLICT OR AMBIGUITY, SUBMIT TO THE ARCHITECT IN TIMELY MANNER FOR RESOLUTION.
   - B. DIMENSIONS TAKE PRECEDENCE OVER SCALE. LARGE SCALE DRAWINGS TAKE PRECEDENCE OVER SMALL. REPORT ALL CONFLICTS BEFORE INSTALLATION.
   - C. UNLESS OTHERWISE NOTED, DIMENSIONS ARE SHOWN HEIGHT X WIDTH X DEPTH.
   - D. VERIFY ALL DIMENSIONS, LOCATIONS AND CONDITIONS IN THE FIELD PRIOR TO STARTING WORK. NOTIFY ARCHITECT OF ANY APPARENT DISCREPANCIES.
4. SUPPORT:
   PROVIDE ALL BLOCKING, BRIDGING, TIES, FASTENERS AND RELATED SUPPORT PROVISIONS FOR ALL WORK OF THIS SECTION. COMPLY WITH APPLICABLE CODE REQUIREMENTS FOR MEANS OF SUPPORT OF ELECTRICAL EQUIPMENT OF THE SAME WEIGHT UNDER THE SAME MOUNTING CONDITIONS. DO NOT APPLY ANY LOAD TO BUILDING STRUCTURE WITHOUT FIRST OBTAINING WRITTEN APPROVAL OF THE PROJECT STRUCTURAL ENGINEER. OBTAIN PER PROJECT PROCEDURES.
5. BOX, PANEL, AND ENCLOSURE INSTALLATION:
   - A. COORDINATE THE LOCATION OF ALL BOXES, PANELS, ENCLOSURES AND RELATED RACEWAY WITH THE WORK OF OTHER SECTIONS.
   - B. VERIFY ACCESS TO BOXES, PANELS AND ENCLOSURES COMPLIES WITH APPLICABLE CODE.
   - C. COORDINATE AND CORRECT ALL CONDITIONS OF OCCLUSION OF ALL LOUDSPEAKER ASSEMBLIES. WHERE MORE THAN ON (1) FLUSH MOUNTED CEILING LOUDSPEAKER HAS BEEN SCHEDULED, NONE SHALL BE LOCATED CLOSER TO ANY FIXED WALL THAN ONE-HALF (½) OF THE ADJACENT CLEAR HEIGHT, EXCEPT AT CEILING DISCONTINUITIES, OR WHERE SPECIFICALLY SHOWN ON THE DRAWINGS.
   - D. INSTALL BOXES, PANELS, AND ENCLOSURES SQUARE AND PLUMB. SET FLUSH MOUNTED UNITS SO THAT THE FACE OF THE COVER, BEZEL, OR ESCUTCHEON, IS IN THE SAME PLANE AS THE SURROUNDING FINISHED SURFACE. MOUNT BOXES, PANELS, AND TRIM SO THAT THERE ARE NO GAPS, CRACKS, OR OBVIOUS LINES BETWEEN THE TRIM AND THE ADJACENT FINISHED SURFACE.
   - E. UNLESS OTHERWISE NOTED, PROVIDE STEEL BOXES, PANELS AND ENCLOSURES. COMPLY WITH DIVISION 16 REQUIREMENTS AND APPLICABLE CODE.
   - F. UNLESS OTHERWISE NOTED, BOXES AND ENCLOSURES SHALL BE NOT LESS THAN 2-1/8 INCHES DEEP. PROVIDE THE LARGER OF THE SIZE REQUIRED BY APPLICABLE CODE OR AS SHOWN ON DRAWINGS. COORDINATE WIRE AND CABLE BEND RADIUS WITH BOX AND ENCLOSURE SIZE.
   - G. PULL BOXES: PROVIDE AS REQUIRED BY THE MOST RESTRICTIVE OF APPLICABLCODE OR THE PROVISIONS OF DIVISION 16. COORDINATE WITH WIRE AND CABLE BEND RADIUS.
6. RACEWAY:
   - A. RACEWAY FOR ALL WORK IN THIS SECTION SHALL BE EMT.
   - B. RACEWAY SHALL BE 3/4 INCH DIAMETER TRADE SIZE UNLESS OTHERWISE NOTED.
   - C. CONDUIT WITH FIBER OPTIC CABLE INSTALLED, MUST CONFORM TO THE MINIMUM BEND RADIUS AS SPECIFIED BY THE MANUFACTURER OF THE CABLE. GENERAL CONTRACTOR IS TO APPLY RADIUS BENDS WHERE NEEDED. FIBER BEND RADIUS SHALL BE A MINIMUM LONG-TERM LOW-STRESS RADIUS NOT LESS THAN 20 TIMES THE CABLE DIAMETER.
   - D. KEEP A MINIMUM OF 12" CLEAR BETWEEN ELECTRICAL CONDUIT AND LOW VOLTAGE CONDUIT.
7. GROUNDING AND BONDING:
   COMPLY WITH ALL APPLICABLE CODES AND ORDINANCES. REFER TO NATIONAL ELECTRICAL CODE SECTION 250-.
   - A. BOND RACEWAY AND RELATED BOXES, PANELS, ENCLOSURES AND CABINETS AS REQUIRED BY APPLICABLE CODE AND DIVISION 16.
   - B. MAKE RACEWAY CONNECTIONS TO EQUIPMENT RACKS AND SIMILAR EQUIPMENT ENCLOSURES CONTAINING POWERED EQUIPMENT WITH ISOLATED FITTINGS.
   - C. GROUND AND BOND EQUIPMENT RACKS AND SIMILAR EQUIPMENT ENCLOSURES CONTAINING POWERED EQUIPMENT EXCLUSIVELY VIA THE ISOLATED EQUIPMENT GROUNDING CONDUCTORS PROVIDED UNDER DIVISION 16. SIZE SUCH CONDUCTORS ACCORDING TO APPLICABLE CODE. FOR EACH TECHNICAL BRANCH CIRCUIT, THE ISOLATED EQUIPMENT GROUNDING CONDUCTOR SHALL BE COPPER OF THE SAME GAUGE AS SUPPLY AND NEUTRAL CONDUCTORS. MAIN ISOLATED EQUIPMENT GROUNDING CONDUCTOR TO EACH ENSEMBLE OF EQUIPMENT RACKS SHALL BE COPPER, THE LARGER OF #4 AWG OR AS REQUIRED BY APPLICABLE CODE.
   - D. D.C. RESISTANCE BETWEEN THE ISOLATED EQUIPMENT GROUNDING BUS AT EQUIPMENT ROOM TECHNICAL POWER PANELS AND THE MAIN PROJECT GROUND FIELD SHALL NOT EXCEED 0.15 OHMS.
   - E. FOR COMMUNITY ANTENNA TELEVISION AND MASTER ANTENNA TELEVISION SYSTEMS AND RELATED PROVISIONS, COMPLY WITH ARTICLE 800, NATIONAL ELECTRICAL CODE.
8. CABLE AND WIRE:
   - A. ALL CABLE AND WIRE BY AUDIO VISUAL CONTRACTOR.
   - B. USE PLENUM RATED WIRE WHERE REQUIRED BY CODE.
   - C. ALL WIRE DISTRIBUTION TO EQUIPMENT RACK TO BE PLENUM RATED.
9. GENERAL:
   - A. IN THE EVENT THAT THESE PLANS, NOTES OR DETAILS OR ANY PART OR PORTION THEREOF ARE USED BY ANY THIRD-PARTY WITHOUT THE EXPRESS AUTHORIZED PERMISSION OF VENEKLASEN ASSOCIATES, THE UNAUTHORIZED USER AND ANYONE BENEFITING THEREFROM, SHALL DEFEND, INDEMNIFY AND HOLD HARMLESS VENEKLASEN ASSOCIATES AND ITS AGENTS, PRINCIPALS, EMPLOYEES AND CONSULTANTS FROM AND AGAINST ANY AND ALL CLAIMS, INCLUDING ATTORNEYS' FEES ARISING OUT OF SAID UNAUTHORIZED USE.
   - B. FURTHERMORE, THE UNAUTHORIZED USE OF THESE PLANS, NOTES, DETAILS OR ANY PART OR PORTION THEREFORE IS EXPRESSLY PROHIBITED AND VENEKLASEN ASSOCIATES RETAINS A COPYRIGHT OVER ANY AND ALL DOCUMENTS PREPARED BY VENEKLASEN ASSOCIATES.
   - C. IN THE EVENT THAT THE INSTALLER DEVIATES FROM THE PLANS AND SPECIFICATIONS PREPARED BY VENEKLASEN ASSOCIATES WHICH RESULTS IN DAMAGE TO PERSONS OR PROPERTY OF ANY KIND, INSTALLER HEREBY AGREES TO DEFEND, INDEMNIFY AND HOLD HARMLESS VENEKLASEN ASSOCIATES, ITS AGENTS, PRINCIPALS, EMPLOYEES AND CONSULTANTS FROM AND AGAINST ANY AND ALL CLAIMS, INCLUDING ATTORNEYS' FEES CAUSED BY SUCH FAILURE TO FOLLOW THE PLANS AND SPECIFICATIONS PREPARED BY VENEKLASEN ASSOCIATES, EXCEPTING ONLY THE DAMAGES TO PERSONS OR PROPERTY WHICH ARE CAUSED BY THE SOLE NEGLIGENCE OR WILLFUL MISCONDUCT OF VENEKLASEN ASSOCIATES.
   - D. DRAWINGS ARE DIAGRAMMATIC AND ARE INTENDED TO CONVEY SCOPE OF WORK AND TO INDICATE GENERAL ARRANGEMENT. THEY ARE NOT INTENDED TO SHOW EVERY DETAIL INCLUDING OFFSET OR FITTING OR EVERY STRUCTURAL DIFFICULTY THAT MAY BE ENCOUNTERED DURING THE WORK. EXCEPT AS OTHERWISE INDICATED, LOCATIONS OF ITEMS ARE APPROXIMATE ONLY. EXACT LOCATIONS NECESSARY TO SECURE PROPER CONDITIONS AND RESULTS MUST BE DETERMINED AT PROJECT SITE AND MUST BE APPROVED BY THE OWNER'S REPRESENTATIVE.
   - E. EXCEPT AS OTHERWISE INDICATED, MAKE REASONABLE MODIFICATIONS IN LAYOUT AS NEEDED TO PREVENT CONFLICT WITH OTHER WORK OR PROPER EXECUTION OF WORK.
   - F. INCLUDE WORK NOT USUALLY SHOWN OR SPECIFIED, BUT NECESSARY FOR PROPER INSTALLATION AND OPERATION OF A SYSTEM OR PIECE OF EQUIPMENT IN WORK.

BOX SCHEDULE

NUMBER	DESCRIPTION	BOX TYPE	SIZE	INSTALL METHOD	ELEVATION
AV1	FLOOR BOX (BY ELECTRICAL CONTRACTOR)	FSR-INC FL-600P	13.5 x 12 x 6	FLOOR	
AV2	FLOOR BOX (BY ELECTRICAL CONTRACTOR)	FSR-INC FL-500P	10 x 12 x 6	FLOOR	
AV3	WALL BOX	4 GANG SWITCH BOX DEEP	7-13/32 x 3-3/4 x 2-1/2	WALL	PSRH
J#	IN WALL JUNCTION BOX	8X8X4 NEMA-1	8 x 8 x 4	WALL	PSRH
SIW1	IN WALL SPEAKER			WALL	+6'-8" AFF.
VD1	VIDEO DISPLAY JUNCTION BOX	4 SQ. BOX DEEP W/2GMR	4 x 4 x 2-1/8	WALL	SEE DRAWINGS
VPJ	VIDEO PROJECTOR JUNCTION BOX	4 GANG SWITCH BOX DEEP	7-13/32 x 3-3/4 x 2-1/2	CEILING	ABOVE FINISHED CEILING

SHEET INDEX

SHEET	DESCRIPTION	INFRASTRUCTURE SUBMITTAL 12-02-05	100% CD SUBMITTAL 03-24-06	100% CD RE-SUBMITTAL 04-17-06
AV001	GENERAL NOTES, BOX SCHEDULE AND SHEET INDEX	X	X	X
AV002	ABBREVIATIONS, NOTES AND SYMBOLS	X	X	X
AV101	AV GROUND FLOOR PLAN	X	X	X
AV102	AV SECOND FLOOR PLAN	X	X	X
AV201	AV GROUND FLOOR REFLECTIVE CEILING PLAN	X	X	X
AV202	AV SECOND FLOOR REFLECTIVE CEILING PLAN	X	X	X
AV271	AV GROUND FLOOR ELEVATIONS		X	X
AV272	AV SECOND FLOOR ELEVATION		X	X
AV300	WIRING SCHEMES & SYMBOLS		X	X
AV301	AV ONELINE DIAGRAM		X	X
AV302	AV ONELINE DIAGRAM		X	X
AV303	AV ONELINE DIAGRAM		X	X
AV451	TYPICAL CREDENZA LAYOUT		X	X
AV501	EQUIPMENT RACK ELEVATION		X	X
AV650	PANEL CONNECTOR KEY		X	X
AV651	PANEL LAYOUTS		X	X

APPROVED
MAY 0 1 2006
BUILDING & SAFETY
CITY OF FONTANA

APPROVED
REVIEWED BY ______ DATE
Approved of these plans shall not be construed to be a permit for, or an approval of any violation of any of the provisions of the state or local laws. One set of approved plans must be kept on the job until completion.

LANGDON WILSON
ARCHITECTURE
PLANNING
INTERIORS

18800 VON KARMAN AVENUE, SUITE 200
IRVINE, CALIFORNIA 92612-1517
949 - 833 - 9193

STRUCTURAL
KPFF 949 - 252 - 1022
MECHANICAL
TKSC 949 - 756 - 0565
ELECTRICAL
GLP 714 - 751 - 1851
LANDSCAPE
FRANK RADMACHER 714 - 832 - 1774
CIVIL ENGINEER
IKE CONSULTING 714 - 241 - 0606
AUDIO / VISUAL
VENEKLASEN ASSOCIATES 310 - 450 - 1733
DATA TELEPHONE
PLANNET CONSULTING 714 - 982 - 5800

CITY OF FONTANA
DEVELOPMENT SERVICES
ORGANIZATION BUILDING
8353 SIERRA AVENUE FONTANA, CALIFORNIA

REV.	DATE	ISSUED FOR	REV.	DATE	ISSUED FOR
	08-12-05	SCHEMATICS			
	10-17-05	DD PACKAGE			

Stamp

DATE: 8-12-05 SCALE: NTS
DRAWN BY:
JOB NO. 2388-091-000 CADD TITLE: AV001

SHEET TITLE:
GENERAL NOTES
& BOX SCHEDULE

SHEET NUMBER:
AV001

©Copyright 2005 Langdon Wilson

BID SET 04-17-06

DEVICE / BOX ID

1GMR	1 Gang Mud Ring	EDB	Electrical Distribution Box	MSP	Microphone Splitter	SPJ	Slide Projector
2GMR	2 Gang Mud Ring	EFX	Effects Processor	MSR	Microphone Splitter Rack	SPN	Stage Panel
3GMR	3 Gang Mud Ring	EN	Ethernet	MSV	Media Server	SPP	Speaker Patch Panel
4GMR	4 Gang Mud Ring	ENC	Encoder	MSW	Multi-Media Switcher	SPR	Speaker Processor
		ENG	Electronic News Gathering	MTX	Switching Matrix	SPT	Speaker Portable
A	Audio	EQ	Equalizer	MXP	Mixer Pre-Amplifier	SRA	Stereo Receiver Amp
ABA	Audio Buffer Amplifier	ERK	Equipment Rack			SS	Selector Switch
AC	Audio Combiner	EXG	Expander/Gate	NADU	Network Audio Distribution Amp	SSA	Solid State Audio Source
ACN	Audio Control Network	EXT	Extender	NET	Network Outlet	SSF	Sliding Shelf
ACS	Audio Conferencing System			NHB	Network Hub	SSS	Surround Sound Speaker
ADA	Audio Distribution Amplifier	F	Fiber	NI	Network Interface	SSW	Serve Switch
ADB	Audio Distribution Box	FB	Floor Box	NMCPU	Network Manager CPU	STD	Standard
ADI	Analog to Digital Input	FBS	Feed Back Suppresser	NSG	Noise Gate	STU	Satellite Tuner
ADK	Audio Ducker	FLM	Floor Monitor	NSS	Network Source Switch	SUM	Summing Amplifier
AFT	AM/FM Tuner	FMA	FM Antenna	NT	Network Terminator	SV	S-Video
AIP	Audio Input Panel	FMR	FM Receiver	NWS	Network Switch	SVC	Slide to Video Converter
AL	Audio Left	FMT	FM Tuner			SVDA	S-Video Distribution Amp
ALA	Assistive Listening Antenna	FMTA	FM Transmitting Antenna	OPJ	Optical Projector	SVHS	S-Video Cassette Recorder
ALR	Assistive Listening Receiver	FMTR	FM Transmitter			SVMS	S-Video Matrix Switcher
ALT	Assistive Listening Transmitter	FOH	Front Of House	P	Power	SVS	S-Video Switcher
AM	Audio Mono	FP	Facility Panel	PA	Power Amplifier	SVSS	S-Video Separator Switcher
AMS	Audio Monitor Speaker	FPL	Floor Panel	PAD	Pad	SW	Wall Mounted Speaker
AMX	Auto Mixer	FT	Fiber Tie Line	PB	Push Button	SWH	Sound Web Hub
ANT	Antenna	FW	Firewire	PBC	Push Button Control	SYSW	System Switcher
AOB	Analog Output Bridge			PBR	Play Back Rack		
AOP	Audio Output Panel	GEQ	Graphic Equalizer	PC	Power Conditioner	TAM	Telephone Access Module
APB	Audio Patch Bay	GNM	Gooseneck Microphone	PCC	Personal Computer Control	TB	Terminal Box
APD	Antenna Power Distribution			PCLD	Projector Controller With Line Doubler	TBC	Time Base Corrector
APM	Audio Program Monitor	HS	Headset	PD	Plasma Display	TCR	Transcoder
AR	Audio Right	HDTV	High Definition Television	PDL	Plasma Display Lift	TCS	Teleconferencing System
ASV	Audio Server	HDW	Hardware	PEQ	Parametric Equalizer	TD	Touch Display
ASW	Audio Switcher	HFS	High Frequency Speaker	PGM	Program Monitor	TDC	Touch Display Control
AT	Audio Tie Line	HHM	Hand Held Microphone	PJL	Projector Lift	TEL	Telephone Output
ATI	Audio Teleconference Interface	HRB	Headset Remote Box	PJS	Projection Screen	TI	Telephone Interface
ATN	Attenuator			PM	Paging Microphone	TM	Table Microphone
AV	Audio Video	IAA	Integrated Audio Amplifier	PMP	Podium Microphone Panel	TMB	Table Microphone Box
AVC	Audio Video Controller	IBP	Intercom Belt Pack	PNWS	Power Network Switch.	TP	Touch Panel
AVD	Audio Video Distribution	IC	Intercom	POD	Podium	TS	Touch Screen
AVN	Audio Video Network	ICM	Intercom Main Station	PP	Podium Panel	TT	Turn Table
AVP	Audio Video Panel	ICS	Intercom Station	PPS	Phantom Power Supply	TTP	Table Top Panel
AVR	Audio Video Router	ID	Interactive Display	PRE	Pre Amplifier	TV	Television
AXF	Auto Transformer	IHS	Intercom Head Set	PRK	Portable Rack	TVT	TV/RF Tuner
		IOP	Input/Output Panel	PS	Power Supply		
BC	Battery Charge	IR	Infrared	PSC	Projection Screen Control	UBC	Unbalance to Balance Converter
BOB	Break Out Box	IRB	IR Broadcast	PSD	Paging Station Desk Mount	UC	Up Converter
BP	Battery Pack	IRE	IR Emitter	PSLR	Program Select & Level Remote	UPS	Uninterruptible Power Supply
		IRM	IR Modulator	PSR	Paging Station Rack Mount	USB	Universal Serial Bus
C	Conduit	IRR	IR Repeater	PSW	Paging Station Wall Mount		
CAM	Video Camera	IRT	IR Transmitter	PTC	Programmable Time Clock	V	Video
CAS	Cassette Deck	ISDN	Integrated Service Digital Network	PVM	Preview Video Monitor	VC/SS	Volume Control / Selector Switch
CASR	Cassette Deck Recorder	ITR	Isolation Transformer	PWR	Power	VCA	Voltage Controlled Amplifier
CATV	Community Antenna Television			PWS	Power Strip	VCC	Video Conference Camera
CBT	Cable Tray	J	Junction Box	PXS	Proximity Switch	VCR	Video Cassette Recorder
CC	Contact Closure			PZM	Pressure Zone Microphone	VCU	Video Conferencing Unit
CCC	Contact Closure Card	KB	Keyboard			VD	Video Display
CCD	CD/Cassette Deck	KM	Keyboard & Mouse	RAS	RGB Auto Switcher	VDA	Video Distribution Amplifier
CCF	Card Cage Frame	KMI	Keyboard & Mouse Interface	RC	Remote Control	VE	Video Encoder
CCU	Camera Control Unit	KMK	Keyboard & Mouse Kit	RDA	RGB Distribution Amp	VEH	Video Encoder Hub
CDB	Crestron Distribution Block	KVM	Keyboard, Video & Mouse	REC	Recorded	VFX	Video Effects Processor
CDP	Compact Disc Player	KVME	Keyboard, Video & Mouse Extender	REV	Reverb	VIP	Video Input Panel
CIU	Computer Interface Unit			RF	Radio Frequency	VL	Voice Lift
CM	Ceiling Microphone	LAN	Local Area Network	RFA	RF Amplifier	VLCF	Voice Lift Card Cage Frame
CN	CobraNet	LD	Line Doubler	RFAS	RF Antenna Splitter	VM	Video Monitor
CNT	Control Network	LDP	Laser Disc Player	RFDA	RF Distribution Amplifier	VMS	Video Matrix Switcher
CON	Converter	LDR	Line Driver	RFS	RF Splitter	VOL	Volume Control
CPL	Compressor/Limiter	LEC	Lectern	RFT	RF Transmitter	VPB	Video Patch Bay
CPP	Central Paging Processor	LED	Light Emitting Panel	RFTA	RF Transmitting Antenna	VPJ	Video Projector
CPU	Central Processing Unit	LFS	Low Frequency Speaker	RGB	RGBHV	VPM	Video Program Monitor
CSF	Call Signal Flasher	LM	Line Module	RIP	Rack Input Panel	VSC	Video Scan Converter
CT	Control	LP	Lectern Panel	RK	Rack Lights	VSPC	Video Screen Panel Control
CTS	Computer Training System	LPT	Laptop	RMS	RGB Matrix Switcher	VS	Video System Switcher
COD	Codec Unit	LTF	Line Transformer	RPN	Rack Panel	VSW	Video Switcher
CVM	Computer Video Monitor	LTP	LCD Touch Panel	RSC	RGB System Controller	VT	Video Tie Line
				RSI	RGB Switching Interface		
DA	Distribution Amp	M	Microphone	RSRS	Rotating Sliding Rail System	WAD	Wireless Antenna Distribution
DAB	Digital Audio Bus	MA	Mixer Amplifier	RSW	RGB Switcher	WBC	Window Blind Control
DAO	Digital to Analog Output	MATV	Master Antenna Television			WER	Wireless Ethernet Router
DAS	Digital Audio Source	MCS	Main Control System	S	Speaker Level	WGW	Wireless Gateway
DAT	Digital Audio Tape Unit	MCT	Media Cabler Tray	SAT	Satellite	WLM	Wireless Microphone
DC	Document Camera	MCV	Media Converter	SB	Bass Speaker	WLU	Wireless Unit
DCA	Digital Controlled Amplifier	MD	Mini Disc	SC	Ceiling Speaker	WM	Wireless Mouse
DCC	Data Control Card	MDCF	Matrix Digital Card Frame	SCB	Cinema Speaker Bass	WMA	Wireless Mic Antenna
DCM	Digital Cart Machine	MFP	Microphone Facility Panel	SCD	Speaker Control Distribution	WMAP	Wireless Mic Antenna Panel
DCN	Divider Combiner Network	MFS	Mid Frequency Speaker	SCN	Cinema Speaker	WMG	Wire Manager
DCPU	Digital Central Processing Unit	MI	Midi Interface	SCP	System Control Pad	WMKA	Wireless Mic Keyboard Antenna
DDC	Digital Document Camera	MIDI	MIDI	SDB	Speaker Distribution Box	WMKS	Wireless Mouse Keyboard Antenna
DDL	Digital Delay	MIX	Mixer	SER	Serial	WMR	Wireless Mic Receiver
DEC	Decoder	MKB	Monitor Keyboard Sliding Shelf	SFF	Front Fill Speaker	WPN	Wall Panel
DEQ	Dynamic Equalizer	MM	Microphone Module	SG	Grade Speaker	WSI	Work Station Interface
DJCC	Digital Joystick Camera Control	MMC	Media Matrix Computer	SH	Horn Speaker	WTA	Wireless Touch Panel Adapter
DIU	Digital Interface Unit	MMP	Monitor Mix Panel	SIS	Set Integrated Speaker	WTP	Wireless Touch Panel
DM	Digital Mixer	MMPA	Measurement Mix Pre Amplifier	SIW	In-Wall Speaker	WTPR	Wireless Touch Panel Receiver
DMX	DMX	MOD	Modulator	SJB	Speaker Junction Box	WTR	Wireless Transmitter Receiver
DREC	Digital Recorder	MOU	Mouse	SLA	Speaker Line Array		
DRC	Door Control	MP	Media Panel	SMP	Stage Manager Panel	XFR	Transformer
DSP	Digital Signal Processor	MPA	Microphone Pre-Amplifier	SMS	Scaling Matrix Switcher	XKVM	Extended KVM
DSS	Digital Satellite System	MPN	Monitor Panel	SMX	Splitter Mixer	XLRP	XLR Panel
DVD	Digital Versatile Device	MPS	Motorized Projection Screen	SP	Speaker	XOV	Crossover
DVHS	Digital Cassette Recorder	MRP	MD Recorder Player	SPCL	Speaker Cluster		
DVP	Digital Video Processor	MSC	Main System Controller	SPG	Program Speaker	YCVS	YC & V Switcher
DVS	Digital Video Scaler						

ABBREVIATIONS

A 0	Above Zero Floor Level	(E)###	Existing	LRR	Lightning Room Rack	PROJ	Project
ACT	Above Counter Top	E.C.	Empty Conduit	LTG	Lighting	PSCH	Project Standard Control Height
AFB	Above Floor Below	EC	Electrical Contractor			PSRH	Project Standard Receptacle Height
AFC	Above Finished Ceiling	EL	Elevation	MISC	Miscellaneous	PSSWH	Project Standard Switch Height
AFF	Above Finished Floor	ELEC	Electrical	MOM	Momentary	PWR	Power
AH	Above Header	EOL	End Of Line	MTD	Mounted		
AS	Above Slab	EQUIP	Equipment	MTL	Metal	RCP	Reflected Ceiling Plan
BFC	Below Finished Ceiling	FAN	Fan Panel	NC	Normally Closed	SECT	Section
BGM	Background Music	FBO	Furnished By Owner	NIC	Not In Contract	SHP	Shielded Pair
BOH	Back Of House	FCA	Finished Ceiling Above	NO	Normally Open	STD	Standard
BTU	British Thermal Units	FIN	Finished	NTS	Not To Scale		
		FOH	Front Of House			TST	Test Set
CAB	Cabinet	FSF	Folding Shelf	OC	On Center	TWP	Twisted Pair
CATV	Cable TV	(F)	Future	OD	Outer Diameter	TYP	Typical
CL	Center Line			OFCI	Owner Furnished Contractor Installed		
CLG	Ceiling	GC	General Contractor	OFE	Owner Furnished Equipment	UBC	Uniform Building Code
CM	Construction Manager			OFOI	Owner Furnished Owner Installed	UON	Unless Otherwise Noted
CO	Conduit Only	HR	Home Run				
				PF	Press Feed	VIF	Verify In Field
DIA	Diameter	IW	In Wall	P/O	Part Of		
DR	Door			POC	Point of Connection	WP	Weather Proof
DWR	Drawer	LP	Lightning Protector	PRG	Program		

FACILITY INPUT SYMBOL SCHEDULE AND DESCRIPTIONS

SYMBOL MOUNTING LEGEND

- F — FLOOR MOUNTED
- W — WALL MOUNTED
- C — CEILING MOUNTED
- I — INTERGRATED (MILLWORK, PODIUM, TABLE)
- # — BOX MOUNTED BELOW
- # — BOX MOUNTED ABOVE
- # — EXISTING EQUIPMENT

AV EQUIPMENT RACKS

- SWING OUT RACK
- WALL MOUNTED RACK
- IN-WALL RACK
- FLOOR STANDING RACK

SYMBOL DESCRIPTION

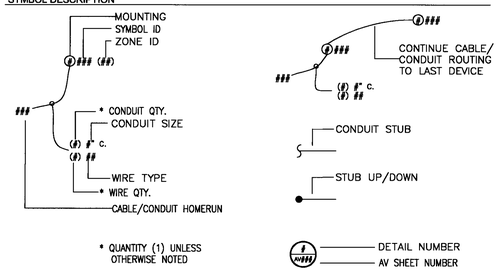

* QUANTITY (1) UNLESS OTHERWISE NOTED

APPROVED
MAY 11 2006
BUILDING & SAFETY
CITY OF FONTANA

REVIEWED BY

Approval of construction is not an approval of any violation of the provisions of building laws. One set of approved plans shall be kept on the job until completion of the work.
WILL DAN

LANGDON WILSON
ARCHITECTURE
PLANNING
INTERIORS

18800 VON KARMAN AVENUE, SUITE 200
IRVINE, CALIFORNIA 92612-1517
949 - 833 - 9193

STRUCTURAL
KPFF 949 - 252 - 1022
MECHANICAL
TKSC 949 - 756 - 0565
ELECTRICAL
GLP 714 - 751 - 1851
LANDSCAPE
FRANK RADMACHER 714 - 832 - 1774
CIVIL ENGINEER
IKE CONSULTING 714 - 241 - 0606
AUDIO / VISUAL
VENEKLASEN ASSOCIATES 310 - 450 - 1733
DATA TELEPHONE
PLANNET CONSULTING 714 - 982 - 5800

CITY OF FONTANA
DEVELOPMENT SERVICES
ORGANIZATION BUILDING
8353 SIERRA AVENUE FONTANA, CALIFORNIA

CITY OF FONTANA CALIFORNIA

REV.	DATE	ISSUED FOR	REV.	DATE	ISSUED FOR
	08-12-05	SCHEMATICS			
	10-17-05	DD PACKAGE			

Stamp

DATE: 8-12-05 SCALE: NTS
DRAWN BY:
JOB NO. 2388-091-000 CADD TITLE AV002

SHEET TITLE
ABBREVIATIONS NOTES & SYMBOLS

SHEET NUMBER:
AV002

©Copyright 2005 Langdon Wilson

BID SET 04-17-06

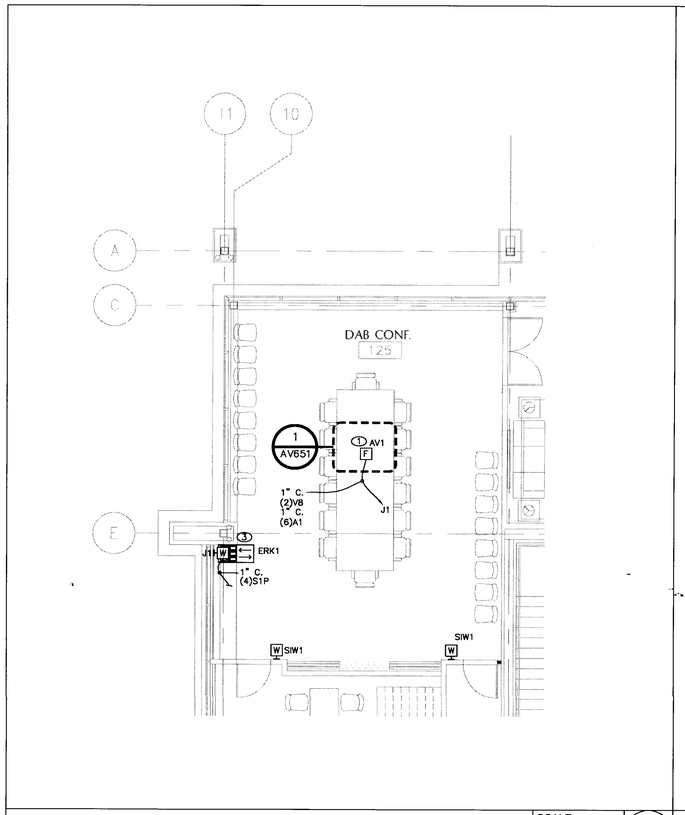

DAB CONFERENCE ROOM #125 - FIRST FLOOR PLAN | SCALE: 3/16" = 1'-0" | 1

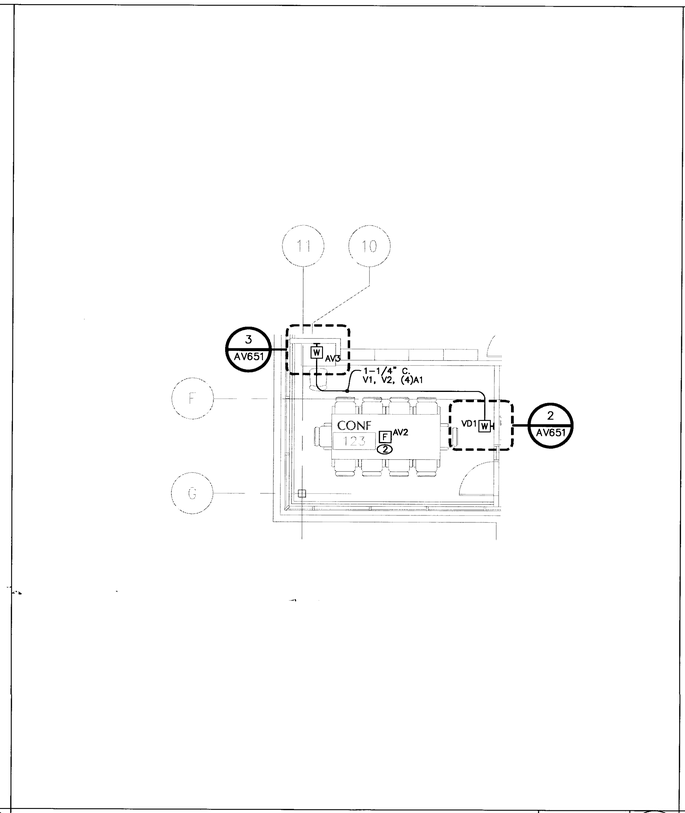

CONFERENCE ROOM #123 - FIRST FLOOR PLAN | SCALE: 3/16" = 1'-0" | 2

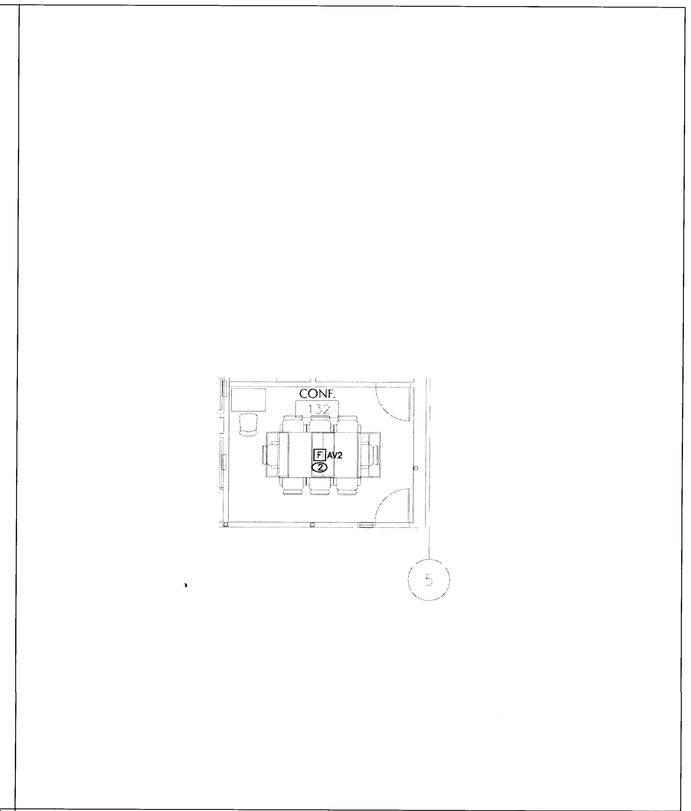

CONFERENCE ROOM #132 - FIRST FLOOR PLAN | SCALE: 3/16" = 1'-0" | 3

NOTES:

1. ALIGN FLOOR BOX "AV1" WITH THE TABLE LEG. PROVIDE AN ACCESS PANEL IN TABLE LEG.
2. FOR USE BY DATA TELEPHONE CONTRACTOR.
3. JUNCTION BOX TO BE PLACED DIRECTLY BEHIND RACK.

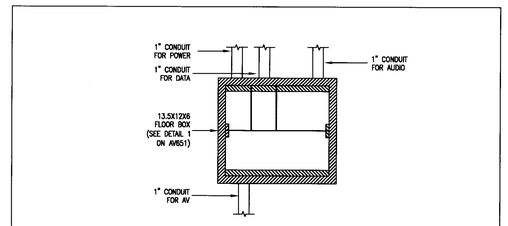

AUDIO VIDEO BOX "AV1" CONDUIT DETAIL | SCALE: NTS | A

WIRE SCHEDULE

TYPE	APPLICATION	DESCRIPTION (FIXED INSTALL CABLE)	O.D.	MANUF.	PART NO.
A1	AUDIO ANALOG/DIGITAL CABLE	ANALOG/DIGITAL AUDIO CABLE, MICROPHONE AND LINE LEVEL WIRING, LESS THAN +24 dBu, FROM 20Hz TO 20kHz, 22 AWG, IMPEDANCE 110Ω ±20%, CAPACITANCE 26pF/FT, 100% SHIELDED, STRANDED TWISTED PAIR	0.177	BELDEN	1800B
C2	CONTROL / PWR SUPPLY	CONTROL CABLE AC/DC - 24 GAGE, 2 PAIR, TWISTED, TINNED COPPER	0.244	BELDEN	9744
D1	DATA SERIAL CABLE RS232-485	SERIAL DATA CABLE, 24 AWG, TINNED COPPER, 100% FOIL, 65% TC BRAID SHIELD, TWISTED 2 PAIR	0.270	BELDEN	8132
D2	CAT 5E DATA NETWORK CABLE	CATEGORY 5E DATA CABLE, 24 AWG, BONDED TWISTED PAIRS, SOLID BARE COPPER, MAX. ATTENUATION 32dB/100m @ 200MHz, MAX DELAY SKEW 510ns/100m, NOM MUTUAL CAPACITANCE @ 1KHz 15pF/FT, MAX DC RESISTANCE 9Ω/100m	0.200	BELDEN	1700A
S1	SPEAKER	LOUDSPEAKER LEVEL OR CIRCUIT WIRING GREATER THAN +24dBu, FROM 20Hz TO 20kHz, 16 AWG, STRANDED, TWISTED PAIR, PLENUM RATED.	0.180	BELDEN	6200UE
V1	VIDEO (ANALOG & DIGITAL)	RG-59, PRECISION VIDEO CABLE, 75Ω, 20AWG, NOM ATTN -13.4dB/100ft @ 3GHz	0.235	BELDEN	1505A
V2	RGBHV CABLE	BNC-5 MINI HIGH RESOLUTION CABLE, 75Ω, 26AWG, NOM ATTN -43.6/100ft @ 3GHz,	0.361	EXTRON	BNC-5 MHR
V8	A/V UTP SKEW FREE CABLE & CONTROL	SKEW FREE: 24AWG, SOLID COPPER TWISTED PAIR, NOM RESISTANCE 28.6Ω/1000FT CAPACITANCE 330 pF/FT, DELAY SKEW 15nS/100m. CONTROL: 22AWG DATA NOM IMPEDANCE 100Ω, 18AWG POWER.	0.216	CRESTRON	CRESTCAT-QM-NP

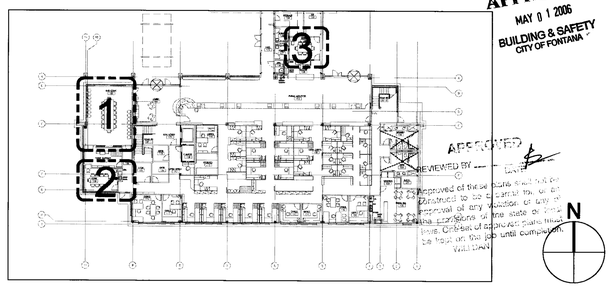

APPROVED
MAY 01 2006
BUILDING & SAFETY
CITY OF FONTANA

APPROVED
REVIEWED BY

LANGDON WILSON
ARCHITECTURE
PLANNING
INTERIORS

18800 VON KARMAN AVENUE, SUITE 200
IRVINE, CALIFORNIA 92612-1517
949 · 833 · 9193

STRUCTURAL
KPFF 949 · 252 · 1022
MECHANICAL
TKSC 949 · 756 · 0565
ELECTRICAL
GLP 714 · 731 · 1851
LANDSCAPE
FRANK RADMACHER 714 · 832 · 1774
CIVIL ENGINEER
IKE CONSULTING 714 · 241 · 0606
AUDIO / VISUAL
VENEKLASEN ASSOCIATES 310 · 450 · 1733
DATA TELEPHONE
PLANNET CONSULTING 714 · 982 · 5800

CITY OF FONTANA
DEVELOPMENT SERVICES ORGANIZATION BUILDING

8353 SIERRA AVENUE FONTANA, CALIFORNIA

CITY OF FONTANA CALIFORNIA

REV.	DATE	ISSUED FOR	REV.	DATE	ISSUED FOR
	08-12-05	SCHEMATICS			
	10-17-05	DD PACKAGE			

Stamp

DATE: 8-12-05 SCALE: 3/16" = 1'-0"
DRAWN BY:
JOB NO. 2388-091-000 CADD TITLE AV101

SHEET TITLE:
AV GROUND FLOOR PLAN

SHEET NUMBER:
AV101

© Copyright 2005 Langdon Wilson

BID SET 04-17-06

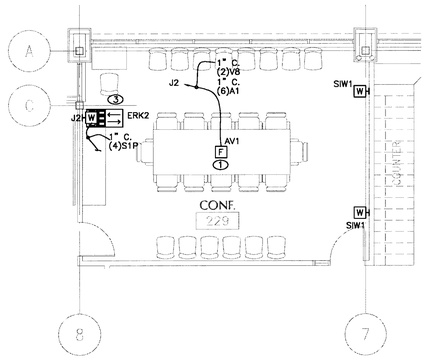

CONFERENCE ROOM #229 - SECOND FLOOR PLAN

SCALE: 3/16" = 1'-0"

1

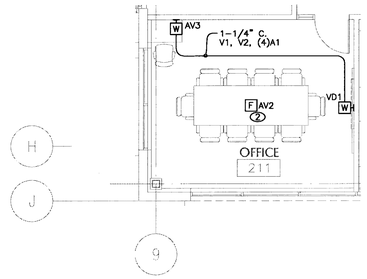

OFFICE #211 - SECOND FLOOR PLAN

SCALE: 3/16" = 1'-0"

2

NOTES:

1. ALIGN FLOOR BOX "AV1" WITH THE TABLE LEG. PROVIDE AN ACCESS PANEL IN TABLE LEG.
2. FOR USE BY DATA TELEPHONE CONTRACTOR.
3. JUNCTION BOX TO BE PLACED DIRECTLY BEHIND RACK.

WIRE SCHEDULE

TYPE	APPLICATION	DESCRIPTION (FIXED INSTALL CABLE)	O.D.	MANUF.	PART NO.
A1	AUDIO ANALOG/DIGITAL CABLE	ANALOG/DIGITAL AUDIO CABLE, MICROPHONE AND LINE LEVEL WIRING, LESS THAN +24 dBu, FROM 20Hz TO 20kHz, 22 AWG, IMPEDANCE 110Ω ±20%, CAPACITANCE 26pF/FT, 100% SHIELDED, STRANDED TWISTED PAIR	0.177	BELDEN	1800B
C2	CONTROL / PWR SUPPLY	CONTROL CABLE AC/DC - 24 GAGE, 2 PAIR, TWISTED, TINNED COPPER	0.244	BELDEN	9744
D1	DATA SERIAL CABLE RS232-485	SERIAL DATA CABLE, 24 AWG, TINNED COPPER, 100% FOIL, 65% TC BRAID SHIELD, TWISTED 2 PAIR	0.270	BELDEN	8132
D2	CAT 5E DATA NETWORK CABLE	CATEGORY 5E DATA CABLE, 24 AWG, BONDED TWISTED PAIRS, SOLID BARE COPPER, MAX. ATTENUATION 32dB/100m @ 200MHz, MAX DELAY SKEW 510ns/100m, NOM MUTUAL CAPACITANCE @ 1KHz 15pF/FT, MAX DC RESISTANCE 9Ω/100m	0.200	BELDEN	1700A
S1	SPEAKER	LOUDSPEAKER LEVEL OR CIRCUIT WIRING GREATER THAN +24dBu, FROM 20Hz TO 20kHz, 16 AWG, STRANDED, TWISTED PAIR, PLENUM RATED.	0.180	BELDEN	6200UE
V1	VIDEO (ANALOG & DIGITAL)	RG-59, PRECISION VIDEO CABLE, 75Ω, 20AWG, NOM ATTN -13.4dB/100ft @ 3GHz	0.235	BELDEN	1505A
V2	RGBHV CABLE	BNC-5 MINI HIGH RESOLUTION CABLE, 75Ω, 26AWG, NOM ATTN -43.6/100ft @ 3GHz,	0.361	EXTRON	BNC-5 MHR
V8	A/V UTP SKEW FREE CABLE & CONTROL	SKEW FREE: 24AWG, SOLID COPPER TWISTED PAIR, NOM RESISTANCE 28.6Ω/1000FT CAPACITANCE 330 pF/FT, DELAY SKEW 15nS/100m. CONTROL: 22AWG DATA NOM IMPEDANCE 100Ω, 18AWG POWER.	0.216	CRESTRON	CRESTCAT-QM-NP

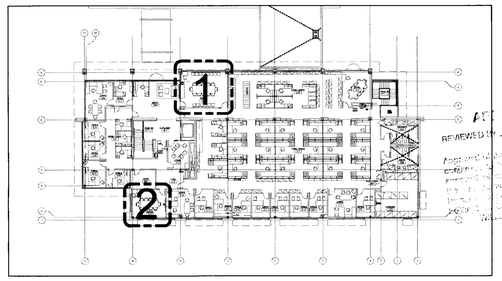

APPROVED
MAY 01 2006
BUILDING & SAFETY
CITY OF FONTANA

LANGDON WILSON
ARCHITECTURE
PLANNING
INTERIORS

18800 VON KARMAN AVENUE, SUITE 200
IRVINE, CALIFORNIA 92612-1517
949 - 833 - 9193

STRUCTURAL
KPFF 949 - 252 - 1022
MECHANICAL
TKSC 949 - 756 - 0565
ELECTRICAL
GLP 714 - 751 - 1851
LANDSCAPE
FRANK RADMACHER 714 - 832 - 1774
CIVIL ENGINEER
IKE CONSULTING 714 - 241 - 0606
AUDIO / VISUAL
VENEKLASEN ASSOCIATES 310 - 450 - 1733
DATA TELEPHONE
PLANNET CONSULTING 714 - 982 - 5800

CITY OF FONTANA
DEVELOPMENT SERVICES
ORGANIZATION BUILDING

8353 SIERRA AVENUE FONTANA, CALIFORNIA

REV.	DATE	ISSUED FOR	REV.	DATE	ISSUED FOR
	08-12-05	SCHEMATICS			
	10-17-05	DD PACKAGE			

Stamp

DATE: 8-12-05 SCALE: 3/16" = 1'-0"

DRAWN BY:

JOB NO. 2388-091-000 CADD TITLE AV102

SHEET TITLE:

AV SECOND FLOOR PLAN

SHEET NUMBER:

AV102

©Copyright 2005 Langdon Wilson

BID SET 04-17-06

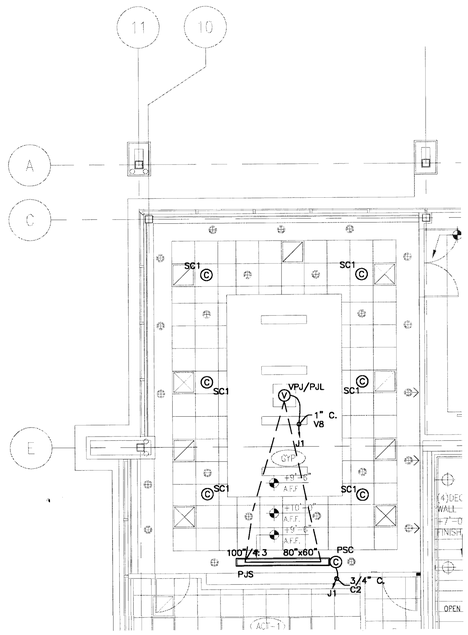

DAB CONFERENCE ROOM #125 - FIRST FLOOR RCP

SCALE: 3/16" = 1'-0"

1

WIRE SCHEDULE

TYPE	APPLICATION	DESCRIPTION (FIXED INSTALL CABLE)	O.D.	MANUF.	PART NO.
A1	AUDIO ANALOG/DIGITAL CABLE	ANALOG/DIGITAL AUDIO CABLE, MICROPHONE AND LINE LEVEL WIRING, LESS THAN +24 dBu, FROM 20Hz TO 20kHz, 22 AWG, IMPEDANCE 110Ω ±20%, CAPACITANCE 26pF/FT, 100% SHIELDED, STRANDED TWISTED PAIR	0.177	BELDEN	1800B
C2	CONTROL / PWR SUPPLY	CONTROL CABLE AC/DC - 24 GAGE, 2 PAIR, TWISTED, TINNED COPPER	0.244	BELDEN	9744
D1	DATA SERIAL CABLE RS232-485	SERIAL DATA CABLE, 24 AWG, TINNED COPPER, 100% FOIL, 65% TC BRAID SHIELD, TWISTED 2 PAIR	0.270	BELDEN	8132
D2	CAT 5E DATA NETWORK CABLE	CATEGORY 5E DATA CABLE, 24 AWG, BONDED TWISTED PAIRS, SOLID BARE COPPER, MAX. ATTENUATION 32dB/100m @ 200MHz, MAX DELAY SKEW 510ns/100m, NOM MUTUAL CAPACITANCE @ 1KHz 15pF/FT, MAX DC RESISTANCE 9Ω/100m	0.200	BELDEN	1700A
S1	SPEAKER	LOUDSPEAKER LEVEL OR CIRCUIT WIRING GREATER THAN +24dBu, FROM 20Hz TO 20kHz, 16 AWG, STRANDED, TWISTED PAIR, PLENUM RATED.	0.180	BELDEN	6200UE
V1	VIDEO (ANALOG & DIGITAL)	RG-59, PRECISION VIDEO CABLE, 75Ω, 20AWG, NOM ATTN -13.4dB/100ft @ 3GHz	0.235	BELDEN	1505A
V2	RGBHV CABLE	BNC-5 MINI HIGH RESOLUTION CABLE, 75Ω, 26AWG, NOM ATTN -43.6/100ft @ 3GHz,	0.361	EXTRON	BNC-5 MHR
V8	A/V UTP SKEW FREE CABLE & CONTROL	SKEW FREE: 24AWG, SOLID COPPER TWISTED PAIR, NOM RESISTANCE 28.6Ω/1000FT CAPACITANCE 330 pF/FT, DELAY SKEW 15nS/100m. CONTROL: 22AWG DATA NOM IMPEDANCE 100Ω, 18AWG POWER.	0.216	CRESTRON	CRESTCAT-QM-NP

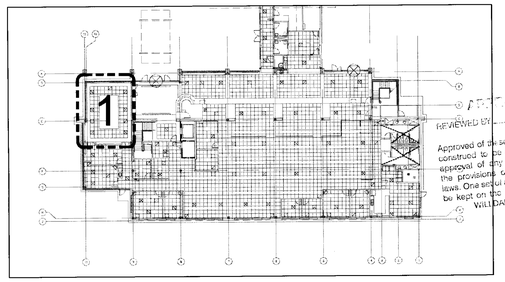

APPROVED
MAY 01 2006
BUILDING & SAFETY
CITY OF FONTANA

LANGDON WILSON
ARCHITECTURE
PLANNING
INTERIORS

18800 VON KARMAN AVENUE, SUITE 200
IRVINE, CALIFORNIA 92612-1517
949 - 833 - 9193

STRUCTURAL
KPFF 949 - 252 - 1022
MECHANICAL
TKSC 949 - 756 - 0565
ELECTRICAL
GLP 714 - 751 - 1851
LANDSCAPE
FRANK RADMACHER 714 - 832 - 1774
CIVIL ENGINEER
IKE CONSULTING 714 - 241 - 0606
AUDIO / VISUAL
VENEKLASEN ASSOCIATES 310 - 450 - 1733
DATA TELEPHONE
PLANNET CONSULTING 714 - 982 - 5800

CITY OF FONTANA
DEVELOPMENT SERVICES
ORGANIZATION BUILDING

8353 SIERRA AVENUE FONTANA, CALIFORNIA

REV.	DATE	ISSUED FOR	REV.	DATE	ISSUED FOR
	08-12-05	SCHEMATICS			
	10-17-05	DD PACKAGE			

Stamp

DATE: 8-12-05 SCALE: 3/16" = 1'-0"

DRAWN BY:

JOB NO. 2388-091-000 CADD TITLE: AV201

SHEET TITLE:

FIRST FLOOR AV RCP

SHEET NUMBER:

AV201

©Copyright 2005 Langdon Wilson

BID SET 04-17-06

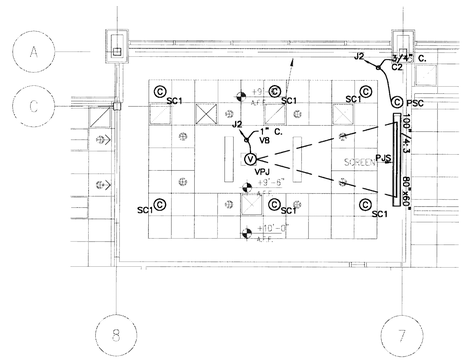

CONFERENCE ROOM #229 - SECOND FLOOR RCP

SCALE: 3/16" = 1'-0"

1

WIRE SCHEDULE

TYPE	APPLICATION	DESCRIPTION (FIXED INSTALL CABLE)	O.D.	MANUF.	PART NO.
A1	AUDIO ANALOG/DIGITAL CABLE	ANALOG/DIGITAL AUDIO CABLE, MICROPHONE AND LINE LEVEL WIRING, LESS THAN +24 dBu, FROM 20Hz TO 20kHz, 22 AWG, IMPEDANCE 110Ω ±20%, CAPACITANCE 26pF/FT, 100% SHIELDED, STRANDED TWISTED PAIR	0.177	BELDEN	1800B
C2	CONTROL / PWR SUPPLY	CONTROL CABLE AC/DC - 24 GAGE, 2 PAIR, TWISTED, TINNED COPPER	0.244	BELDEN	9744
D1	DATA SERIAL CABLE RS232-485	SERIAL DATA CABLE, 24 AWG, TINNED COPPER, 100% FOIL, 65% TC BRAID SHIELD, TWISTED 2 PAIR	0.270	BELDEN	8132
D2	CAT 5E DATA NETWORK CABLE	CATEGORY 5E DATA CABLE, 24 AWG, BONDED TWISTED PAIRS, SOLID BARE COPPER, MAX. ATTENUATION 32dB/100m @ 200MHz, MAX DELAY SKEW 510ns/100m, NOM MUTUAL CAPACITANCE @ 1KHz 15pF/FT, MAX DC RESISTANCE 9Ω/100m	0.200	BELDEN	1700A
S1	SPEAKER	LOUDSPEAKER LEVEL OR CIRCUIT WIRING GREATER THAN +24dBu, FROM 20Hz TO 20kHz, 16 AWG, STRANDED, TWISTED PAIR, PLENUM RATED.	0.180	BELDEN	6200UE
V1	VIDEO (ANALOG & DIGITAL)	RG-59, PRECISION VIDEO CABLE, 75Ω, 20AWG, NOM ATTN -13.4dB/100ft @ 3GHz	0.235	BELDEN	1505A
V2	RGBHV CABLE	BNC-5 MINI HIGH RESOLUTION CABLE, 75Ω, 26AWG, NOM ATTN -43.6/100ft @ 3GHz,	0.361	EXTRON	BNC-5 MHR
V8	A/V UTP SKEW FREE CABLE & CONTROL	SKEW FREE: 24AWG, SOLID COPPER TWISTED PAIR, NOM RESISTANCE 28.6Ω/1000FT CAPACITANCE 330 pF/FT, DELAY SKEW 15nS/100m. CONTROL: 22AWG DATA NOM IMPEDANCE 100Ω, 18AWG POWER.	0.216	CRESTRON	CRESTCAT-QM-NP

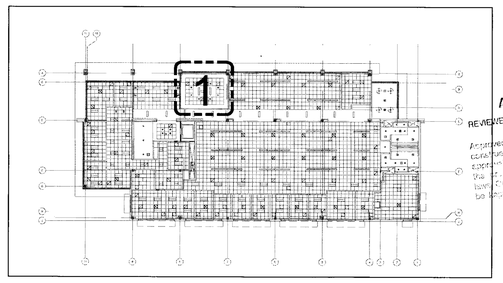

APPROVED
MAY 11 2006
BUILDING & SAFETY
CITY OF FONTANA

REVIEWED BY _____ DATE

Acceptance of these plans shall not be construed to be a waiver of any or all requirements of any ordinance or law. The [illegible] shall be responsible for the work until completion.

N

LANGDON WILSON
ARCHITECTURE
PLANNING
INTERIORS

18800 VON KARMAN AVENUE, SUITE 200
IRVINE, CALIFORNIA 92612-1517
949 - 833 - 9193

STRUCTURAL
KPFF 949 - 252 - 1022
MECHANICAL
TKSC 949 - 756 - 0565
ELECTRICAL
GLP 714 - 751 - 1851
LANDSCAPE
FRANK RADMACHER 714 - 832 - 1774
CIVIL ENGINEER
IKE CONSULTING 714 - 241 - 0606
AUDIO / VISUAL
VENEKLASEN ASSOCIATES 310 - 450 - 1733
DATA TELEPHONE
PLANNET CONSULTING 714 - 982 - 5800

CITY OF FONTANA

DEVELOPMENT SERVICES
ORGANIZATION BUILDING

8353 SIERRA AVENUE FONTANA, CALIFORNIA

CITY OF FONTANA CALIFORNIA

REV.	DATE	ISSUED FOR	REV.	DATE	ISSUED FOR
	08-12-05	SCHEMATICS			
	10-17-05	DD PACKAGE			

Stamp

DATE: 8-12-05 SCALE: 3/16" = 1'-0"

DRAWN BY:

JOB NO. 2388-091-000 CADD TITLE: AV202

SHEET TITLE:

SECOND FLOOR AV RCP

SHEET NUMBER:

AV202

©Copyright 2005 Langdon Wilson

BID SET 04-17-06

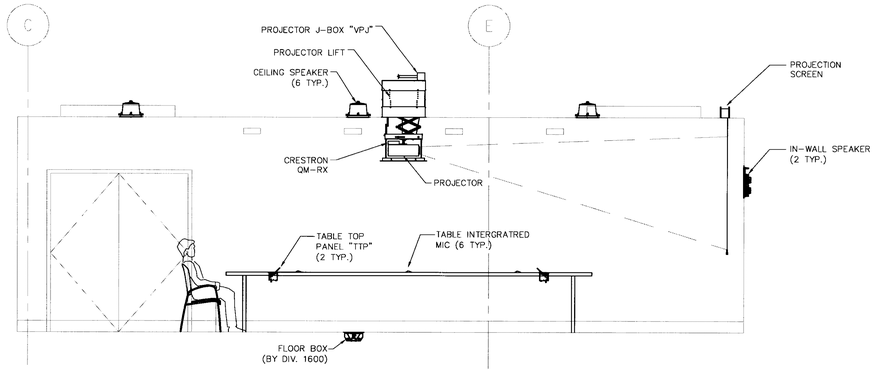

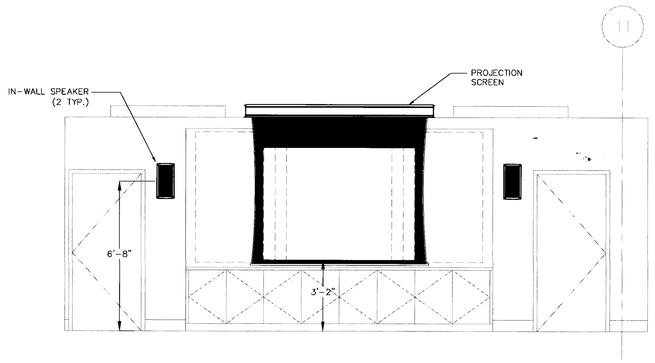

DAB CONFERENCE ROOM #125 - SECTION AND ELEVATION

SCALE: 3/8" = 1'-0"

1

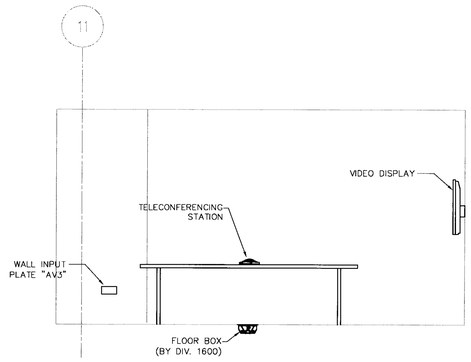

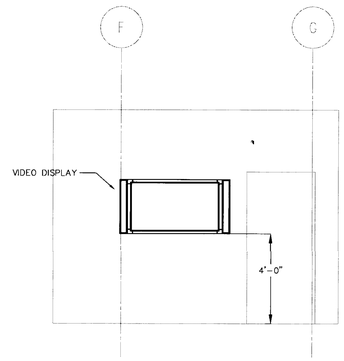

CONFERENCE ROOM #123 - SECTION AND ELEVATION

SCALE: 3/8" = 1'-0"

2

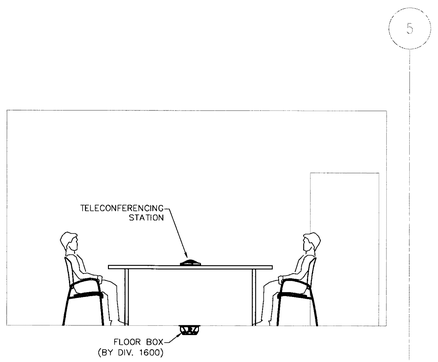

CONFERENCE ROOM #132 - SECTION

SCALE: 3/8" = 1'-0"

3

NOTES:

1. ALIGN FLOOR BOX "AV1" WITH THE TABLE LEG. PROVIDE AN ACCESS PANEL IN TABLE LEG.
2. FOR USE BY DATA TELEPHONE CONTRACTOR.
3. JUNCTION BOX TO BE PLACED DIRECTLY BEHIND RACK.

APPROVED
MAY 11 2006
BUILDING & SAFETY
CITY OF FONTANA

APPROVED
BY/REVIEWED BY _____ DATE
Approval of these plans shall not be construed as a waiver of, or an exception to, any provision of any ordinance in the City of Fontana. The contractor shall be responsible for the plans thereon on site at all times until completion.

LANGDON WILSON
ARCHITECTURE
PLANNING
INTERIORS

18800 VON KARMAN AVENUE, SUITE 200
IRVINE, CALIFORNIA 92612-1517
949 - 833 - 9193

STRUCTURAL
KPFF 949 - 252 - 1022
MECHANICAL
TKSC 949 - 756 - 0565
ELECTRICAL
GLP 714 - 751 - 1851
LANDSCAPE
FRANK RADMACHER 714 - 832 - 1774
CIVIL ENGINEER
IKE CONSULTING 714 - 241 - 0606
AUDIO / VISUAL
VENEKLASEN ASSOCIATES 310 - 450 - 1733
DATA TELEPHONE
PLANNET CONSULTING 714 - 982 - 5800

CITY OF FONTANA
DEVELOPMENT SERVICES
ORGANIZATION BUILDING

8353 SIERRA AVENUE FONTANA, CALIFORNIA

CITY OF FONTANA CALIFORNIA

REV.	DATE	ISSUED FOR	REV.	DATE	ISSUED FOR
	08-12-05	SCHEMATICS			
	10-17-05	DD PACKAGE			

Stamp

DATE: 8-12-05 SCALE: 3/8" = 1'-0"
DRAWN BY:
JOB NO. 2388-091-000 CADD TITLE: AV271

SHEET TITLE:
AV 1ST FLOOR ELEVATIONS

SHEET NUMBER:
AV271

©Copyright 2005 Langdon Wilson

BID SET 04-17-06

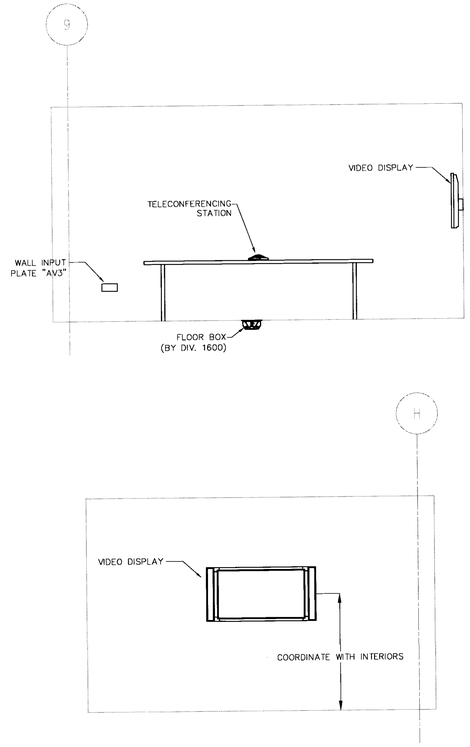

OFFICE #211 - SECTION AND ELEVATION

SCALE: 3/8" = 1'-0"

1

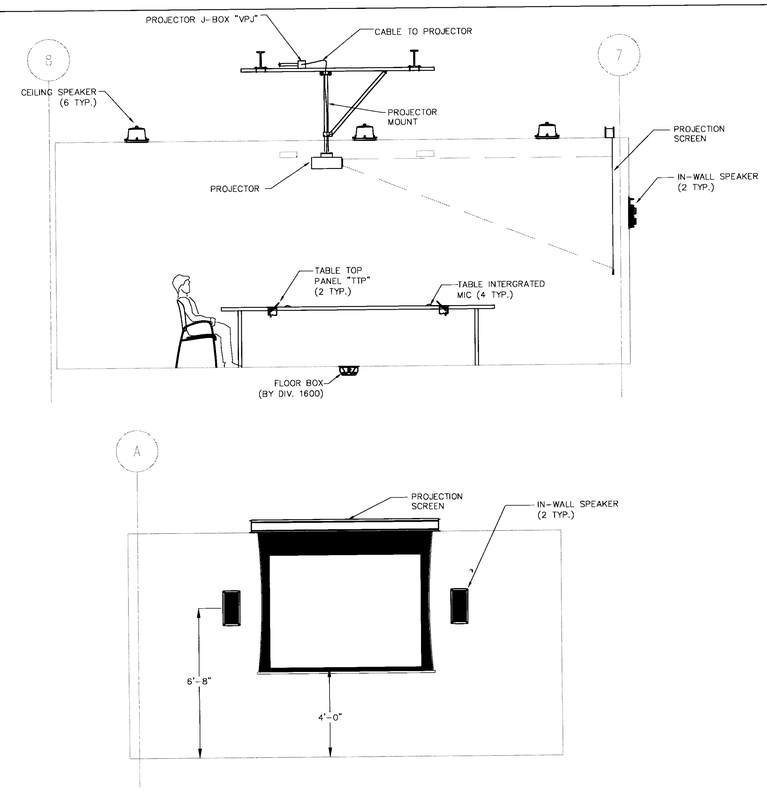

OFFICE #229 - SECTION AND ELEVATION

SCALE: 3/8" = 1'-0"

2

NOTES:

1. ALIGN FLOOR BOX "AV1" WITH THE TABLE LEG. PROVIDE AN ACCESS PANEL IN TABLE LEG.
2. FOR USE BY DATA TELEPHONE CONTRACTOR.
3. JUNCTION BOX TO BE PLACED DIRECTLY BEHIND RACK.

APPROVED
MAY 0 1 2006
BUILDING & SAFETY
CITY OF FONTANA

REVIEWED BY

Approved of these [illegible] construed to be [illegible] approval of any [illegible] the provisions of the [illegible] laws. One set of approved [illegible] be kept on the job until completion.
WILLDAN

LANGDON WILSON
ARCHITECTURE
PLANNING
INTERIORS

18800 VON KARMAN AVENUE, SUITE 200
IRVINE, CALIFORNIA 92612-1517
949 - 833 - 9193

STRUCTURAL
KPFF 949 - 252 - 1022
MECHANICAL
TKSC 949 - 756 - 0565
ELECTRICAL
GLP 714 - 751 - 1851
LANDSCAPE
FRANK RADMACHER 714 - 832 - 1774
CIVIL ENGINEER
IKE CONSULTING 714 - 241 - 0606
AUDIO / VISUAL
VENEKLASEN ASSOCIATES 310 - 450 - 1733
DATA TELEPHONE
PLANNET CONSULTING 714 - 982 - 5800

CITY OF FONTANA
DEVELOPMENT SERVICES
ORGANIZATION BUILDING
8353 SIERRA AVENUE FONTANA, CALIFORNIA

REV.	DATE	ISSUED FOR	REV.	DATE	ISSUED FOR
	08-12-05	SCHEMATICS			
	10-17-05	DD PACKAGE			

Stamp

DATE: 8-12-05 SCALE: 3/8" = 1'-0"
DRAWN BY:
JOB NO. 2388-091-000 CADD TITLE: AV272

SHEET TITLE:
AV 2ND FLOOR ELEVATIONS

SHEET NUMBER:
AV272

©Copyright 2005 Langdon Wilson

BID SET 04-17-06

SPEAKERS

CEILING SPEAKER | CEILING SPEAKER W/TRANSFORMER | MONITOR SPEAKER | HORN

MID & LOW SPEAKER | 2 WAY SPEAKER | 3 WAY SPEAKER | HORN W/TRANSFORMER

SINGLE SUB WOOFER | DUAL SUB WOOFER | QUAD SUBWOOFER | SELF POWERED SPEAKER

3-WAY POWERED SPEAKER | 3-WAY SPEAKER?? | IN-WALL SPEAKER | PLASMA SPEAKER

POWERED LINE ARRAY SPEAKER | LINE ARRAY SPEAKER | UNDERWATER SPEAKER | PLANTER SPEAKER

AMPLIFIERS

SINGLE CHANNEL | DUAL CHANNEL | 3 CHANNEL | 4 CHANNEL

BRIDGE | TOP HALF | MIDDLE HALF | BOTTOM HALF

VIDEO

VIDEO PROJECTOR | VIDEO PROJECTOR | PAN AND TILT CAMERA | VIDEO CAMERA

TELEVISION | VIDEO MONITOR | PLASMA SCREEN | PROJECTION SCREEN

SATELLITE | DOCUMENT CAMERA

DEVICES

DEVICE | TOP HALF | BOTTOM HALF

JUNCTION BOXES

J-BOX

MISCELLANEOUS SYMBOLS

COMPUTER | KEYBOARD | MOUSE | WIRELESS MOUSE

LAPTOP PC | WIRELESS TOUCH PANEL | TOUCH PANEL | DOCK ABLE TOUCH PANEL

TABLE TOP MICROPHONE | HAND HELD MICROPHONE | WIRELESS HAND HELD MICROPHONE | LAVALIERE MICROPHONE

CEILING MICROPHONE | GOOSENECK MICROPHONE | PAGING MICRHOPHONE | BELT PACK

HEADSET BELTPACK | HEADSET PLUGIN | ANTENNA | INFRA RED EMITTER

ATTENUATOR | TRANSFORMER | 10K POT | LIGHTING PROTECTION

SYMBOL KEY

SCALE: NTS

1

LINE CONVENTIONS

AUDIO LINE
CONTROL LINE
VIDEO LINE
RACK
INTERCOM
MULTI
SPEAKER
RF
AREA
WIRE BUSS
'Y' CONNECTION

DRAWING AND SIGNAL NAVIGATION

TO DEVICE | PAGE TO ID NUMBER — PAGE TO
PAGE FROM ID NUMBER | FROM DEVICE — PAGE FROM
FROM EXTERNAL SYSTEM
TO EXTERNAL SYSTEM

AUDIO PATCH POINTS

HALF NORMAL BRIDGING
HALF NORMAL
FULL NORMAL
IN
OUT

I/O CONNECTIONS

SCREW TERMINAL
TERMINAL — DEVICE INPUT
TERMINAL — DEVICE OUTPUT
CONNECTOR/CONNECTION POINT

WIRING KEY

SCALE: NTS

2

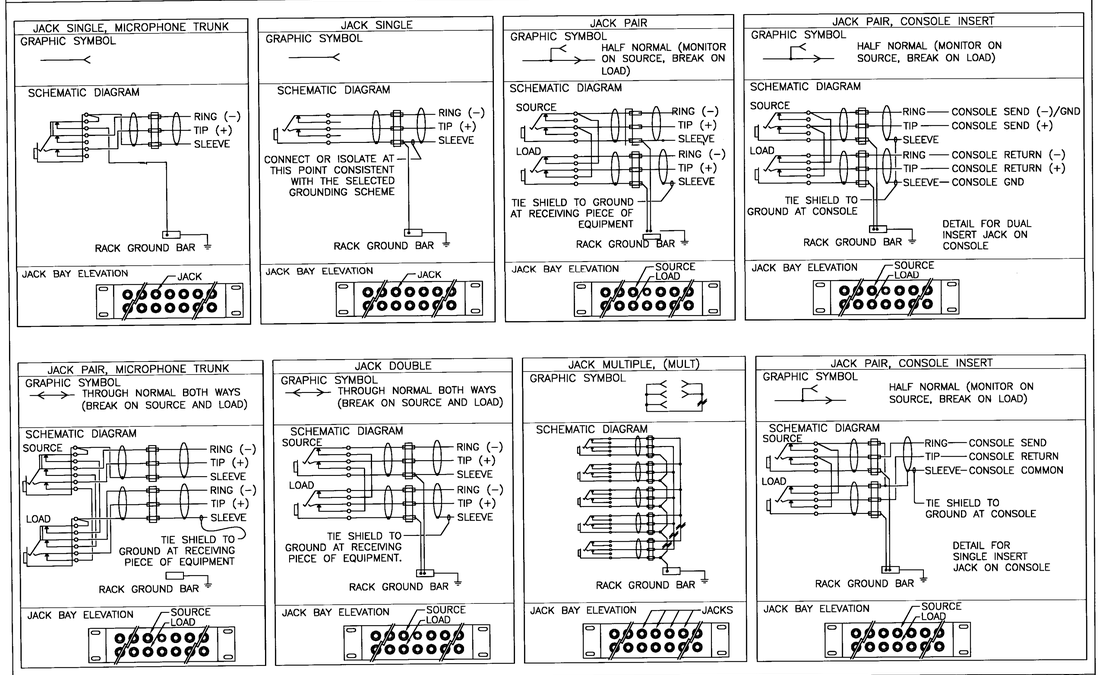

GROUNDING DIAGRAM SCHEMES

SCALE:

3

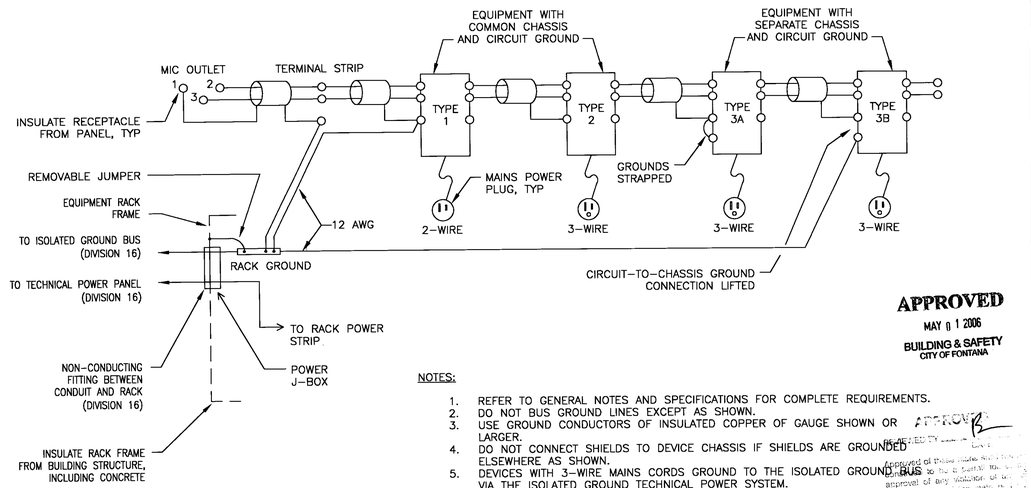

APPROVED
MAY 01 2006
BUILDING & SAFETY
CITY OF FONTANA

NOTES:

1. REFER TO GENERAL NOTES AND SPECIFICATIONS FOR COMPLETE REQUIREMENTS.
2. DO NOT BUS GROUND LINES EXCEPT AS SHOWN.
3. USE GROUND CONDUCTORS OF INSULATED COPPER OF GAUGE SHOWN OR LARGER.
4. DO NOT CONNECT SHIELDS TO DEVICE CHASSIS IF SHIELDS ARE GROUNDED ELSEWHERE AS SHOWN.
5. DEVICES WITH 3-WIRE MAINS CORDS GROUND TO THE ISOLATED GROUND BUS VIA THE ISOLATED GROUND TECHNICAL POWER SYSTEM.

GROUNDING DETAIL

SCALE: NTS

4

LANGDON WILSON
ARCHITECTURE
PLANNING
INTERIORS

18800 VON KARMAN AVENUE, SUITE 200
IRVINE, CALIFORNIA 92612-1517
949 · 833 · 9193

STRUCTURAL
KPFF 949 · 252 · 1022
MECHANICAL
TKSC 949 · 756 · 0565
ELECTRICAL
GLP 714 · 751 · 1851
LANDSCAPE
FRANK RADMACHER 714 · 832 · 1774
CIVIL ENGINEER
IKE CONSULTING 714 · 241 · 0606
AUDIO / VISUAL
VENEKLASEN ASSOCIATES 310 · 450 · 1733
DATA TELEPHONE
PLANNET CONSULTING 714 · 982 · 5800

CITY OF FONTANA
DEVELOPMENT SERVICES
ORGANIZATION BUILDING
8353 SIERRA AVENUE FONTANA, CALIFORNIA

REV.	DATE	ISSUED FOR	REV.	DATE	ISSUED FOR
	08-12-05	SCHEMATICS			
	10-17-05	DD PACKAGE			

Stamp

DATE: 8-12-05 SCALE: NTS
DRAWN BY:
JOB NO. 2388-091-000 CADD TITLE: AV300

SHEET TITLE:
WIRING SCHEMES & SYMBOLS

SHEET NUMBER:
AV300

©Copyright 2005 Langdon Wilson

BID SET 04-17-06

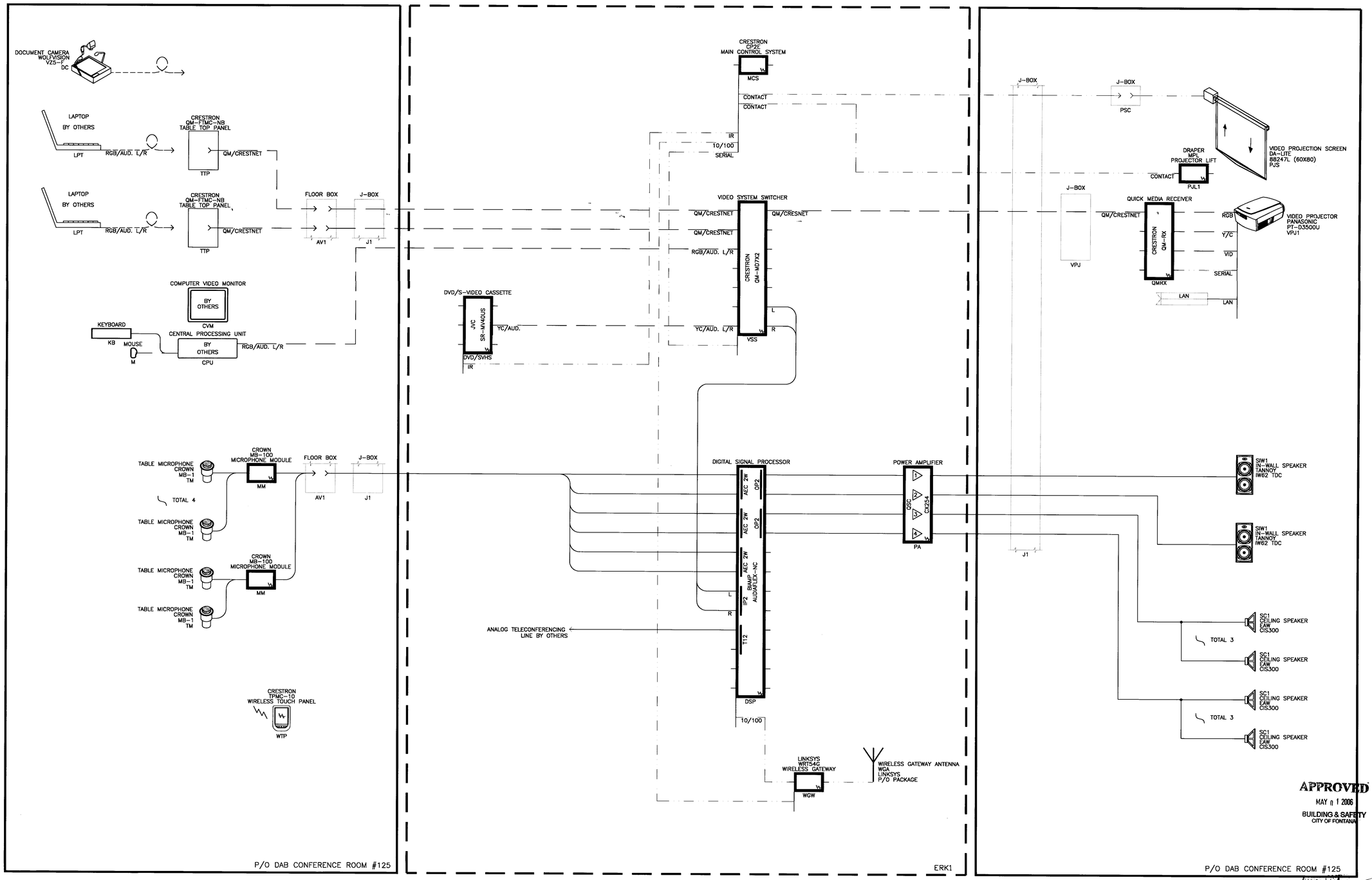

APPROVED
MAY 01 2006
BUILDING & SAFETY
CITY OF FONTANA

REVIEWED BY _____ DATE

Approved of these plans shall not be construed to be a permit for, or an approval of any violation of any of the provisions of the laws. One set of plans shall be kept on the job until completion of the work.

LANGDON WILSON
ARCHITECTURE
PLANNING
INTERIORS

18800 VON KARMAN AVENUE, SUITE 200
IRVINE, CALIFORNIA 92612-1517
949 - 833 - 9193

STRUCTURAL
KPFF 949 - 252 - 1022
MECHANICAL
TKSC 949 - 756 - 0565
ELECTRICAL
GLP 714 - 751 - 1851
LANDSCAPE
FRANK RADMACHER 714 - 832 - 1774
CIVIL ENGINEER
IKE CONSULTING 714 - 241 - 0606
AUDIO / VISUAL
VENEKLASEN ASSOCIATES 310 - 450 - 1733
DATA TELEPHONE
PLANNET CONSULTING 714 - 982 - 5800

CITY OF FONTANA

DEVELOPMENT SERVICES
ORGANIZATION BUILDING

8353 SIERRA AVENUE FONTANA, CALIFORNIA

REV.	DATE	ISSUED FOR	REV.	DATE	ISSUED FOR
	08-12-05	SCHEMATICS			
	10-17-05	DD PACKAGE			

Stamp

DATE: 8-12-05 SCALE: NTS
DRAWN BY:
JOB NO. 2388-091-000 CADD TITLE AV301

SHEET TITLE
AV ONELINE DIAGRAM

SHEET NUMBER:
AV301

©Copyright 2005 Langdon Wilson

BID SET 04-17-06

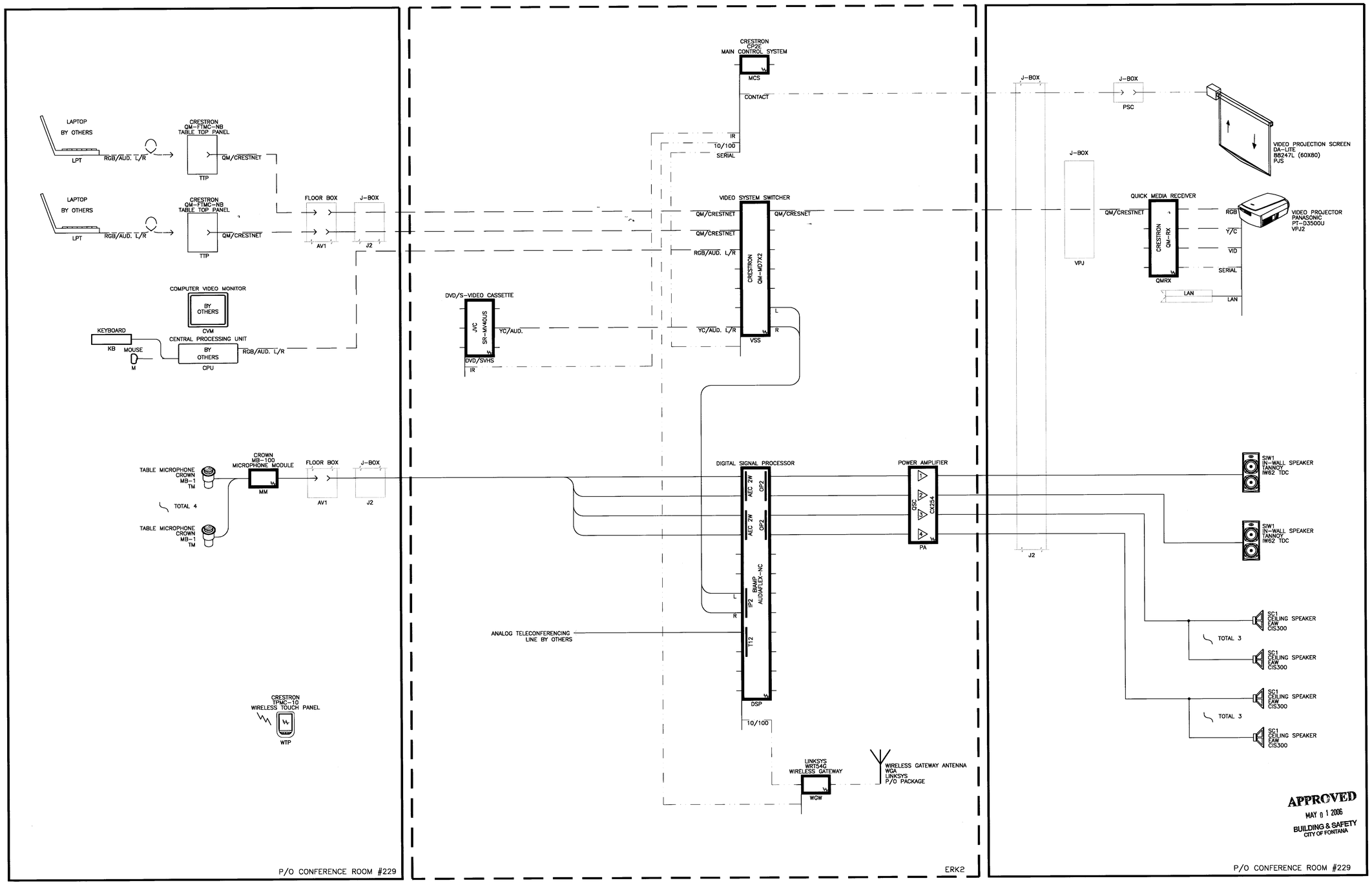

APPROVED
MAY 0 1 2006
BUILDING & SAFETY
CITY OF FONTANA

APPROVED
REVIEWED BY

Approved of these plans ... construed to be ... approval of any ... the provisions ... laws. Once ... be kept ...

LANGDON WILSON
ARCHITECTURE
PLANNING
INTERIORS

18800 VON KARMAN AVENUE, SUITE 200
IRVINE, CALIFORNIA 92612-1517
949 - 833 - 9193

STRUCTURAL
KPFF 949 - 252 - 1022
MECHANICAL
TKSC 949 - 756 - 0565
ELECTRICAL
GLP 714 - 751 - 1851
LANDSCAPE
FRANK RADMACHER 714 - 832 - 1774
CIVIL ENGINEER
IKE CONSULTING 714 - 241 - 0606
AUDIO / VISUAL
VENEKLASEN ASSOCIATES 310 - 450 - 1733
DATA TELEPHONE
PLANNET CONSULTING 714 - 982 - 5800

CITY OF FONTANA
DEVELOPMENT SERVICES
ORGANIZATION BUILDING

8353 SIERRA AVENUE FONTANA, CALIFORNIA

REV.	DATE	ISSUED FOR	REV.	DATE	ISSUED FOR
	08-12-05	SCHEMATICS			
	10-17-05	DD PACKAGE			

Stamp

DATE: 8-12-05 SCALE: NTS
DRAWN BY:
JOB NO. 2388-091-000 CADD TITLE: AV302

SHEET TITLE:
AV ONELINE DIAGRAM

SHEET NUMBER:
AV302

©Copyright 2005 Langdon Wilson

BID SET 04-17-06

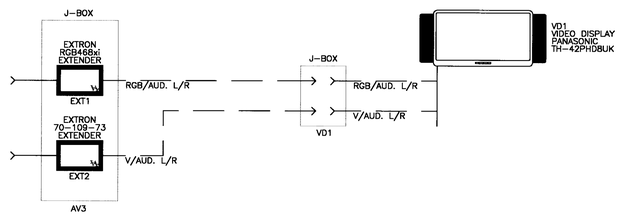

CONFERENCE ROOM #123 AND #211

LANGDON
WILSON
ARCHITECTURE
PLANNING
INTERIORS

18800 VON KARMAN AVENUE, SUITE 200
IRVINE, CALIFORNIA 92612-1517
949 - 833 - 9193

STRUCTURAL
KPFF 949 - 252 - 1022
MECHANICAL
TKSC 949 - 756 - 0565
ELECTRICAL
GLP 714 - 751 - 1851
LANDSCAPE
FRANK RADMACHER 714 - 832 - 1774
CIVIL ENGINEER
IKE CONSULTING 714 - 241 - 0606
AUDIO / VISUAL
VENEKLASEN ASSOCIATES 310 - 450 - 1733
DATA TELEPHONE
PLANNET CONSULTING 714 - 982 - 5800

CITY OF FONTANA

DEVELOPMENT SERVICES
ORGANIZATION BUILDING

8353 SIERRA AVENUE FONTANA, CALIFORNIA

CITY OF FONTANA CALIFORNIA

REV.	DATE	ISSUED FOR	REV.	DATE	ISSUED FOR
	08-12-05	SCHEMATICS			
	10-17-05	DD PACKAGE			

Stamp

APPROVED
MAY 01 2006
BUILDING & SAFETY
CITY OF FONTANA

APPROVED
REVIEWED BY ____ DATE ____

Approved of these plans shall not be construed to be a permit for, or an approval of any violation of any of the provisions of any local law. Approval of these plans shall not be construed to permit, authorize or approve the construction of any building or structure in violation of any local law.

DATE: 8-12-05 SCALE: NTS
DRAWN BY:
JOB NO. 2388-091-000 CADD TITLE AV303

SHEET TITLE:
AV ONELINE DIAGRAM

SHEET NUMBER:
AV303

©Copyright 2005 Langdon Wilson

BID SET 04-17-06

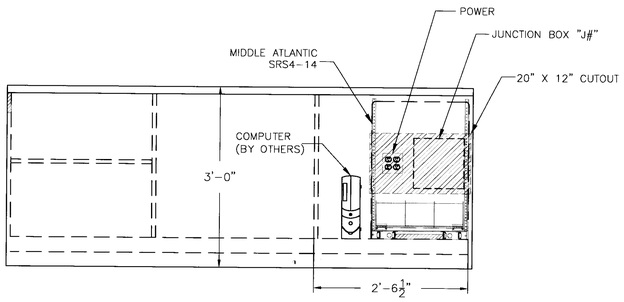

NOTE:
*ADJUST HEIGHT OF EQUIPMENT RACK TO MATCH MILLWORK.
*COORDINATE WITH MILLWORK CONTRACTOR.

TYPICAL CREDENZA ELEVATION | SCALE: 1" = 1'-0" | 1

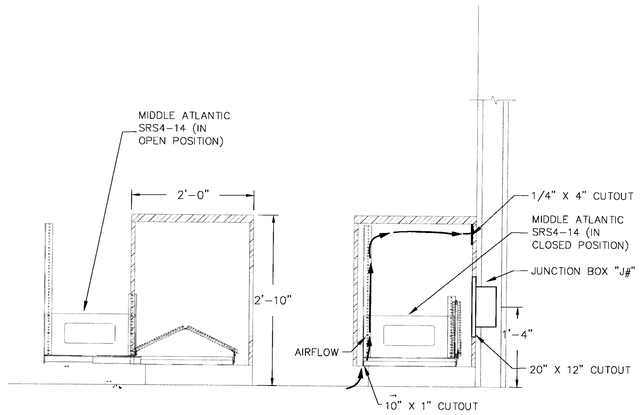

NOTE:
*ADJUST HEIGHT OF EQUIPMENT RACK TO MATCH MILLWORK.
*COORDINATE WITH MILLWORK CONTRACTOR.

TYPICAL CREDENZA SECTION | SCALE: 1" = 1'-0" | 2

LANGDON WILSON
ARCHITECTURE
PLANNING
INTERIORS

18800 VON KARMAN AVENUE, SUITE 200
IRVINE, CALIFORNIA 92612-1517
949 · 833 · 9193

STRUCTURAL
KPFF 949 · 252 · 1022
MECHANICAL
TKSC 949 · 756 · 0565
ELECTRICAL
GLP 714 · 731 · 1851
LANDSCAPE
FRANK RADMACHER 714 · 832 · 1774
CIVIL ENGINEER
IKE CONSULTING 714 · 241 · 0606
AUDIO / VISUAL
VENEKLASEN ASSOCIATES 310 · 450 · 1733
DATA TELEPHONE
PLANNET CONSULTING 714 · 982 · 5800

CITY OF FONTANA
DEVELOPMENT SERVICES
ORGANIZATION BUILDING

8353 SIERRA AVENUE FONTANA, CALIFORNIA

CITY OF FONTANA CALIFORNIA

REV.	DATE	ISSUED FOR	REV.	DATE	ISSUED FOR
	08-12-05	SCHEMATICS			
	10-17-05	DD PACKAGE			

Stamp

APPROVED
MAY 01 2006
BUILDING & SAFETY
CITY OF FONTANA

REVIEWED BY _____ DATE

Approved of these plans shall not be construed as an approval of any violation of any of the provisions of the state or local laws. Or shall it be taken as an approval of any violation of the provisions of the state or local laws.

DATE: 8-12-05 SCALE: 1" = 1'-0"
DRAWN BY:
JOB NO. 2388-091-000 CADD TITLE AV451

SHEET TITLE:
TYPICAL CREDENZA LAYOUT

SHEET NUMBER:
AV451

©Copyright 2005 Langdon Wilson

BID SET 04-17-06

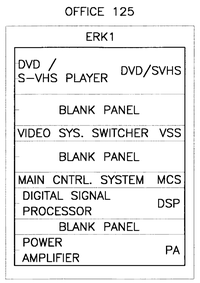

NOTE:
*WIRELESS GATEWAY "WGW" MOUNTED IN REAR OF EQUIPMENT RACK

EQUIPMENT RACK "ERK1" ELEVATION | SCALE: NTS | 1

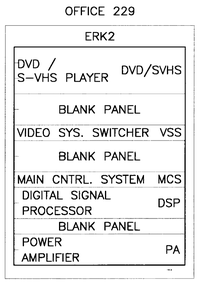

NOTE:
*WIRELESS GATEWAY "WGW" MOUNTED IN REAR OF EQUIPMENT RACK

EQUIPMENT RACK "ERK2" ELEVATION | SCALE: NTS | 2

LANGDON WILSON
ARCHITECTURE
PLANNING
INTERIORS

18800 VON KARMAN AVENUE, SUITE 200
IRVINE, CALIFORNIA 92612-1517
949 - 833 - 9193

STRUCTURAL
KPFF 949 - 252 - 1022
MECHANICAL
TKSC 949 - 756 - 0565
ELECTRICAL
GLP 714 - 751 - 1851
LANDSCAPE
FRANK RADMACHER 714 - 832 - 1774
CIVIL ENGINEER
IKE CONSULTING 714 - 241 - 0606
AUDIO / VISUAL
VENEKLASEN ASSOCIATES 310 - 450 - 1733
DATA TELEPHONE
PLANNET CONSULTING 714 - 982 - 5800

CITY OF FONTANA
DEVELOPMENT SERVICES
ORGANIZATION BUILDING
8353 SIERRA AVENUE FONTANA, CALIFORNIA

REV.	DATE	ISSUED FOR	REV.	DATE	ISSUED FOR
	08-12-05	SCHEMATICS			
	10-17-05	DD PACKAGE			

Stamp

APPROVED
MAY 01 2006
BUILDING & SAFETY
CITY OF FONTANA

REVIEWED BY _____ DATE _____

Approved of these plans [illegible] construed to be a permit for [illegible] approval of any violation of [illegible] the provisions of the [illegible] laws. One set of approved [illegible] be kept on the job [illegible] WILLIAMS

DATE: 8-12-05 SCALE: NTS
DRAWN BY:
JOB NO. 2388-091-000 CADD TITLE: AV501

SHEET TITLE:
EQUIPMENT RACK ELEVATION

SHEET NUMBER:
AV501

©Copyright 2005 Langdon Wilson

BID SET 04-17-06

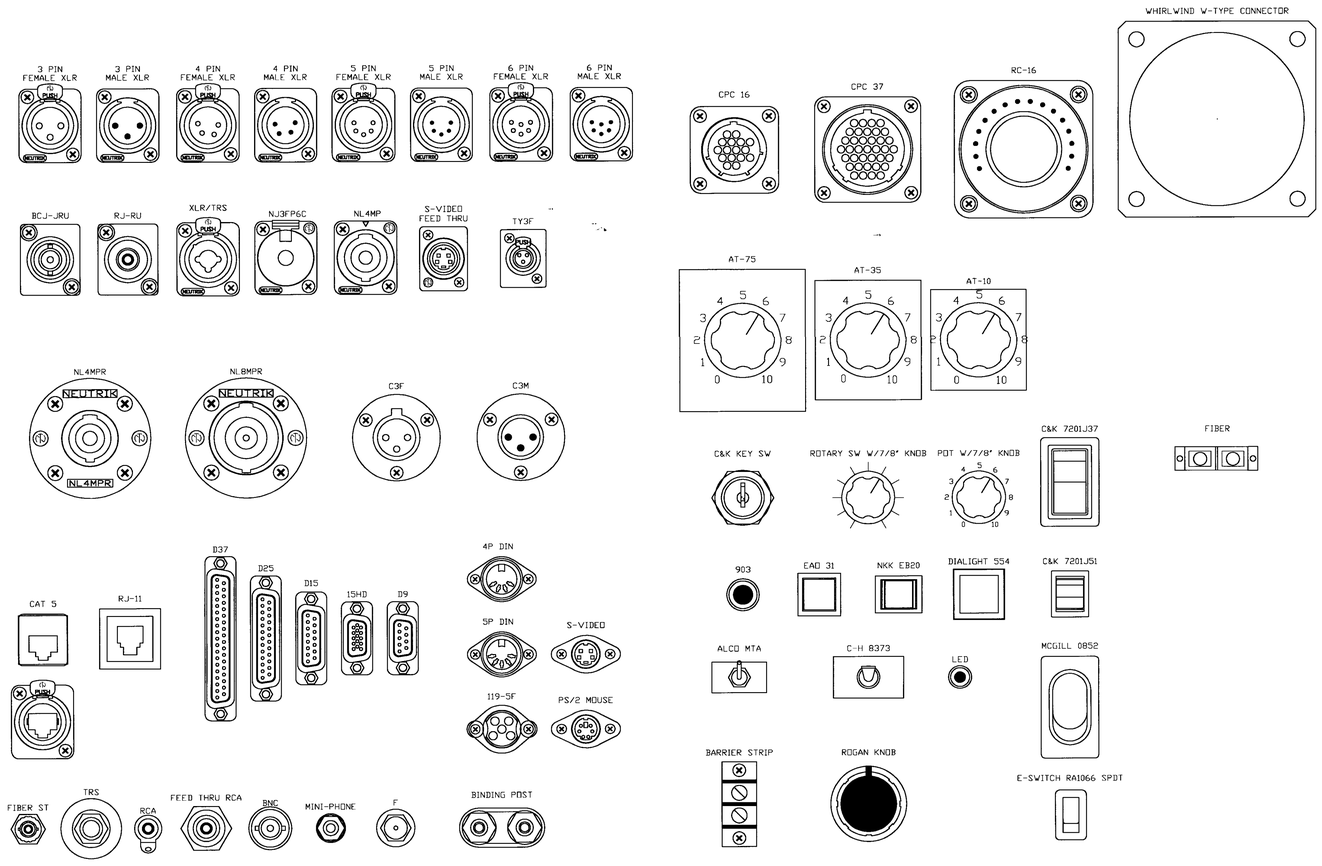

LANGDON WILSON
ARCHITECTURE
PLANNING
INTERIORS

18800 VON KARMAN AVENUE, SUITE 200
IRVINE, CALIFORNIA 92612-1597
949 - 833 - 9193

STRUCTURAL
KPFF 949 - 252 - 1022
MECHANICAL
TKSC 949 - 756 - 0565
ELECTRICAL
GLP 714 - 751 - 3851
LANDSCAPE
FRANK RADMACHER 714 - 832 - 1774
CIVIL ENGINEER
IKE CONSULTING 714 - 241 - 0606
AUDIO / VISUAL
VENEKLASEN ASSOCIATES 310 - 450 - 1733
DATA TELEPHONE
PLANNET CONSULTING 714 - 982 - 5800

CITY OF FONTANA

DEVELOPMENT SERVICES ORGANIZATION BUILDING

8353 SIERRA AVENUE FONTANA, CALIFORNIA

REV.	DATE	ISSUED FOR	REV.	DATE	ISSUED FOR
	08-12-05	SCHEMATICS			
	10-17-05	DD PACKAGE			

Stamp

APPROVED
MAY 01 2006
BUILDING & SAFETY
CITY OF FONTANA

APPROVED
REVIEWED BY ____ DATE

Approval of these plans shall not be construed to be a permit for, or an approval of any violation of any of the provisions of the uniform codes or the ordinances of the City of Fontana. Compliance with all applicable codes and ordinances will govern.

DATE 8-12-05 SCALE NTS
DRAWN BY:
JOB NO. 2388-091-000 CADD TITLE AV650

SHEET TITLE:
PANEL CONNECTOR KEY

SHEET NUMBER:
AV650

©Copyright 2005 Langdon Wilson

BID SET 04-17-06

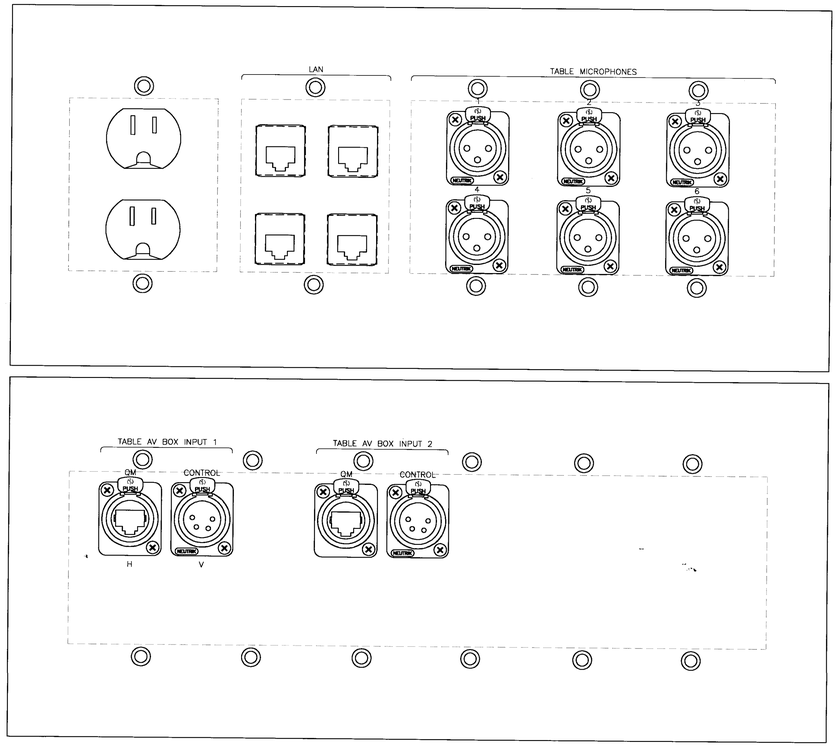

FLOOR BOX "AV1" PANEL LAYOUT | SCALE: NTS | 1

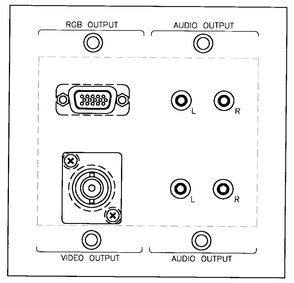

VIDEO DISPLAY BOX "VD1" PANEL LAYOUT | SCALE: NTS | 2

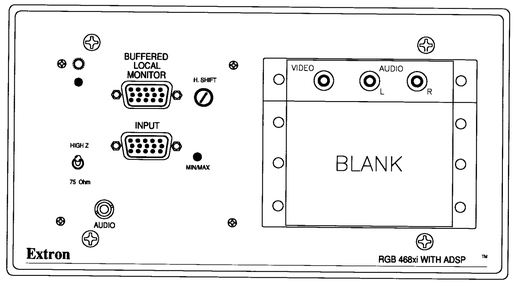

WALL BOX "AV3" PANEL LAYOUT | SCALE: NTS | 3

LANGDON WILSON
ARCHITECTURE
PLANNING
INTERIORS

18800 VON KARMAN AVENUE, SUITE 200
IRVINE, CALIFORNIA 92612-1517
949 - 833 - 9193

STRUCTURAL
KPFF 949 - 252 - 1022
MECHANICAL
TKSC 949 - 756 - 0565
ELECTRICAL
GLP 714 - 751 - 1851
LANDSCAPE
FRANK RADMACHER 714 - 832 - 1774
CIVIL ENGINEER
IKE CONSULTING 714 - 241 - 0606
AUDIO / VISUAL
VENEKLASEN ASSOCIATES 310 - 450 - 1733
DATA TELEPHONE
PLANNET CONSULTING 714 - 982 - 5800

CITY OF FONTANA
DEVELOPMENT SERVICES ORGANIZATION BUILDING

8353 SIERRA AVENUE FONTANA, CALIFORNIA

CITY OF FONTANA CALIFORNIA

REV.	DATE	ISSUED FOR	REV.	DATE	ISSUED FOR
	08-12-05	SCHEMATICS			
	10-17-05	DD PACKAGE			

Stamp

APPROVED
MAY 11 2006
BUILDING & SAFETY
CITY OF FONTANA

REVIEWED BY ... DATE

Approval of these plans shall not be construed to be a permit for, or an approval of any violation of any of the provisions of the state or city laws. One set of approved plans must be kept on the job until completion.
WILLDAN

DATE: 8-12-05 SCALE: NTS
DRAWN BY:
JOB NO. 2388-091-000 CADD TITLE AV651

SHEET TITLE:
PANEL LAYOUTS

SHEET NUMBER:
AV651

©Copyright 2005 Langdon Wilson

BID SET 04-17-06

CITY OF FONTANA

DEVELOPMENT SERVICES ORGANIZATION BUILDING

LANDSCAPE CONSTRUCTION DRAWINGS

GENERAL NOTES

1. ALL MATERIALS, INSTALLATIONS AND WORKMANSHIP SHALL CONFORM TO THE CITY OF FONTANA LANDSCAPE GUIDELINES.
2. CONTRACTOR SHALL CONTACT "DIG ALERT" PRIOR TO STARTING ANY DIGGING OR CONSTRUCTION WORK ON THIS PROJECT.

DIGALERT
DIAL TOLL FREE
1-800-227-2600
AT LEAST TWO DAYS BEFORE YOU DIG
UNDERGROUND SERVICE ALERT OF SOUTHERN CALIFORNIA

SHEET INDEX

L001	TITLE SHEET
L002	GRADING PLAN
L003	CONSTRUCTION PLAN
L004	CONSTRUCTION DETAILS
L005	IRRIGATION PLAN
L006	IRRIGATION DETAILS
L007	IRRIGATION SPECIFICATIONS
L008	PLANTING PLAN
L009	PLANTING DETAILS & SPECIFICATIONS

VICINITY MAP

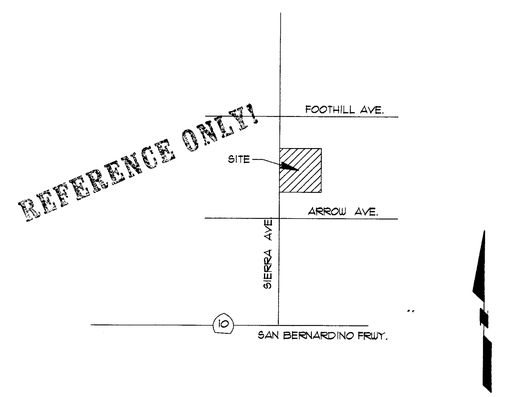

LANGDON WILSON
ARCHITECTURE
PLANNING
INTERIORS
18600 VON KARMAN AVENUE, SUITE 200
IRVINE, CALIFORNIA 92612-1517
949 • 833 • 9783

FRANK RADMACHER ASSOCIATES, INC.
Landscape Architects
PHONE (714) 832-1774 FAX (714) 832-5721
14841 Yorba Street, Suite 204 — Tustin, CA 92780
EMAIL: F-R-A@PACBELL.NET

CITY OF FONTANA

REV.	DATE	ISSUED FOR	REV.	DATE	ISSUED FOR
				12-05-05	PLAN CHECK
				2-06-06	PLAN CHECK RESUB.
				3-27-06	PERMIT SET BID SET
				4-17-06	PERMIT SET BID SET

Stamp

LANDSCAPE TITLE SHEET

L001

PLAN CHECK SUBMITTAL 2-06-06 BID SET 4/17/06 PERMIT SET 4/17/06

FRA JOB NO. 2791

\\Iridium\2700's\2791 Fontana City Hall\2791 Title Sheet L001.dwg, 4/13/2006 12:51:48 PM, HP800.pc3, 1:1.2, gp

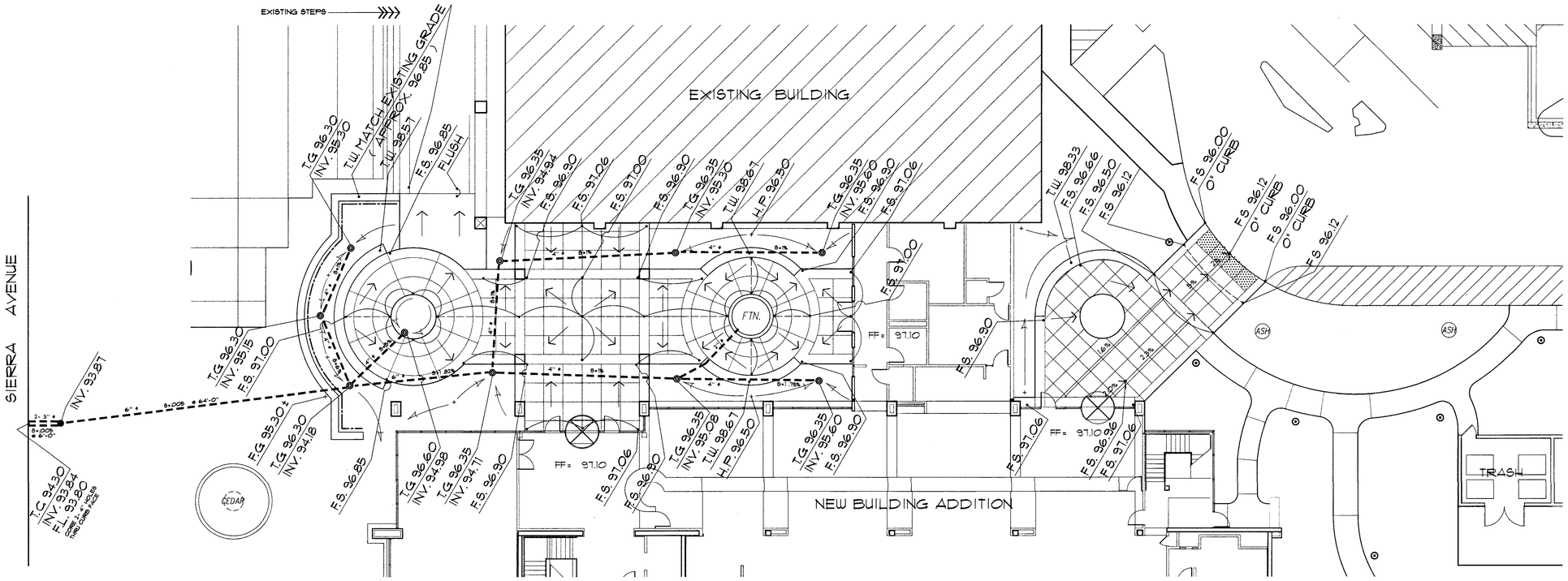

ABBREVIATIONS

F.F.	FINISH FLOOR
F.G.	FINISH GRADE
F.S.	FINISH SURFACE
H.P.	HIGH POINT
INV.	INVERT ELEVATION
T.W.	TOP OF WALL
T.G.	TOP OF GRATE
T.C.	TOP OF CURB

GRADING LEGEND

(1255.00) ELEVATIONS PER CIVIL ENGINEERS GRADING PLANS

1256.00 PROPOSED ELEVATIONS

- - - - - 4" ϕ DRAIN PIPE (OTHER SIZES NOTED)

—·—·— 3" ϕ PERFORATED DRAIN PIPE, CONNECT TO ADJACENT DRAIN SYSTEM

● 8" ϕ ATRIUM GRATE ON SPEE-D-BASIN COLOR: GREEN BY NATIONAL DIVERSIFIED SALES

● CLEAN OUT ● REDUCER DETAIL, SEE DETAIL 'A' / L-002

NOTES

1. ALL MATERIALS AND WORKMANSHIP TO CONFORM TO GOVERNING CODES AND ORDINANCES.
2. HOLD FINISH GRADES 1" BELOW ADJACENT FINISH SURFACES.
3. HOLD FINISH GRADES 6" MINIMUM BELOW FINISH FLOORS.
4. ALL LANDSCAPED AREAS TO DRAIN AT A MINIMUM OF 1%.
5. FINISH SURFACES TO DRAIN AT A MINIMUM OF 1%.
6. LAIN AREAS SHALL NOT EXCEED A SLOPE OF 4:1.
7. ALL JUNCTIONS AND CHANGES OF DIRECTIONS TO BE MADE WITH SWEEP ELLS OR 45.
8. CONTR. SHALL BE RESPONSIBLE FOR ACHIEVING PROPER DRAINAGE IRRESPECTIVE OF HOW THE SITE IS RECEIVED.
9. DRAIN AND PERFORATED PIPES SHALL BE P.V.C. OR A.B.S. SDR 35.

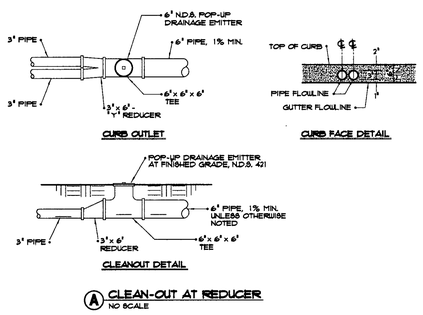

Ⓐ CLEAN-OUT AT REDUCER
NO SCALE

DIGALERT
DIAL TOLL FREE
1-800-227-2600
AT LEAST TWO DAYS BEFORE YOU DIG
UNDERGROUND SERVICE ALERT OF SOUTHERN CALIFORNIA

REFERENCE ONLY!

NORTH
1"=10'

LANGDON WILSON
ARCHITECTURE
PLANNING
INTERIORS
18500 VON KARMAN AVENUE, SUITE 200
IRVINE, CALIFORNIA 92612-1517
949 • 833 • 9783

FRANK RADMACHER ASSOCIATES, INC.
Landscape Architects
PHONE (714) 832-1774 FAX (714) 832-5721
14841 Yorba Street, Suite 204 · Tustin, CA 92780
EMAIL: F-R-A@PACBELL.NET

CITY OF FONTANA
DEVELOPMENT SERVICES
ORGANIZATION BUILDING

8353 SIERRA AVENUE FONTANA, CALIFORNIA

REV.	DATE	ISSUED FOR	REV.	DATE	ISSUED FOR
			-	2/6/06	PLAN CHK RESUB.
				3-27-06	BID SET PERMIT SET
				4-17-06	BID SET PERMIT SET

Stamp

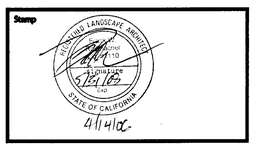

4/14/06

GRADING PLAN

L002
OF

FRA JOB NO. 2791

PLAN CHECK SUBMITTAL 2-06-06 BID SET 3/27/06 PERMIT SET 4/17/06

\\Iridium\2700's\2791 Fontana City Hall\2791 L-2 grading plan.dwg, 4/13/2006 2:14:56 PM, HP800.pc3, 1:120, gp

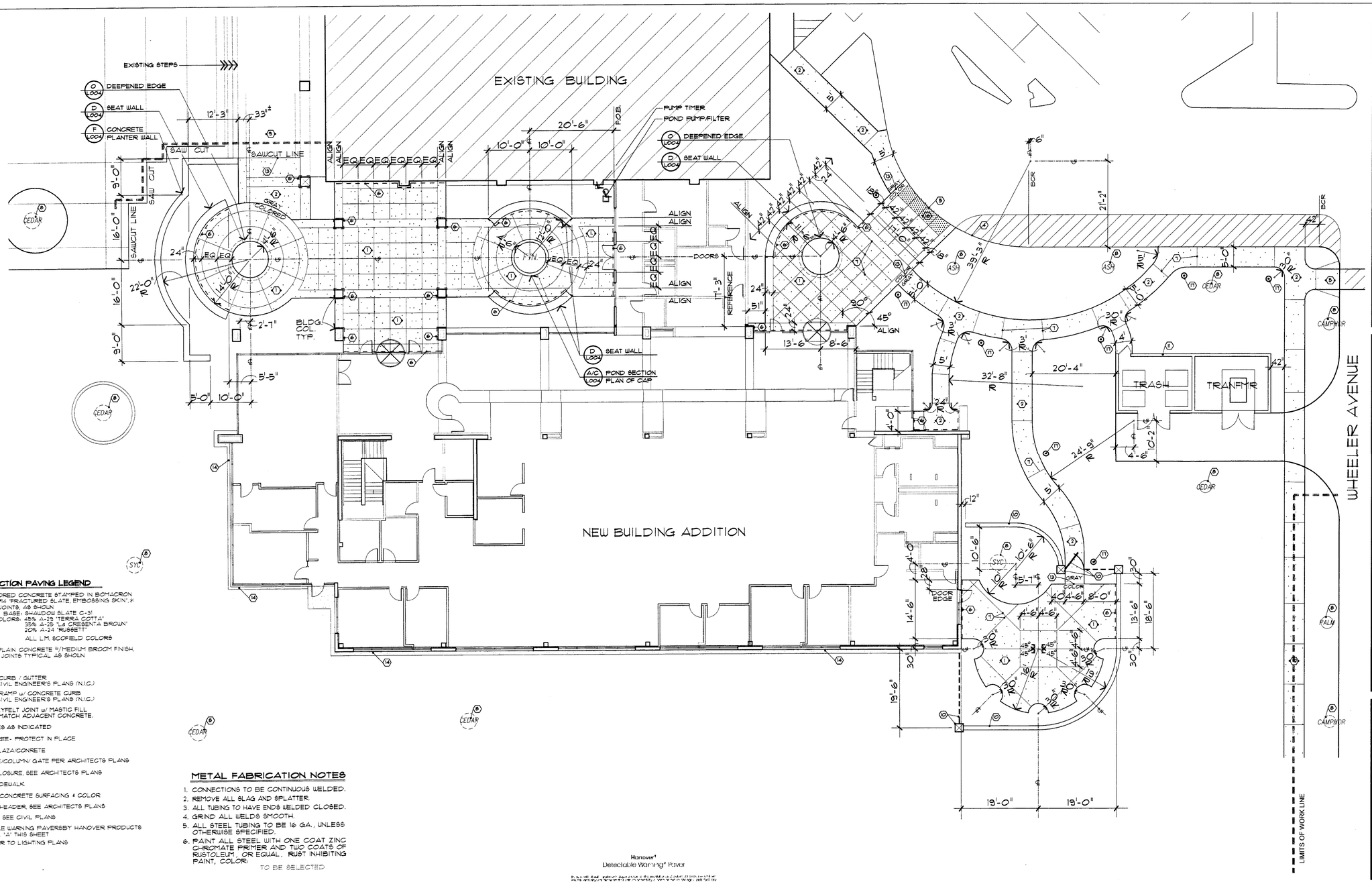

CONSTRUCTION PAVING LEGEND

- (1) 4" THK. COLORED CONCRETE STAMPED IN BOMACRON PATTERN: "#4 FRACTURED SLATE, EMBOSSING SKIN", w/ SAW CUT JOINTS, AS SHOWN.
  COLOR: BASE: SHADOW SLATE C-31
  RELEASE COLORS: 45% A-29 'TERRA COTTA'
  35% A-25 'LA CRESENTA BROWN'
  20% A-24 'RUSSETT'
  ALL L.M. SCOFIELD COLORS
- (2) 3½" THICK, PLAIN CONCRETE w/MEDIUM BROOM FINISH, EXPANSION JOINTS TYPICAL AS SHOWN
- (3)
- (4) CONCRETE CURB / GUTTER REFER TO CIVIL ENGINEER'S PLANS (N.I.C.)
- (5) CONCRETE RAMP w/ CONCRETE CURB REFER TO CIVIL ENGINEER'S PLANS (N.I.C.)
- (6) ½" WIDE POLYFELT JOINT w/ MASTIC FILL COLOR TO MATCH ADJACENT CONCRETE.
- (7) SCORE LINES AS INDICATED
- (8) EXISTING TREE- PROTECT IN PLACE
- (9) EXISTING PLAZA/CONRETE
- (10) WALL/FENCE/COLUMN/ GATE PER ARCHITECTS PLANS
- (11) TRASH ENCLOSURE, SEE ARCHITECTS PLANS
- (12) EXISTING SIDEWALK
- (13) CHANGE IN CONCRETE SURFACING & COLOR
- (14) CONCRETE HEADER, SEE ARCHITECTS PLANS
- (15) AC PAVING, SEE CIVIL PLANS
- (16) DETECTABLE WARNING PAVERS BY HANOVER PRODUCTS SEE DETAIL 'A' THIS SHEET
- (17) LIGHT, REFER TO LIGHTING PLANS

GENERAL NOTES: FOR MASONRY CONSTRUCTION WALLS

1. CONCRETE SHALL BE MACHINE MIXED. PROPORTIONS TO BE 1/3% 3% BY VOLUME USING A MAXIMUM OF 1 GALLONS OF WATER PER SACK OF CEMENT UNLESS APPROVED OTHERWISE. CONCRETE SHALL HAVE A MINIMUM ULTIMATE COMPRESSIVE STRENGTH OF 2500 P.S.I. AT 28 DAYS, UNLESS NOTED OTHERWISE. PORTLAND CEMENT SHALL BE TYPE II FROM TESTED STOCK PER ASTM C-150 UNLESS PERMITTED OTHERWISE IN SOILS REPORT.
2. CONCRETE MASONRY UNITS FOR HOLLOW UNIT MASONRY CONSTRUCTION, SHALL BE GRADE N, I UNITS CONFORMING TO THE REQUIREMENTS OF ASTM C-90. THE ULTIMATE COMPRESSIVE STRENGTH OF THE MASONRY WALL GROUTED SOLID, SHALL BE A MINIMUM OF f'm = 1500 P.S.I.
3. MORTAR SHALL BE FRESHLY PREPARED AND UNIFORMLY MIXED OF 1 PART PORTLAND CEMENT, ½ MAXIMUM TO ¼ MINIMUM PARTS LIME PUTTY OR HYDRATED LIME AND 2½ TO 3 PARTS CLEAN WASHED SAND. MORTAR TO BE TYPE "S" WITH WITH A MINIMUM ULTIMATE COMPRESSIVE STRENGTH OF 2500 P.S.I. AT 28 DAYS.
4. GROUT WALL SOLID UNLESS OTHERWISE NOTED. GROUT SHALL BE PROPORTIONED BY VOLUME AND SHALL HAVE SUFFICIENT WATER ADDED TO PRODUCE CONSISTENCY FOR POURING WITHOUT SEGREGATION. FINE GROUT IN SPACES 2" OR LESS, SHALL BE COMPOSED OF 1 PART PORTLAND CEMENT, TO WHICH MAY BE ADDED NOT MORE THAN ½ PART HYDRATED LIME OR LIME PUTTY AND 2¼ TO 3 PARTS SAND. FOR COURSE GROUT ADD 1 TO 2 PARTS PEA GRAVEL TO THE FINE GROUT. GROUT SHALL ATTAIN A MINIMUM ULTIMATE COMPRESSIVE STRENGTH OF 2500 P.S.I. AT 28 DAYS. VERIFY W/SOILS REPORT.
5. REINFORCING STEEL SHALL CONFORM TO ASTM A-615 GRADE 40 FOR #4 BARS AND LESS, GRADE 60 FOR #5 BARS AND GREATER, UNLESS OTHERWISE NOTED.
6. ALL CONTINUOUS BARS OR DOWELS SHALL LAP A MINIMUM 40 BAR DIAMETERS IN CONCRETE AND MASONRY, UNLESS OTHERWISE NOTED.
7. EXCAVATE FOR FOUNDATIONS TO THE DEPTHS SHOWN ON THE DRAWINGS BELOW UNDISTURBED SOIL OR COMPACTED EARTH, 12" MINIMUM UNLESS OTHERWISE NOTED.
8. TELEPHONE THE STRUCTURAL ENGINEER IF SITE CONDITIONS ARE NOT AS SHOWN.
9. DO NOT BACKFILL WALL SOONER THAN 7 DAYS OR PRIOR TO REACHING STRENGTHS REQUIRED IN ITEMS 2, 4, AND 5 ABOVE.
10. DO NOT BACKFILL RETAINING WALLS WITH HEAVY EQUIPMENT CLOSER THAN THE VERTICAL HEIGHT OF WALL.
11. DESIGN EQUIVALENT FLUID PRESSURE IS FROM SOILS REPORT OR REQUESTED BY OWNER AND IS NOT THE RESPONSIBILITY OF THIS ENGINEER.
12. MASONRY CONSTRUCTION SHALL CONFORM WITH ALL APPLICABLE CODES AND ORDINANCES (1991 UNIFORM BUILDING CODE).
13. WATERPROOFING SEAL COAT BACKSIDE OF WALL IN CONTACT WITH EARTH USING THOROSEAL FOUNDATION COATING. APPLY PER MANUFACTURERS SPECIFICATIONS.

METAL FABRICATION NOTES

1. CONNECTIONS TO BE CONTINUOUS WELDED.
2. REMOVE ALL SLAG AND SPLATTER.
3. ALL TUBING TO HAVE ENDS WELDED CLOSED.
4. GRIND ALL WELDS SMOOTH.
5. ALL STEEL TUBING TO BE 16 GA., UNLESS OTHERWISE SPECIFIED.
6. PAINT ALL STEEL WITH ONE COAT ZINC CHROMATE PRIMER AND TWO COATS OF RUSTOLEUM , OR EQUAL , RUST INHIBITING PAINT, COLOR:
   TO BE SELECTED

CONSTRUCTION NOTES

1. ALL CONSTRUCTION SHALL CONFORM TO GOVERNING CODES AND ORDINANCES.
2. ALL CONSTRUCTION TO BE PLUMB AND TRUE, UNLESS OTHERWISE SPECIFIED.
3. ALLOW FOR ADJOINING CONSTRUCTION.
4. REFER TO FINISH GRADING PLANS, L-002, L-003 FOR GRADING AND DRAINAGE INFORMATION.
5. WALL DIMENSIONS APPLY TO FACE OF FIRST COURSE (INCLUDING VENEER).
6. WALL CONSTRUCTION JOINTS TO OCCUR AT INTERVALS SPECIFIED ON DETAILS.
7. PAVING CONTRACTOR SHALL COORDINATE WITH DRAIN CONTRACTOR, IRRIGATION CONTRACTOR AND ELECTRICAL CONTRACTOR TO ENSURE THAT ALL SLEEVING AND CROSSINGS ARE PROVIDED FOR PRIOR TO POURING CONCRETE.
8. ALL CONCRETE TO OBTAIN A COMPRESSIVE STRENGTH OF 2500 P.S.I. MINIMUM IN 28 DAYS. VERIFY W/SOILS REPORT.
9. INSTALL ½" WIDE POLYFELT JOINT W/ MASTIC FILL AT ALL CONDITIONS WHERE CONCRETE PAVING IS AGAINST THE BUILDING EDGE.
10. ** PAVING CONTRACTOR SHALL VERIFY WITH PROJECT SOILS ENGINEER THE NEED FOR REINFORCING, BASE MATERIALS, PRESATURATION, ETC. FOR WALKS, FOOTINGS, DECKS, GUNITE, ETC.
11. ** PAVING CONTRACTOR SHALL VERIFY WITH PROJECT SOILS ENGINEER THE VALUE FOR COMPRESSIVE STRENGTH, THE CONCRETE MIX COMPOSITION, ADDITIVES, ETC.

** CONTRACTORS SPECIFIC RESPONSIBILITY

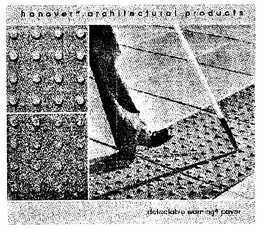

HANOVER ARCHITECTURAL PRODUCTS
240 BENDER ROAD, HANOVER, PA. 17331
ph. (717) 637-0800 fax: (717) 637-7148

(A) DECORATIVE WARNING PAVER
NO SCALE

Hanover®
Detectable Warning® Paver

Truncated Dome Detail & Dimensions
Aligned Grain Format

HANOVER
Architectural Products

COLOR: TO BE SELECTED

DIGALERT
DIAL TOLL FREE
1-800-227-2600
AT LEAST TWO DAYS
BEFORE YOU DIG
UNDERGROUND SERVICE ALERT OF SOUTHERN CALIFORNIA

REFERENCE ONLY

NORTH
1"=10'

LANGDON WILSON
ARCHITECTURE
PLANNING
INTERIORS
18000 VON KARMAN AVENUE, SUITE 200
IRVINE, CALIFORNIA 92612-0127
949 - 833 - 1983

FRANK RADMACHER ASSOCIATES, INC.
Landscape Architects
PHONE (714) 832-1774 FAX (714) 832-5721
14841 Yorba Street, Suite 204 Tustin, CA 92780
EMAIL: F-R-A@PACBELL.NET

CITY OF FONTANA
DEVELOPMENT SERVICES ORGANIZATION BUILDING

8353 SIERRA AVENUE FONTANA, CALIFORNIA

REV.	DATE	ISSUED FOR.	REV.	DATE	ISSUED FOR.
			12-5		PLAN CHECK
			2-6-06		PLAN CHECK RESUBMITTAL
			3-27-06		BID SET PERMIT SET
			4-17-06		BID SET PERMIT SET

Stamp

CONSTRUCTION PLAN

L003
OF

PLAN CHECK SUBMITTAL 4/17/06 BID SET 4/17/06 PERMIT SET 4/17/06

FRA JOB NO. 2791

\\Iridium\2700's\2791 Fontana City Hall\2791 L-3, L-4 construction plan.dwg, 4/13/2006 2:16:58 PM, HP800 FAST.pc3, 1:1.20, gp

FOUNTAIN / POND CONSTRUCTION NOTES

POND CONTRACTOR SHALL PROVIDE SHOP DRAWINGS, ENGINEERING AND SPECIFICATIONS TO ADDRESS ALL NECESSARY ELEMENTS INCLUDING (BUT NOT LIMITED TO) THE FOLLOWING:

1. PUMP SIZE, LOCATION AND ENCLOSURE.
2. FILTRATION EQUIPMENT.
3. ALL REQUIRED PLUMBING INCLUDING RETURN LINES, DRAINLINES AND SUCTION LINES (SIZE, LOCATION, MATERIAL) AS WELL AS ALL VALVES AND FLOW-BALANCING EQUIPMENT.
4. ALL ELECTRICAL REQUIREMENTS FOR PUMP, LIGHTING AND TIME CLOCK.

POND CONTRACTOR SHALL OBTAIN ALL REQUIRED PERMITS AND SHALL INCLUDE ALL NECESSARY LABOR AND MATERIALS TO CONSTRUCT A STRUCTURALLY SOUND AND FUNCTIONING FOUNTAIN DISPLAY AS REPRESENTED BY THESE PLANS AND DETAILS. INSTALL IN CONFORMANCE WITH GOVERNING CODES AND EXISTING SOIL CONDITIONS.

STRUCTURAL CALCS REQUIRED PRIOR TO CONSTRUCTION

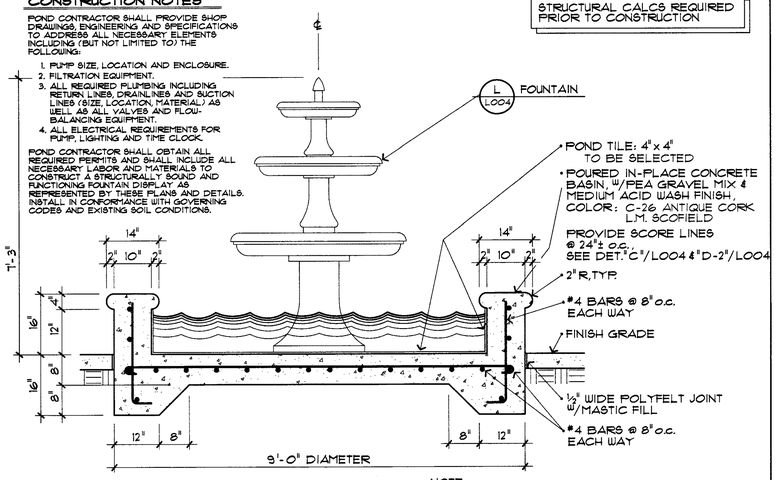

NOTE:
1. REFER TO MASONRY NOTES, SHEET L003
INSTALL ¾" SCHEDULE 40 P.V.C. FILL LINE. SEE IRRIGATION PLANS FOR VALVE LOCATION.

A POND SECTION
¾" = 1'-0"

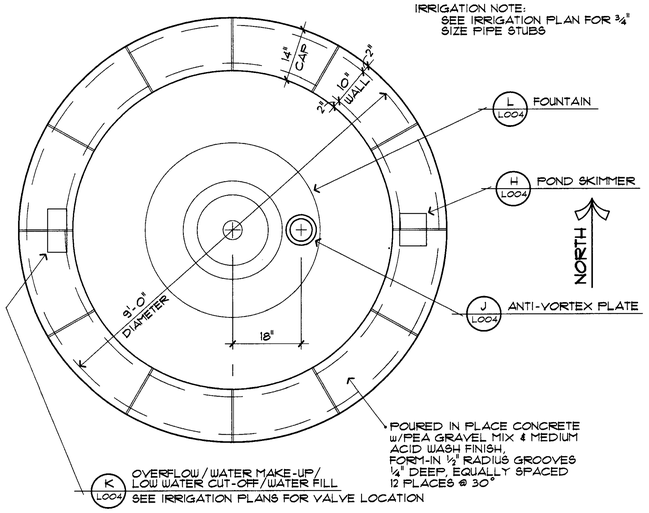

C PLAN OF CAP
¾" = 1'-0"

STRUCTURAL CALCS REQUIRED PRIOR TO CONSTRUCTION

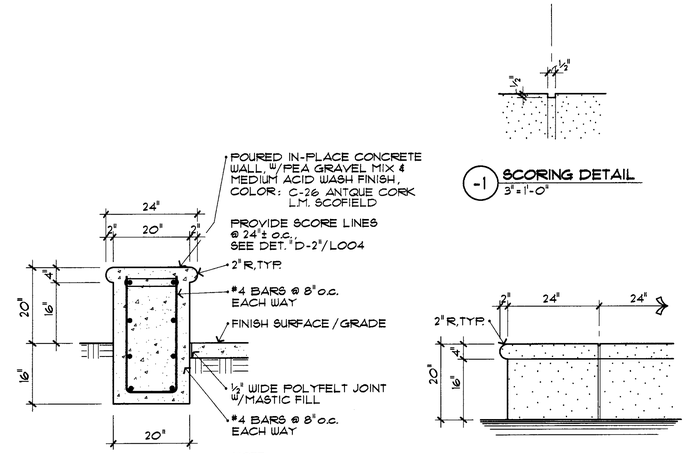

NOTE:
1. REFER TO MASONRY NOTES, SHEET L003

D SEAT WALL
¾" = 1'-0"

-1 SCORING DETAIL
3" = 1'-0"

-2 WALL END DETAIL
¾" = 1'-0"

LANGDON WILSON
18000 VON KARMAN AVENUE, SUITE 200
IRVINE, CALIFORNIA 92612-1217
949 • 833 • 9193

FRANK RADMACHER ASSOCIATES, INC.
Landscape Architects
PHONE (714) 832-1774 FAX (714) 832-5721
14841 Yorba Street, Suite 204 - Tustin, CA 92780
EMAIL: F-R-A@PACBELL.NET

CITY OF FONTANA
CIVIC CENTER
8353 SIERRA AVENUE FONTANA, CALIFORNIA

"H" MAX.	"B"	"C"	"D"	"A" BARS
24" MAX.	18"	6"	0"	#4 BARS @ 12" O.C.
44" MAX.	30"	12"	6"	#4 BARS @ 8" O.C.

STRUCTURAL CALCS REQUIRED PRIOR TO CONSTRUCTION

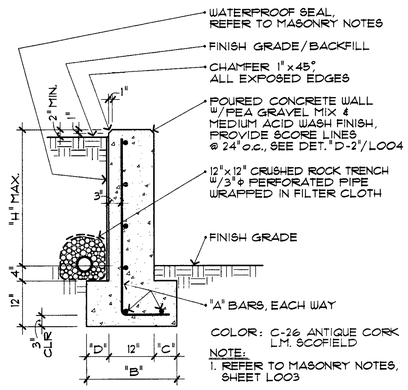

COLOR: C-26 ANTIQUE CORK L.M. SCOFIELD
NOTE:
1. REFER TO MASONRY NOTES, SHEET L003

F CONCRETE PLANTER WALL
¾" = 1'-0"

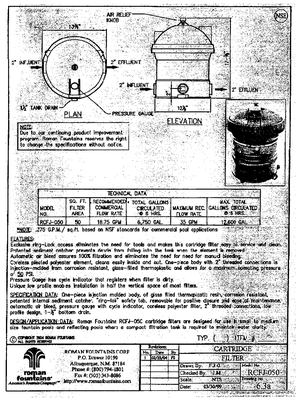

#RCFJ-050 CARTRIDGE FILTER
ROMAN FOUNTAINS CORP.
ALBUQUERQUE, N. M. 87184
ph. (800) 794-1801

G CARTRIDGE FILTER
NO SCALE

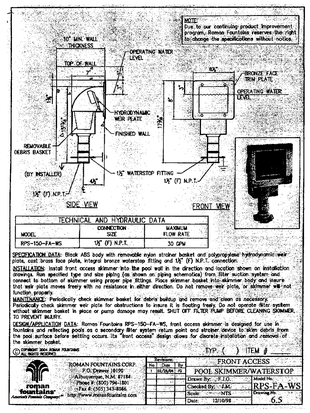

#RPS-FA-WS POND SKIMMER
ROMAN FOUNTAINS CORP.
ALBUQUERQUE, N. M. 87184
ph. (800) 794-1801

H POND SKIMMER
NO SCALE

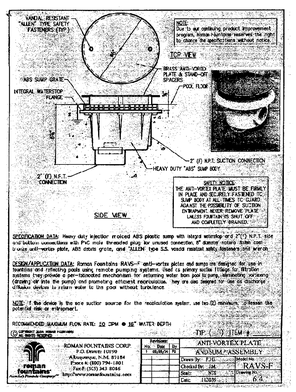

#RAVS-F ANTI-VORTEX PLATE
ROMAN FOUNTAINS CORP.
ALBUQUERQUE, N. M. 87184
ph. (800) 794-1801

J ANTI-VORTEX PLATE
NO SCALE

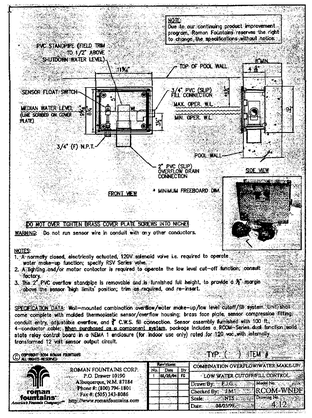

#RCOM-WNDF OVERFLOW/WATER MAKE-UP/ LOW WATER CUT-OFF/WATER FILL
ROMAN FOUNTAINS CORP.
ALBUQUERQUE, N. M. 87184
ph. (800) 794-1801

K OVERFLOW/WATER MAKE-UP/ LOW WATER CUT-OFF/WATER FILL
NO SCALE

#1141-3 THREE TIER TUSCAN FOUNTAIN
BY A. SILVESTRI CO.
149 SO. LINDEN AVENUE
SO. SAN FRANCISCO, CA. 94080
ph. (650) 871-5081

L FOUNTAIN
NO SCALE

M

N

REFERENCE ONLY!

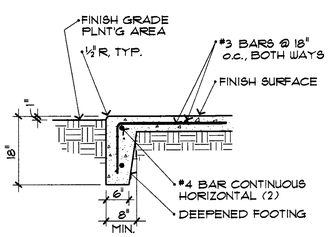

O DEEPENED EDGE @ COURTYARDS
¾" = 1'-0"

REV.	DATE	ISSUED FOR	REV.	DATE	ISSUED FOR
				12-05	PLAN CHECK
				2-06-06	PLAN CH. RESUB.
				3-27-06	BID SET PERMIT SET
				4-17-06	BID SET PERMIT SET

Stamp

CONSTRUCTION DETAILS

L004
OF
0

FRA JOB NO. 2791

PLAN CHECK SUBMITTAL 4-17-06 BID SET 4/17/06 PERMIT SET 4/17/06

\\Fileserver\2700\2791 Fontana City Hall\2791 Detail L-5.dwg, 4/13/2006 2:17:54 PM, HP800.pc3, 0.75:12, gp

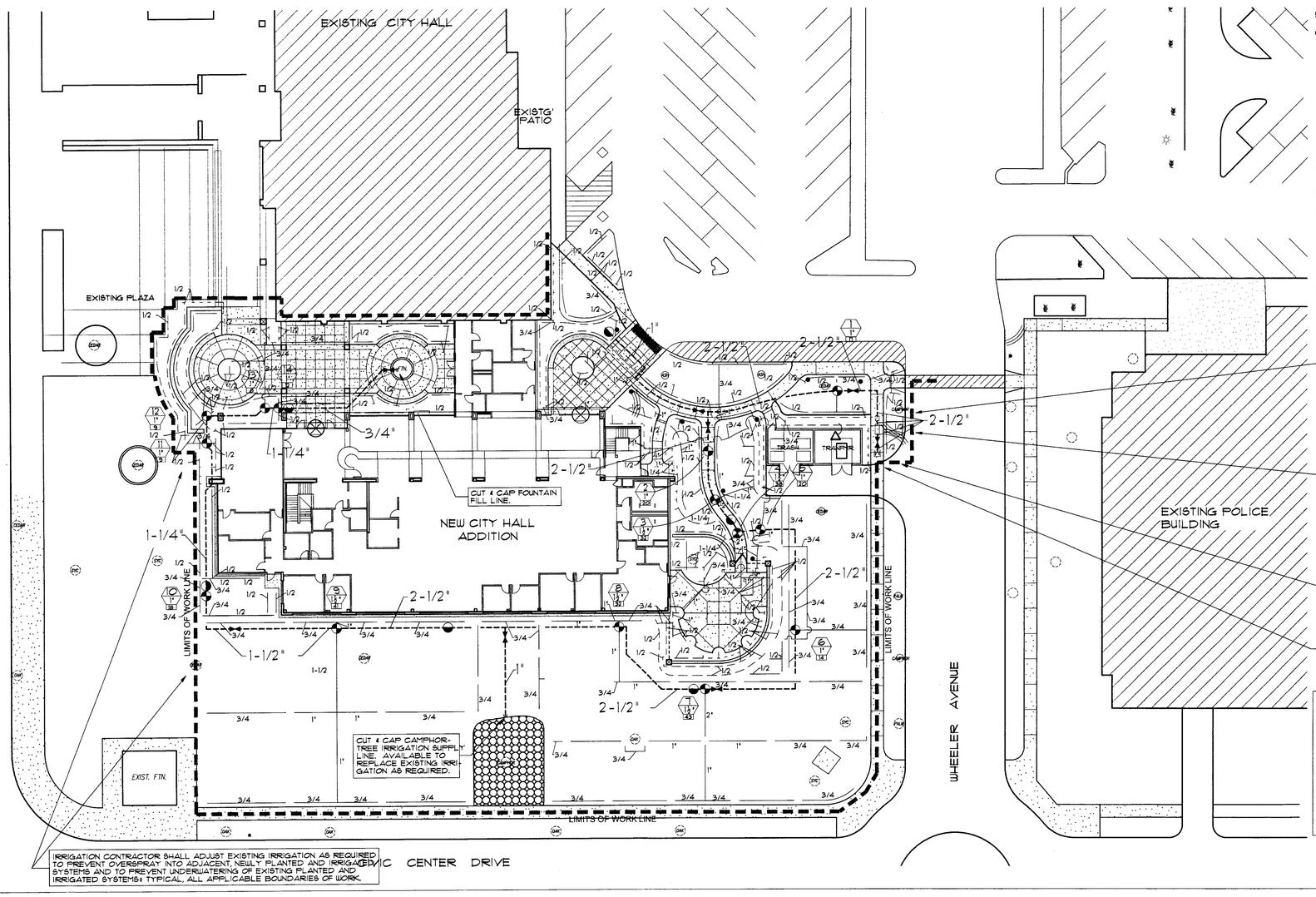

IRRIGATION CONTRACTOR SHALL ADJUST EXISTING IRRIGATION AS REQUIRED TO PREVENT OVERSPRAY INTO ADJACENT, NEWLY PLANTED AND IRRIGATED SYSTEMS AND TO PREVENT UNDERWATERING OF EXISTING PLANTED AND IRRIGATED SYSTEMS: TYPICAL, ALL APPLICABLE BOUNDARIES OF WORK.

1-1/4" PRESSURE REDUCING/MASTER VALVE-SET @ 46 P.S.I. DISCHARGE PRESSURE.

2" REDUCED PRESSURE TYPE BACKFLOW PREVENTER

POINT OF CONNECTION-CONNECT TO 2" WATER METER IN THIS AREA, BY OTHERS, FOR IRRIGATION.
EXISTING WATER PRESSURE: 81 P.S.I.
MINIMUM OPERATING PRESSURE: 70 P.S.I.
PEAK IRRIGATION DEMAND: 43 G.P.M.

RAINBIRD ESP-16MC-SS 16 STATION AUTOMATIC CONTROLLER FACTORY MOUNTED IN A STAINLESS STEEL PEDESTAL ENCLOSURE.

IRRIGATION LEGEND

SYMBOL	MANUFACTURER	MODEL NUMBER	TYPE	PERF.	PSI	RADIUS	DETAIL REF.
	RAINBIRD MPR	1804-5H,Q,VAN	LAUN	2,1,2	30	5'	K
	RAINBIRD MPR	1804-8H,T,Q,VAN,VAN	LAUN	5,4,3,1,5	30	8'	K
	RAINBIRD MPR	1804-12FH,T,Q,VAN,VAN	LAUN	2,6,1,3,9,7,11,4	30	12'	K
	RAINBIRD MPR	1804-15TT,H,T,Q,VAN,VAN	LAUN	2,5,1,9,12,8,16,6	30	15'	K
	RAINBIRD MPR	1804-18H,T,Q,VAN	LAUN	2,6,1,8,13,22	30	18'	K
	RAINBIRD MPR	1806-5H,T,Q,VAN,VAN	SHRUB	2,13,1,4,2	30	5'	K
	RAINBIRD MPR	1806-8H,T,Q,VAN,VAN	SHRUB	5,4,3,1,5	30	8'	K
	RAINBIRD MPR	1806-12FH,T,Q,VAN,VAN	SHRUB	2,6,1,3,9,7,11,4	30	12'	K
	RAINBIRD MPR	1806-15H,T,Q,VAN	SHRUB	19,12,8,16	30	15'	K
	RAINBIRD MPR	1806-18VAN	SHRUB	2,6,1,8,13,1	30	18'	K
	TORO 340	3416-08,07,06,05,04-00-15	LAUN	5,4,2,7,2,4,1,7,2,1,3	35	26'	K
	TORO 8100	8100P-FC,FC-50,45,3020-CCM	LAUN	6,9,3,4,2,9,1,7	35	41'	K
	RAINBIRD BUBB	1804-SCST-B	SHRUB	5	30	3'	K
	RAINBIRD BUBB	1804,FP-4-80/140)	SHRUB	3	30	1'	K

SYMBOL	DESCRIPTION	DETAIL REF.
	IRRITROL #100 'ULTRAFLOW' ELECTRIC CONTROL VALVE - SIZES NOTED	F
	3/4" RAINBIRD #33DRC QUICK COUPLING VALVE W/YELLOW RUBBER COVER	D
	NIBCO T-580 BRASS BALL VALVE - LINE SIZE	E
	2" FEBCO #825YA REDUCED PRESSURE BACKFLOW PREVENTER	A
	1-1/4" GRISWOLD #223OJ PRESSURE REDUCING/MASTER VALVE-SET @ 46 P.S.I. DISCHARGE PRESSURE	C
	RAINBIRD ESP-MC SERIES AUTOMATIC CONTROLLER-FOR MODEL & MOUNTING, SEE DRAWING	H
	PRESSURE MAIN LINE PIPING-FOR 1-1/2" & SMALLER, USE PVC SCH. 40; FOR 2" & LARGER, USE PVC CLASS 315-SIZES NOTED	O
	NON-PRESSURE LATERAL LINE PIPING-USE PVC MINIMUM CLASS 200-SIZES NOTED	O
	MAIN LINE PIPE ENCLOSED WITHIN A PVC SCH. 40 PIPE SLEEVE-SIZE AS REQUIRED	N
	2-1/2" PVC SCH. 40 ELECTRICAL IRRIGATION CONTROL WIRE SLEEVE	N

CONTROLLER STATION
VALVE SIZE
FLOW IN G.P.M.

GENERAL IRRIGATION NOTES:

1. This sprinkler system design is based on the minimum operating pressure shown on the irrigation drawings at each point of connection. The irrigation contractor shall verify water pressure on the site prior to construction. Report any difference between the water pressure indicated on the drawings and the actual pressure reading at the irrigation point of connection to the Landscape Architect and Owner or Developer's Representative.
2. The Developer/Owner will provide required line voltage to the controller location(s). Irrigation contractor shall make final hook-up. Install No. 14 UF minimum direct burial irrigation wire (black pilot, white common). Use epoxy connectors and bury wire with main line, bundled and taped together every ten feet. Form expansion coils at each remote control valve and change of direction. Install schedule 40 PVC sleeves under all paving.
3. All piping between the point of connection and backflow preventer and/or vacuum breakers shall be of materials and installation methods required by the local codes.
4. Irrigation contractor must stop all 'low head' drainage of sprinkler heads with a 'Valcon ADV' check valve installed in the riser or use a 'Seal-A-Matic' pop-up body. Install only as needed after flushing to prevent backdrainage. Adjust to minimum pressure loss.
5. This design is diagrammatic. Equipment shown in paved areas is for design clarification only; actual equipment is to be installed within planted areas wherever possible.
6. Irrigation contractor shall flush all lines and adjust all heads for maximum performance and to prevent overspray onto walks, drives, and buildings as much as possible. This shall include selecting the best degree of arc to fit existing site conditions and throttling the flow control at each valve to obtain the best operating pressure for each system. Install Rainbird PCS screens in the risers of heads as necessary to reduce radii.
7. Do not willfully install the system as designed when it is obvious in the field that unknown obstructions or grade differences exist that were not known during designing. Such conditions shall be brought to the attention of the Landscape Architect and Owner or Developer's representative; otherwise the irrigation contractor must assume full responsibility for any and all necessary revisions.
8. Install all components as called for in specifications and detail drawings.
9. Final location of automatic controller(s) shall be approved by the Owner or Developer's representative prior to installation.
10. It is the responsibility of the irrigation contractor to familiarize himself with all grade differences, locations of walls, walks, mow curbs and turf location edges, etc. He shall coordinate his work with the general contractor and other sub-contractors for the location and installation of pipe sleeves through walls, under roadways, paving, structures, etc.
11. The irrigation contractor shall review the planting plan prior to irrigation installation to familiarize himself with all turf locations. All turf edges shall require 'pop-up heads' regardless of what is shown on the plans.
12. In addition to the control wire sleeves shown on the drawings the irrigation contractor shall be responsible for the installation of control wire sleeves of sufficient size under all paved areas.
13. Sleeving for all pressure/non-pressure lines and wires under hardscape shall be installed prior to paving by the irrigation contractor. Sleeve all piping and wires under pavement a minimum of 24" deep with PVC SCH. 40 pipe sized two times the pipe diameter or wire bundles larger if necessary. Extend sleeves 24" beyond pavement. Sleeves under roadways shall be installed a minimum of 36" deep.
14. In addition to the pop-up sprinkler heads shown on the drawings, the irrigation contractor shall be responsible for installing pop-up heads wherever they occur adjacent to walks, curbs, concrete header and turf edges. Shrub risers adjacent to walks, curbs, concrete headers and/or turf will not be accepted.
15. When radius of spray heads required for proper coverage is more than 25% less than radius shown on the legend, Irrigation Contractor shall install a Rainbird 'PCS' pressure compensation screen for flow and radius reduction. Select screen from PCS nozzle screen selection chart for appropriate radius.

WORST CONDITION PRESSURE LOSS CALCULATION

VALVE NO.----------	7
WATER METER----------	1.4
BACKFLOW PREVENTER----------	12.0
PRESSURE REDUCING/MASTER VALVE--	7.0
BALL VALVE----------	1
REMOTE CONTROL VALVE----------	1.3
MAINLINE----------	1.6
LATERAL LINE----------	3.1
FITTINGS (10% LOSS)----------	3
TOTAL SYSTEM LOSSES----------	26.8
PRESSURE REQUIRED @ HEAD--------	35.0
TOTAL PRESSURE REQUIRED--------	62.0
AVAILABLE STATIC PRESSURE--------	87.0
RESIDUAL WATER PRESSURE--------	25.0

REFERENCE ONLY!

LANGDON WILSON
ARCHITECTURE
PLANNING
INTERIORS
18000 VON KARMAN AVENUE, SUITE 200
IRVINE, CALIFORNIA 92612-157
949 - 833 - 9123

FRANK RADMACHER ASSOCIATES, INC.
Landscape Architects
PHONE (714) 832-1774 FAX (714) 832-5721
14841 Yorba Street, Suite 204 · Tustin, CA 92780
EMAIL: F-R-A@PACBELL.NET

CITY OF FONTANA
CIVIC CENTER
8353 SIERRA AVENUE FONTANA, CALIFORNIA

REV.	DATE	ISSUED FOR	REV.	DATE	ISSUED FOR
				2-06-06	PLAN CHK. RESUBMITT.
				3-27-06	BID SET PERMIT SET
				4-17-06	BID SET PERMIT SET

Stamp
LICENSED LANDSCAPE ARCHITECT
Robert Radmacher
Renewal Date 4/17/06
Date
STATE OF CALIFORNIA

PLAN CHECK SUBMITTAL 2-06-06 BID SET 4/17/06 PERMIT SET 4/17/06

IRRIGATION PLAN
1" = 20'

L005
OF

FRA JOB NO. 2791

\\Iridium\2709\s\2791 Fontana City Hall\2791 20 SCALE IRR REVISED.dwg, 4/13/2006 3:10:37 PM, HP800.pc3, 1:240, gp

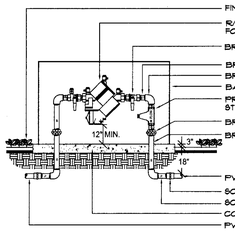

NOTE:
IF WYE STRAINER OR PRESSURE REGULATOR IS SPECIFIED, INSTALL ON EITHER THE HORIZONTAL PIPING OR ON THE DOWNSTREAM LEG AS SPACE PERMITS.

CONCRETE SLAB SHALL BE MINIMUM 4" THICK, 18" WIDE AND EXTEND AT LEAST 8" PAST THE BACKFLOW ASSEMBLY PIPING. IF BACKFLOW ENCLOSURE IS SPECIFIED IN THE LEGEND, THE CONCRETE SLAB SHALL BE THE SIZE REQUIRED BY THE MANUFACTURER.

(A) BACKFLOW DEVICE
N.T.S.

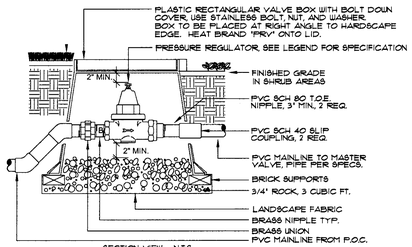

SECTION VIEW - N.T.S.

NOTE:
INSTALL CONTROL VALVES A MIN. 12" APART IN SHRUB AREAS UNLESS OTHERWISE NOTED.

USE 45 DEGREE ELLS TO ACHIEVE MAINLINE DEPTH FROM UPSTREAM SIDE OF THE PRESSURE REGULATOR ASSEMBLY.

(B) PRESSURE REGULATOR
N.T.S.

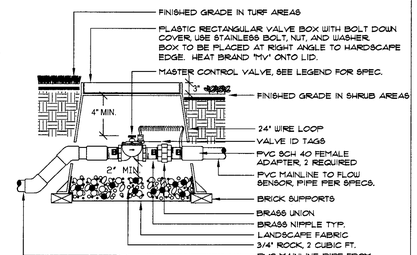

SECTION VIEW - N.T.S.

NOTE:
USE 45 DEGREE ELLS TO ACHIEVE MAINLINE DEPTH FROM UP-STREAM SIDE OF THE MASTER VALVE ASSEMBLY.

(C) MASTER VALVE
N.T.S.

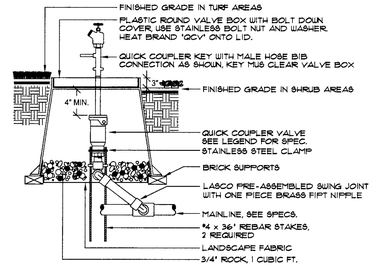

NOTE:
USE TEFLON TAPE ON ALL THREADED FITTINGS TYPICAL.

(D) QUICK COUPLER VALVE
N.T.S.

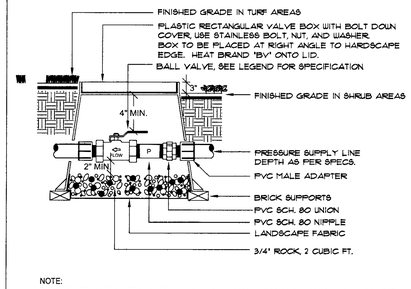

NOTE:
BOX TO BE INSTALLED AS TO ALLOW FOR PROPER OPERATION OF BALL VALVE INSTALL AT RIGHT ANGLE TO HARDSCAPE EDGE, INSTALL VALVE OFF-CENTER IN BOX.

INSTALL VALVE BOX EXTENSIONS AS REQUIRED TO ACHIEVE PROPER VALVE INSTALLATION AT MAIN LINE DEPTH.

(E) BALL VALVE
N.T.S.

LANGDON WILSON
ARCHITECTURE
PLANNING
INTERIORS
18000 VON KARMAN AVENUE, SUITE 200
IRVINE, CALIFORNIA 92612-1017
949 - 833 - 9183

FRANK RADMACHER ASSOCIATES, INC.
Landscape Architects
PHONE (714) 832-1774 FAX (714) 832-5721
14841 Yorba Street, Suite 204 - Tustin, CA 92780
EMAIL: F-R-A@PACBELL.NET

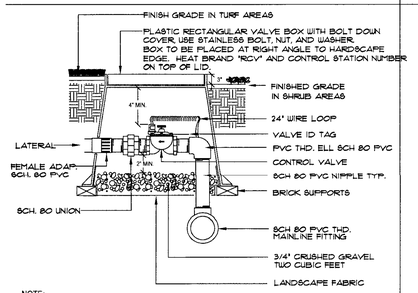

NOTE:
INSTALL SPRINKLER HEADS PLUMB. ADJUST ALL NOZZLES TO PREVENT OVERSPRAY ONTO PAVING, FENCES, WALLS OR BUILDINGS.
INSTALL RAIN BIRD PCS SCREENS AS NECESSARY TO REDUCE RADII.

(F) REMOTE CONTROL VALVE
N.T.S.

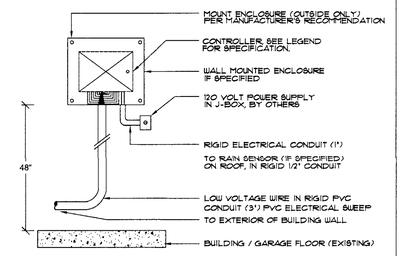

NOTE:
CONTRACTOR SHALL INSTALL ENCLOSURE ONLY IN AN AREA THAT IS APPROVED BY THE OWNER/DEVELOPER'S REPRESENTATIVE

CONTRACTOR SHALL INSTALL A WIRELESS RAIN SENSOR (IF SPECIFIED) ON AN ADJACENT WALL/FENCE AS PER MANUFACTURER'S RECOMMENDATIONS.

(G) WALL MOUNT CONTROLLER
N.T.S.

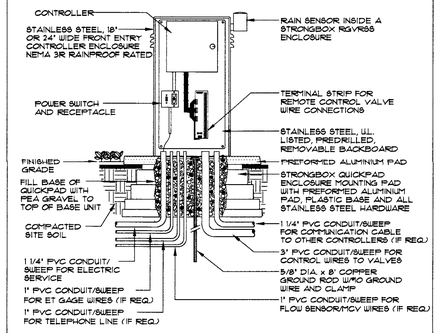

(H) CONTROLLER ENCLOSURE
N.T.S.

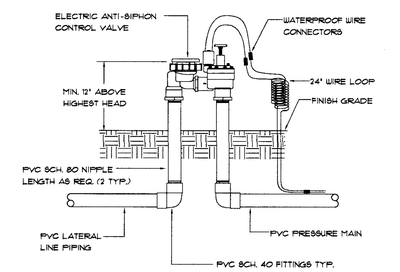

(J) ANTI-SIPHON VALVE
N.T.S.

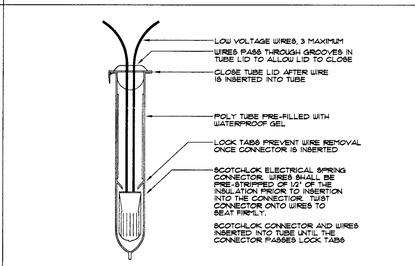

NOTE:
INSTALL SPRINKLER HEADS 6" FROM PAVING EDGE IN GROUND COVER AREAS.
INSTALL SPRINKLER HEADS 4' FROM PAVING EDGE IN TURF AREAS.

INSTALL SPRINKLER HEADS PLUMB. ADJUST ALL NOZZLES TO PREVENT OVERSPRAY ONTO PAVING, FENCES, WALLS OR BUILDINGS.
INSTALL RAIN BIRD PCS SCREENS AS NECESSARY TO REDUCE RADII.
USE TEFLON TAPE ON ALL THREADED CONNECTIONS.

(K) POP-UP SPRINKLER
N.T.S.

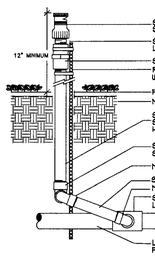

NOTE:
INSTALL SPRINKLER HEADS 12" FROM FENCES WALLS OR BUILDINGS.
DO NOT INSTALL SPRINKLER HEAD WITHIN 5 FEET OF PAVING, CURBS OR TURF EDGES.
INSTALL SPRINKLER HEADS PLUMB. ADJUST ALL NOZZLES TO PREVENT OVERSPRAY ONTO PAVING, FENCES, WALLS OR BUILDINGS.
INSTALL RAIN BIRD PCS SCREENS AS NECESSARY TO REDUCE RADII.
USE TEFLON TAPE ON ALL THREADED CONNECTIONS.

(L) SPRAY HEAD ON RISER
N.T.S.

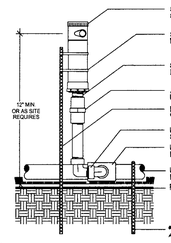

NOTE:
ALL PIPE INSTALLED ON GRADE TO BE SCH 40 ULTRA-VIOLET RESISTANT PVC.
SPRINKLER HEAD ASSEMBLY TO BE INSTALLED PLUMB.
DO NOT INSTALL SPRINKLER HEAD ASSEMBLY ADJACENT TO SIDEWALKS, CURBS, DRIVEWAYS OR PEDESTRIAN AREAS.
USE TEFLON TAPE ON ALL THREADED CONNECTIONS - TYPICAL.

(M) SPRAY HEAD ON GRADE
N.T.S.

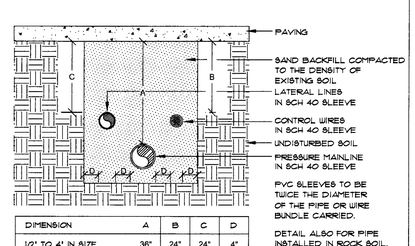

DIMENSION	A	B	C	D
1/2" TO 4" IN SIZE	36"	24"	24"	4"

(N) SLEEVE INSTALLATION
N.T.S.

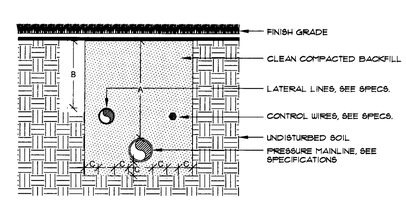

DIMENSION	A	B	C
1/2" TO 2-1/2" IN SIZE	18"	12"	4"
3" TO 6" IN SIZE	24"	X	4"

(O) PIPE INSTALLATION
N.T.S.

NOTE:
WIRE CONNECTOR SHALL BE A 3M DBY DIRECT BURY SPLICE KIT.
KIT SHALL INCLUDE A SCOTCHLOK Y SPRING CONNECTOR, A POLYPROPYLENE TUBE AND A WATERPROOF SEALING GEL. TUBE SHALL BE SUPPLIED PREFILLED WITH GEL.
DIRECT BURY SPLICE KIT SHALL BE USED TO ELECTRICALLY CONNECT 2 - 3 #4 PRE-STRIPPED COPPER WIRES. LARGER WIRES OR GREATER QUANTITES OF WIRES SHALL REQUIRE A LARGER APPROVED WIRE CONNECTION.

(P) WIRE CONNECTION
N.T.S.

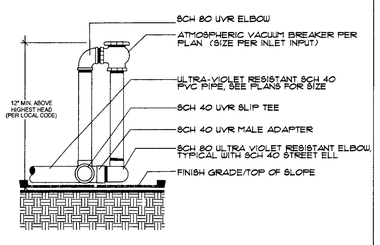

NOTE:
ALL PIPE INSTALLED ON GRADE TO BE SCH 40 ULTRA-VIOLET RESISTANT PVC.
USE TEFLON TAPE ON ALL THREADED CONNECTIONS - TYPICAL.

(Q) ATMOSPHERIC VACUUM BREAKER

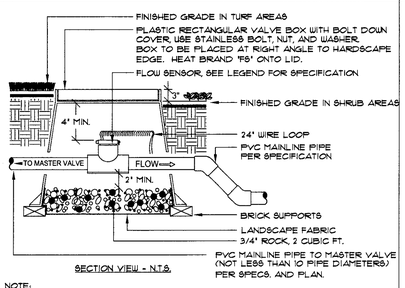

SECTION VIEW - N.T.S.

NOTE:
INSTALL FLOW SENSOR AS PER THE MANUFACTURER'S RECOMMENDATIONS, WIRE TO IRRIGATION CONTROLLER.
USE 45 DEGREE ELLS TO ACHIEVE MAINLINE DEPTH ON THE DOWN-STREAM SIDE OF THE FLOW SENSOR.

(R) FLOW SENSOR

CITY OF FONTANA
CIVIC CENTER
8353 SIERRA AVENUE FONTANA, CALIFORNIA

REV.	DATE	ISSUED FOR	REV.	DATE	ISSUED FOR
				2-06-06	PLAN CHK. RESUB.
				3-27-06	BID SET
					PERMIT SET
				4-17-06	BID SET
					PERMIT SET

Stamp

LICENSED LANDSCAPE ARCHITECT
3/31/06
Registered Prof.
Date
STATE OF CALIFORNIA

REFERENCE ONLY!

IRRIGATION DETAILS
1" = 20'

L006

OF

\\Iridium\27003\2791 Fontana City Hall\Irrig details.dwg, 4/13/2006 3:08:10 PM, HP800.pc3, 1:20(3.258, gp

IRRIGATION SPECIFICATIONS

I. SCOPE OF WORK

THE WORK INCLUDED IN THESE SPECIFICATIONS SHALL CONSIST OF THE FURNISHING OF ALL LABOR, TOOLS, MACHINERY, MATERIALS, APPLIANCES, AND PROCESSES REQUIRED FOR THE INSTALLATION OF A COMPLETE LANDSCAPE IRRIGATION SYSTEM HEREIN SPECIFIED AND SHOWN ON THE ACCOMPANYING DRAWING(S).

II. GENERAL REQUIREMENTS

(A) INTENT – THE INTENT OF THE DRAWINGS AND SPECIFICATIONS IS TO INDICATE AND SPECIFY A COMPLETE AND EFFICIENT SPRINKLER IRRIGATION SYSTEM READY FOR USE IN ACCORDANCE WITH THE MANUFACTURER'S RECOMMENDATIONS; AND, MEETING THE APPROVAL OF THE CITY INSPECTOR WITHOUT FURTHER COST OF LABOR AND MATERIAL TO THE DEVELOPER/OWNER.

(B) VERIFICATION OF DIMENSIONS – ALL PLOT DIMENSIONS ARE APPROXIMATE. BEFORE PROCEEDING WITH ANY WORK, THE CONTRACTOR SHALL CAREFULLY CHECK AND VERIFY ALL DIMENSIONS AND SHALL REPORT ANY VARIATIONS TO THE LANDSCAPE ARCHITECT.

(C) EXPLANATION OF DRAWINGS – DUE TO THE SCALE OF DRAWINGS, IT IS NOT POSSIBLE TO INDICATE ALL OFFSETS, FITTINGS, SLEEVES, ETC. WHICH MAY BE REQUIRED. THE CONTRACTOR SHALL CAREFULLY INVESTIGATE THE STRUCTURAL AND FINISHED CONDITIONS AFFECTING ALL OF HIS WORK AND PLAN HIS WORK ACCORDINGLY, FURNISHING SUCH FITTINGS, ETC. AS MAY BE REQUIRED TO MEET SUCH CONDITIONS. DRAWINGS ARE GENERALLY DIAGRAMMATIC AND INDICATIVE OF THE WORK TO BE INSTALLED. THE WORK SHALL BE INSTALLED IN SUCH A MANNER AS TO AVOID CONFLICTS BETWEEN IRRIGATION SYSTEMS, PLANTING AND ARCHITECTURAL FEATURES.

1) ALL WORK CALLED FOR ON THE DRAWINGS BY NOTES OR DETAILS SHALL BE FURNISHED AND INSTALLED WHETHER OR NOT SPECIFICALLY MENTIONED IN THE SPECIFICATIONS.

(D) SITE CONDITIONS – THE CONTRACTOR SHALL NOT WILLFULLY INSTALL THE IRRIGATION SYSTEM AS SHOWN ON THE DRAWINGS WHEN IT IS OBVIOUS IN THE FIELD THAT UNKNOWN OBSTRUCTIONS, GRADE DIFFERENCES OR DISCREPANCIES IN AREA DIMENSIONS EXIST THAT MIGHT NOT HAVE BEEN CONSIDERED IN ENGINEERING. SUCH OBSTRUCTIONS OR DIFFERENCES SHOULD BE BROUGHT TO THE ATTENTION OF THE LANDSCAPE ARCHITECT. IN THE EVENT THIS NOTIFICATION IS NOT PERFORMED, THE IRRIGATION CONTRACTOR SHALL ASSUME FULL RESPONSIBILITY FOR ANY REVISION NECESSARY.

(E) PERMITS AND FEES – THE CONTRACTOR SHALL OBTAIN AND PAY FOR ANY AND ALL PERMITS AND ALL INSPECTIONS AS REQUIRED.

(F) MANUFACTURER'S DIRECTIONS – MANUFACTURER'S DIRECTIONS AND DETAILED DRAWINGS SHALL BE FOLLOWED IN ALL CASES WHERE THE MANUFACTURERS OF ARTICLES USED IN THIS CONTRACT FURNISH DIRECTIONS COVERING POINTS NOT SHOWN IN THE DRAWINGS AND SPECIFICATIONS.

(G) ORDINANCES AND REGULATIONS – ALL LOCAL, MUNICIPAL AND STATE LAWS, AND RULES AND REGULATIONS GOVERNING OR RELATING TO ANY PORTION OF THIS WORK ARE HEREBY INCORPORATED INTO AND MADE A PART OF THESE SPECIFICATIONS, AND THEIR PROVISIONS SHALL BE CARRIED OUT BY THE CONTRACTOR. ANYTHING CONTAINED IN THESE SPECIFICATIONS SHALL NOT BE CONSTRUED TO CONFLICT WITH ANY OF THE ABOVE RULES AND REGULATIONS OR REQUIREMENTS OF THE SAME. HOWEVER, WHEN THESE SPECIFICATIONS AND DRAWINGS CALL FOR OR DESCRIBE MATERIALS, WORKMANSHIP, OR CONSTRUCTION OF A BETTER QUALITY, HIGHER STANDARD, OR LARGER SIZE THAN IS REQUIRED BY THE ABOVE RULES AND REGULATIONS, THE PROVISIONS OF THESE SPECIFICATIONS AND DRAWINGS SHALL TAKE PRECEDENCE.

(H) DISRUPTION OF SERVICES – PERMISSION TO SHUT OFF ANY WATER LINES MUST BE OBTAINED FROM THE OWNER/DEVEOPER, WHO WILL MAKE THE NECESSARY ARRANGEMENTS. DISRUPTION OF EXISTING SYSTEMS SHALL BE KEPT TO A MINIMUM.

(I) SOURCE OF WATER SUPPLY – THE CONTRACTOR SHALL VERIFY AND BE FAMILIAR WITH THE LOCATION, SIZE AND DETAIL OF STUBOUTS, PROVIDED AS THE SOURCE OF WATER SUPPLY TO THE SPRINKLER SYSTEM, AS SHOWN ON PLANS.

(J) EXISTING UTILITIES AND CONDITIONS – PRIOR TO CUTTING INTO THE SOIL, THE CONTRACTOR SHALL LOCATE ALL CABLES, CONDUITS, SEWERS, SEPTIC TANKS AND OTHER SUCH UTILITIES AS ARE COMMONLY ENCOUNTERED UNDERGROUND AND HE SHALL TAKE PROPER PRECAUTIONS NOT TO DAMAGE OR DISTURB SUCH IMPROVEMENTS. IF A CONFLICT EXISTS BETWEEN SUCH OBSTACLES AND THE PROPOSED WORK THE CONTRACTOR SHALL PROMPTLY NOTIFY THE OWNER INSPECTOR WHO WILL ARRANGE FOR RELOCATIONS. THE CONTRACTOR WILL PROCEED IN THE SAME MANNER IF ROCK LAYER OR ANY OTHER CONDITION ENCOUNTERED UNDERGROUND MAKES CHANGES ADVISABLE.

WHERE INVESTIGATION OF SUBSURFACE CONDITIONS HAVE BEEN MADE BY A QUALIFIED BODY IN AREAS WHERE WORK IS WORK IS TO BE PERFORMED OR IN IN WHICH LOCAL MATERIALS MAY BE OBTAINED, LOCAL MATERIALS MAY BE OBTAINED, CONTRACTOR MAY REQUEST THE USE OF SUCH INFORMATION BUT WILL BE DIRECTLY RESPONSIBLE FOR ITS VERIFICATION AND ACCURACY.

(K) VERIFICATION OF FINISH GRADE – THE CONTRACTOR SHALL VERIFY THE CORRECTNESS OF ALL FINISH GRADES WITHIN THE WORK AREA IN ORDER TO INSURE THE PROPER SOIL COVERAGE (AS SPECIFIED) OF THE SPRINKLER SYSTEM PIPES.

III. SUBMITTALS

(A) MATERIAL LIST:

1) THE CONTRACTOR SHALL FURNISH THE ARTICLES, EQUIPMENT, MATERIALS OR PROCESSES SPECIFIED BY NAME IN THE DRAWINGS AND SPECIFICATIONS. NO SUBSTITUTION WILL BE ALLOWED WITHOUT PRIOR WRITTEN APPROVAL BY THE LANDSCAPE ARCHITECT OR CITY LANDSCAPE ARCHITECT.

2) COMPLETE MATERIAL LIST SHALL BE SUBMITTED PRIOR TO PERFORMING ANY WORK. MATERIAL LIST SHALL INCLUDE THE MANUFACTURER, MODEL NUMBER AND DESCRIPTION OF ALL MATERIALS AND EQUIPMENT TO BE USED.

3) EQUIPMENT OR MATERIALS INSTALLED THAT ARE NOT PER THE APPROVED PLANS MAY BE REJECTED BY THE LANDSCAPE ARCHITECT OR CITY LANDSCAPE INSPECTOR AND THE CONTRACTOR WILL BE REQUIRED TO REMOVE SUCH MATERIALS FROM THE SITE AT HIS OWN EXPENSE.

4) APPROVAL OF ANY ITEM, ALTERNATE OR SUBSTITUTE INDICATES ONLY THAT THE PRODUCT OR PRODUCTS APPARENTLY MEET THE REQUIREMENTS OF THE DRAWINGS AND SPECIFICATIONS ON THE BASIS OF THE INFORMATION OR SAMPLES SUBMITTED.

5) MANUFACTURER'S WARRANTIES SHALL NOT RELIEVE THE CONTRACTOR OF HIS LIABILITY UNDER THE GUARANTEE. SUCH WARRANTIES SHALL ONLY SUPPLEMENT THE GUARANTEE.

IV. INSTALLATION

(A) STANDARD OF INSTALLATION – MATERIAL AND WORKMANSHIP SHALL BE IN ACCORDANCE WITH LOCAL CODES AND ORDINANCES OF LEGALLY CONSTITUTED AUTHORITIES, EXCEPT WHERE PROVISIONS OF THESE SPECIFICATIONS EXCEED SUCH REQUIREMENT, THESE SPECIFICATIONS SHALL GOVERN.

(B) EXCAVATIONS:

1) EXCAVATIONS SHALL BE OPEN VERTICAL CONSTRUCTION SUFFICIENTLY WIDE TO PROVIDE FREE WORKING SPACE AROUND THE WORK INSTALLED AND TO PROVIDE AMPLE SPACE FOR BACKFILLING AND TAMPING.

2) TRENCHES FOR PIPE SHALL BE CUT TO REQUIRED GRADE LINES, AND COMPACTED TO PROVIDE AN ACCURATE GRADE AND UNIFORM BEARING FOR THE FULL LENGTH OF THE LINE.

3) WHEN TWO PIPES ARE TO BE PLACED IN THE SAME TRENCH IT IS REQUIRED TO MAINTAIN A 6-INCH SPACE BETWEEN PIPES AS A MINIMUM.

4) DEPTH OF TRENCHES SHALL BE SUFFICIENT TO PROVIDE A MINIMUM COVER ABOVE THE TOP OF THE PIPE AS FOLLOWS:

a) 24 INCH OVER MAIN LINE (2" OR LARGER)
b) 18 INCH OVER MAIN LINE (1 1/2" OR SMALLER)
c) 12 INCH OVER NON-PRESSURE LATERAL LINES
d) ALL SLEEVED MAINLINES AT STREET CROSSINGS SHALL BE INSTALLED WITH A MINIMUM COVER DEPTH OF 24" TO TOP OF SLEEVE.

5) WHERE IT IS NECESSARY TO EXCAVATE ADJACENT TO EXISTING TREES, THE CONTRACTOR SHALL USE ALL POSSIBLE CARE TO AVOID INJURY TO TREES AND TREE ROOTS. EXCAVATION IN AREAS WHERE TWO (2) INCH AND LARGER ROOTS OCCUR SHALL BE DONE BY HAND. ALL ROOTS TWO (2) INCHES AND LARGER IN DIAMETER, EXCEPT DIRECTLY IN THE PATH OF PIPE OR CONDUIT, SHALL BE TUNNELED UNDER AND SHALL BE HEAVILY WRAPPED WITH BURLAP, TO PREVENT SCARRING OR EXCESSIVE DRYING. WHERE A DITCHING MACHINE IS RUN CLOSE TO TREES HAVING ROOTS SMALLER THAN TWO (2) INCHES IN DIAMETER, THE WALL OF THE TRENCH ADJACENT TO THE TREE SHALL BE HAND TRIMMED, MAKING CLEAN CUTS THROUGH ROOTS ONE (1) INCH AND LARGER IN DIAMETER. CUTS SHALL BE PAINTED WITH TWO COATS OF TREE SEAL, OR EQUAL. TRENCHES ADJACENT TO TREES SHOULD BE CLOSED WITHIN TWENTY-FOUR (24) HOURS. WHEN THIS IS NOT POSSIBLE THE SIDE OF THE TRENCH ADJACENT TO THE TREE SHALL BE KEPT SHADED WITH BURLAP OR CANVAS.

6) PRESSURE MAIN SUPPLY LINES 1 1/2 INCHES OR SMALLER SHALL BE SCHEDULE 40 PVC PIPE, AND CLASS 315 PVC PIPE FOR 2 INCHES OR LARGER. ALL LATERAL LINES SHALL BE PVC PIPE AS NOTED ON PLAN.

7) ALL IRRIGATION LINES UNDER PAVING SHALL BE SLEEVED IN SCHEDULE 40 PVC PIPE FOR 1 1/2 INCHES OR SMALLER, AND CLASS 315 PVC PIPE FOR 2 INCHES OR LARGER. SLEEVES SHALL BE AT LEAST TWICE THE DIAMETER OF THE PIPE OR WIRE BUNDLE TO BE ENCLOSED, WITH A MINIMUM TWO INCH SIZE.

8) ALL PVC IRRIGATION LINES SHALL BE INSTALLED IN TRENCHES WITH NOMENCLATURE LETTERING FACING UP.

(5) PIPING ON SLOPES

1) ALL PIPING ON SLOPE FACE OR AT TOP OF SLOPE SHALL BE SCH. 40 " BROWNLINE" AND SHALL BE SECURED ON THE SURFACE EVERY 10 ' O.C. MINIMUM AS INDICATED ON DETAIL.

2) PIPE WHICH CROSSES CONCRETE DRAIN BENCHES SHALL BE PLACED OVER THE SURFACE THRU A GALVANIZED PIPE SIZED 2 TIMES THE DIAMETER OF THE BROWNLINE PIPE.

(D) JOINING OF PIPE – THE CONTRACTOR IS RESPONSIBLE TO BE FAMILIAR WITH ANY AND ALL METHODS OF ASSEMBLING, JOINING AND INSTALLATION OF THE VARIOUS TYPES OF PIPE TO BE USED. HE WILL ADHERE IN STRICT ACCORDANCE WITH MANUFACTURER'S RECOMMENDED GUIDE. IF DURING ANY PHASE OF THE WORK THE OWNER'S REPRESENTATIVE FINDS THAT THE CONTRACTOR OR ANY OF HIS WORKMEN ARE NOT FAMILIAR WITH THE RECOMMENDED PROCEDURES, THE CONTRACTOR SHALL ARRANGE WITH MANUFACTURER OF THE PARTICULAR PRODUCT FOR THE SERVICES OF A QUALIFIED MANUFACTURER'S REPRESENTATIVE TO INSTRUCT WORKMEN IN THE PROPER RECOMMENDED PROCEDURES.

(E) FLUSHING OF SYSTEM:

1) AFTER ALL NEW SPRINKLER PIPE LINES AND RISERS ARE IN PLACE AND CONNECTED, ALL NECESSARY DIVERSION WORK HAS BEEN COMPLETED, AND PRIOR TO INSTALLATION OF SPRINKLER HEADS, THE CONTROL VALVES SHALL BE OPENED AND A FULL HEAD OF WATER USED TO FLUSH OUT THE SYSTEM.

2) SPRINKLER HEADS SHALL BE INSTALLED ONLY AFTER FLUSHING OF THE SYSTEM HAS BEEN ACCOMPLISHED TO THE COMPLETE SATISFACTION OF THE CITY INSPECTOR.

(F) PRESSURE TEST:

1) ALL PRESSURE LINES SHALL BE TESTED UNDER HYDROSTATIC PRESSURE OF 150 POUNDS PER SQUARE INCH, AND ALL NON-PRESSURE LINES SHALL BE TESTED UNDER THE EXISTING STATIC PRESSURE AND BOTH BE PROVEN WATERTIGHT. CONTRACTOR SHALL PROVIDE ALL EQUIPMENT FOR HYDROSTATIC TESTS.

NOTE: TESTING OF PRESSURE SUPPLY LINES SHALL BE DONE PRIOR TO INSTALLATION OF ELECTRIC CONTROL VALVES.

2) PRESSURE SHALL BE SUSTAINED IN THE LINES FOR NOT LESS THAN THREE (3) HOURS. IF LEAKS DEVELOP, THE JOINTS SHALL BE REPLACED AND THE TEST REPEATED UNTIL THE ENTIRE SYSTEM IS PROVED WATERTIGHT.

3) TESTS SHALL BE OBSERVED AND APPROVED BY THE CITY LANDSCAPE INSPECTOR PRIOR TO BACKFILL.

4) UPON COMPLETION OF EACH PHASE OF THE WORK, THE CONTRACTOR SHALL CHECK AND ADJUST EACH SPRINKLER HEAD TO MEET THE SITE REQUIREMENTS AND PLAN.

(G) BACKFILLING:

1) BACKFILL SHALL NOT BE PLACED UNTIL THE INSTALLED SPRINKLER IRRIGATION SYSTEM HAS BEEN INSPECTED AND APPROVED THE CITY LANDSCAPE INSPECTOR.

2) BACKFILL MATERIAL SHALL BE APPROVED SOIL. UNSUITABLE MATERIAL, INCLUDING CLODS AND ROCKS OVER 2 1/2 INCHES IN SIZE, SHALL BE REMOVED FROM THE PREMISES AND DISPOSED OF LEGALLY AT NO COST TO THE DEVELOPER.

3) ALL BACKFILLING SHALL BE DONE CAREFULLY AND SHALL BE PROPERLY TAMPED. SANDY SOIL ONLY SHALL BE TAMPED AND PUDDLED TO ELIMINATE ANY VOIDS.

4) SURPLUS EARTH REMAINING AFTER BACKFILLING SHALL BE DISPOSED AS DIRECTED BY THE ON-SITE SUPERINTENDANT.

5) WHERE EXCAVATING OR "JACKING" IS REQUIRED UNDER ASPHALT PAVEMENT, SIDEWALKS, ROADS, ETC. CARE SHALL BE TAKEN IN BACKFILLING WITH SAND, TAMPING AND INUNDATING WITH WATER.

6) SAND BACKFILL, WHERE REQUIRED SHALL BE PER DETAIL(S) ON PLAN.

(H) TEMPORARY REPAIRS – THE DEVELOPER RESERVES THE RIGHT TO MAKE TEMPORARY REPAIRS AS NECESSARY TO KEEP THE SPRINKLER SYSTEM EQUIPMENT IN OPERATING CONDITION. THE EXERCISE OF THIS RIGHT BY THE DEVELOPER SHALL NOT RELIEVE THE CONTRACTOR OF HIS RESPONSIBILITIES UNDER THE TERMS OF THE GUARANTEE AS HEREIN SPECIFIED.

(I) SPRINKLERS:

1) ALL NOZZLES ON SPRINKLERS SHALL BE TIGHTENED AFTER INSTALLATION. ALL SPRINKLERS HAVING AN ADJUSTMENT STEM SHALL BE ADJUSTED ON A LATERAL LINE FOR THE PROPER RADIUS, DIAMETER AND/OR GALLONAGE.

2) ALL SPRINKLER HEADS SHALL BE SET PERPENDICULAR TO FINISHED GRADES UNLESS OTHERWISE DESIGNATED ON PLANS.

3) ALL SPRINKLER RISERS SHALL BE INSTALLED AS INDICATED ON PLANS AND SHOWN ON DETAILS.

(J) VALVES:

1) PIPING SYSTEMS SHALL BE SUPPLIED WITH VALVES AT ALL POINTS SHOWN ON THE DRAWINGS OR SPECIFIED HEREIN, ARRANGED TO GIVE COMPLETE REGULATING CONTROL THROUGHOUT.

2) VALVES SHALL BE THE FULL SIZE OF THE LINE IN WHICH THEY ARE INSTALLED UNLESS OTHERWISE INDICATED.

3) CONTROL VALVES SHALL BE ADJUSTED SO THE MOST REMOTE SPRINKLER HEADS OPERATE AT THE PRESSURE RECOMMENDED BY THE HEAD MANUFACTURER. CONTROL VALVES SHALL BE ADJUSTED SO A UNIFORM DISTRIBUTION OF WATER IS APPLIED BY THE SPRINKLER HEADS TO THE PLANTING AREAS FOR EACH INDIVIDUAL VALVE SYSTEM.

4) QUICK COUPLING VALVES SO INDICATED TO BE INSTALLED ADJACENT TO WALKS, CURBS, ETC., SHALL BE WITHIN A TWELVE (12) INCH MAXIMUM OF SAME. ALL QUICK COUPLING VALVES SHALL BE INSTALLED BELOW GRADE IN ROUND PLASTIC VALVE BOX (PER DETAIL) WITH LOCKING COVER.

(K) VALVE BOXES:

1) PLASTIC VALVE BOXES (AMATEK OR APPROVED EQUAL) SHALL BE INSTALLED TWO (2) INCHES ABOVE FINISH GRADE. ONLY ONE (1) REMOTE CONTROL VALVE MAY BE INSTALLED IN EACH BOX.

2) VALVE BOXES LOCATED NEAR WALKS, CURBS AND PAVING SHALL BE INSTALLED IN SUCH A WAY AS TO ALLOW FOR VALVE BOXES TO ABUT THOSE ITEMS WITH TOP SURFACE MATCHING PLANE AS ITEMS LISTED ABOVE.

3) ALL VALVE BOXES WILL BE MARKED WITH TWO INCH (2") HIGH BRANDED LETTERS INDICATING THE STATION NUMBER.

(L) AUTOMATIC CONTROLLER LOCATION AND INSTALLATION:

1) AUTOMATIC CONTROLLERS SHALL BE INSTALLED AT LOCATIONS SHOWN ON THE PLANS. ALL PEDESTAL TYPE CONTROLLERS SHALL BE MOUNTED AN "APPROVED" CONCRETE BASE.

2) ALL CONTROLLER LOCATIONS ARE SHOWN DIAGRAMMATIC, AND SHALL BE SPECIFICALLY LOCATED BY THE OWNER'S REPRESENTATIVE AND APPROVED BY THE CITY INSPECTOR.

3) ALL LOCAL AND APPLICABLE CODES SHALL TAKE PRECEDENCE IN THE FURNISHING AND/OR CONNECTING A 110 VOLT ELECTRICAL SERVICE TO THE CONTROLLER. THIS SERVICE WILL BE PROVIDED BY THE DEVELOPER.

4) PROVIDE AN ON/OFF ELECTRICAL POWER SWITCH FOR EVERY IRRIGATION CONTROLLER AT EACH CONTROLLER ENCLOSURE.

(M) CONTROLLER WIRING – ALL ELECTRICAL EQUIPMENT AND WIRING SHALL COMPLY WITH LOCAL AND STATE CODES AND BE INSTALLED BY THOSE SKILLED AND LICENSED IN THE TRADE. UNLESS THE GOVERNING CODE SPECIFIES OTHERWISE, LOW VOLTAGE (14 GAGE MIN.) CONTROL WIRE MAY BE INSTALLED BY THE CONTRACTOR WHEN CODE ALLOWS.

1) PILOT WIRES (MIN. 14 GAGE) SHALL BE A DIFFERENT COLOR FOR EACH AUTOMATIC CONTROLLER, I.E., CONTROLLER "A", BLACK, CONTROLLER "B", RED, ETC. PROVIDE TWO (2) ADDITIONAL PILOT WIRES (ORANGE COLOR) FOR EACH CONTROLLER. COMMON WIRES SHALL BE WHITE FOR EACH CONTROLLER.

2) AN EXPANSION CURL SHALL BE PROVIDED WITHIN THREE FEET (3') FOR EACH WIRE CONNECTION AND AT EACH CHANGE IN DIRECTION, AND PROVIDED EVERY 100 FEET ON RUNS OF MORE THAN 100 FEET IN LENGTH. EXPANSION CURLS SHALL BE FORMED BY WRAPPING AT LEAST FIVE (5) TURNS OF WIRE AROUND A ONE INCH (1") DIAMETER PIPE, THEN WITHDRAWING THE PIPE.

(N) COVERAGE TEST – WHEN THE SPRINKLER SYSTEM IS COMPLETED, THE CONTRACTOR, IN THE PRESENCE OF THE CITY INSPECTOR, SHALL PERFORM A TEST COVERAGE OF WATER AFFORDED THE PLANTING AREAS, COMPLETE AND ADEQUATE. THE CONTRACTOR SHALL FURNISH ALL MATERIALS AND PERFORM ALL WORK REQUIRED TO CORRECT ANY INADEQUACIES OF COVERAGE DISCLOSED. CONTRACTOR SHALL INFORM THE CITY INSPECTOR OF ANY DEVIATION FROM THE PLAN REQUIRED DUE TO WIND, PLANTING, SOIL OR SITE CONDITIONS, THAT BEAR ON PROPER COVERAGE.

(O) INSPECTION OF WORK:

1) INSTALLATION AND OPERATIONS MUST BE APPROVED APPROVED BY THE OWNER OR LANDSCAPE ARCHITECT, WITH FINAL APPROVAL BY THE CITY OR CITY LANDSCAPE INSPECTOR.

2) PRIOR TO COMMENCING WORK THE CONTRACTOR SHALL ARRANGE A MEETING WITH THE LANDSCAPE ARCH., AT WHICH TIME THE CONTRACTOR WILL BE INFORMED OF THE SPECIFIC INSPECTIONS REQUIRED AND THE AND THE METHOD OF CALLING FOR FOR SUCH INSPECTIONS AS THE INDIVIDUAL WORK IS COMPLETED.

3) IN NO EVENT SHALL THE CONTRACTOR COVER COVER UP ORE OTHERWISE REMOVE FROM VIEW ANY WORK UNDER THIS CONTRACT WITHOUT PRIOR APPROVAL OF THE LANDSCAPE ARCHITECT. ANY WORK COVERED PRIOR TO INSPECTION SHALL BE OPENED TO VIEW AT THE CONTRACTOR'S EXPENSE.

4) IN THE EVENT THE CONTRACTOR REQUESTS INSPECTIONS OF WORK AND SAID WORK IS INCOMPLETE, THE CONTRACTOR SHALL BE RESPONSIBLE FOR INSPECTION COSTS.

(P) COMPLETION – THE WORK WILL BE ACCEPTED IN WRITING WHEN THE WHOLE CONTRACT SHALL HAVE BEEN COMPLETED SATISFACTORILY TO THE CITY INSPECTOR. IN JUDGING THE WORK, NO ALLOWANCE FOR DEVIATION FROM THE ORIGINAL PLANS AND SPECIFICATIONS WILL BE MADE UNLESS ALREADY APPROVED IN WRITING AT PROPER TIMES.
SHOULD IT BECOME NECESSARY, DUE TO DEVELOPED CONDITIONS, TO OCCUPY ANY POSITION OF THE WORK BEFORE THE CONTRACT IS FULLY COMPLETED, SUCH OCCUPANCY SHALL NOT CONSTITUTE ACCEPTANCE.

(Q) INSTRUCTION – AFTER THE SYSTEM HAS BEEN COMPLETED, THE CONTRACTOR SHALL INSTRUCT THE CITY INSPECTOR IN THE OPERATION AND MAINTENANCE OF THE SYSTEM AND SHALL FURNISH A COMPLETE SET OF OPERATING INSTRUCTIONS.

(R) GENERAL INSTALLATION – ANY EQUIPMENT INSTALLED BY THE CONTRACTOR AND DEEMED TO BE FOR THE USE OF THE CITY IN VARIOUS SITUATIONS (I.E., GATE VALVES, CONTROL VALVES, ETC.) SHALL BE SO INSTALLED TO BE READILY ACCESSIBLE AND QUICKLY OPERABLE BY THE CITY. EQUIPMENT DEEMED BY THE CITY INSPECTOR TO BE INOPERABLE FOR ITS INTENDED PURPOSE SHALL BE REINSTALLED BY THE CONTRACTOR IN AN OPERABLE POSITION BEFORE APPROVAL WILL BE GIVEN.

(S) CLEAN-UP – CLEAN-UP SHALL BE MADE AS EACH PORTION OF WORK PROGRESSES. REFUSE AND EXCESS DIRT SHALL BE REMOVED FROM THE SITE, ALL WALKS AND PAVING SHALL BE BROOMED OR WASHED DOWN, AND ANY DAMAGE SUSTAINED ON THE WORK OF OTHERS SHALL BE REPAIRED TO ORIGINAL CONDITIONS.

(T) GUARANTEE – THE ENTIRE SPRINKLER SYSTEM SHALL BE GUARANTEED BY THE CONTRACTOR AS TO MATERIAL AND WORKMANSHIP, INCLUDING SETTLING OF BACKFILLED AREAS BELOW GRADE FOR A PERIOD OF ONE (1) YEAR FOLLOWING THE DATE OF FINAL ACCEPTANCE OF THE WORK. IF, WITHIN ONE YEAR FROM THE DATE OF COMPLETION, SETTLEMENT OCCURS AND ADJUSTMENTS IN PIPES, VALVES AND SPRINKLER HEADS, FINISH GRADE OR PAVING IS NECESSARY TO BRING THE SYSTEM, FINISH GRADE OR PAVING TO THE PROPER LEVEL, THE CONTRACTOR, AS PART OF THE WORK UNDER HIS CONTRACT, SHALL MAKE ALL ADJUSTMENTS WITHOUT EXTRA COST TO THE OWNER, INCLUDING THE COMPLETE RESTORATION OF ALL DAMAGED PLANTING, PAVING, OR OTHER IMPROVEMENTS OF ANY KIND.

SHOULD ANY OPERATIONAL DIFFICULTIES IN CONNECTION WITH THE SPRINKLER SYSTEM DEVELOP WITHIN THE SPECIFIED GUARANTEE PERIOD WHICH, IN THE OPINION OF THE OWNER, MAY BE DUE TO INFERIOR MATERIAL AND/OR WORKMANSHIP, SAID DIFFICULTIES SHALL BE IMMEDIATELY CORRECTED BY THE CONTRACTOR TO THE SATISFACTION OF THE OWNER AT NO ADDITIONAL COST TO THE OWNER INCLUDING ANY AND ALL OTHER DAMAGE CAUSED BY SUCH DEFECTS.

V. RECORD AND AS-BUILT DRAWINGS:

(A) THE CONTRACTOR SHALL PROVIDE AND KEEP UP TO DATE A COMPLETE "AS-BUILT" RECORD SET OF BLACKLINE PRINTS WHICH SHALL BE CORRECTED DAILY AND SHOW EVERY CHANGE FROM THE ORIGINAL DRAWINGS AND SPECIFICATION AND EXACT "AS-BUILT" LOCATIONS, SIZES AND KINDS OF EQUIPMENT. PRINTS FOR THIS PURPOSE MAY BE OBTAINED FROM THE OWNER AT COST. THIS SET OF DRAWINGS SHALL BE KEPT ON THE SITE AND SHALL BE USED ONLY AS A RECORD SET.

(B) THESE DRAWINGS SHALL ALSO SERVE AS WORK PROGRESS SHEETS, AND THE CONTRACTOR SHALL MAKE NEAT AND LEGIBLE ANNOTATIONS THEREON DAILY AS THE WORK PROCEEDS, SHOWING THE WORK AS ACTUALLY INSTALLED. THESE DRAWINGS SHALL BE AVAILABLE AT ALL TIMES FOR INSPECTION AND SHALL BE KEPT IN A SAFE LOCATION ON THE JOB SITE.

(C) BEFORE THE DATE OF THE FINAL INSPECTION, THE CONTRACTOR SHALL TRANSFER ALL INFORMATION FROM THE "AS-BUILT" PRINTS TO A MYLAR SET, ALL WORK SHALL NEAT AND LEGIBLE PREPARED IN INK.

(D) THE CONTRACTOR SHALL DIMENSION FROM TWO (2) PERMANENT POINTS OF REFERENCE, BUILDING CORNERS, SIDEWALK OR ROAD INTERSECTIONS, ETC., THE LOCATION OF

THE FOLLOWING ITEMS:

1) CONNECTION TO EXISTING WATER LINES.
2) CONNECTION TO EXISTING ELECTRICAL POWER.

(E) ON OR BEFORE THE DATE OF THE FINAL

3) GATE VALVES.
4) ROUTING OF SPRINKLER PRESSURE LINES (DIMENSION MAX. 100' ALONG ROUTING).
5) SPRINKLER CONTROL VALVES.
6) ROUTING OF CONTROL WIRING.

INSPECTION, THE CONTRACTOR SHALL DELIVER THE CORRECTED AND COMPLETED MYLARS TO THE OWNER. DELIVERY OF THE MYLARS WILL NOT RELIEVE THE CONTRACTOR OF THE RESPONSIBILITY OF FURNISHING REQUIRED INFORMATION THAT MAY BE OMITTED FROM THE PRINTS.

(F) CONTROLLER CHARTS:

1) AS-BUILT DRAWINGS SHALL BE PREPARED BY THE LANDSCAPE CONTRACTOR BEFORE CONTROLLER CHARTS ARE PREPARED.

2) TWO (2) SETS OF COLOR CODED IRRIGATION CHARTS INDICATING ZONES OF COVERAGE FOR EACH STATION WILL BE REQUIRED FOR EACH CONTROLLER(S). CHARTS WILL BE SEALED IN BETWEEN 2 PLASTIC SHEETS (10 MLS. THICK)

VI. OPERATION AND MAINTENANCE MANUALS

(A) PREPARE AND DELIVER TO THE OWNER INSPECTOR WITHIN TEN CALENDAR DAYS PRIOR TO COMPLETION OF CONSTRUCTION, TWO HARD COVER BINDERS WITH THREE RINGS CONTAINING THE FOLLOWING INFORMATION:

1) INDEX SHEET STATING CONTRACTOR'S ADDRESS AND TELEPHONE NUMBER, A LIST OF EQUIPMENT WITH NAMES AND ADDRESSES OF LOCAL MANUFACTURER'S REPRESENTATIVES.
2) CATALOG AND PARTS SHEETS ON EVERY MATERIAL AND EQUIPMENT INSTALLED UNDER THIS CONTRACT.
3) GUARANTEE STATEMENT.
4) COMPLETE OPERATING AND MAINTENANCE INSTRUCTION ON ALL MAJOR EQUIPMENT.

VII. EQUIPMENT TO BE FURNISHED

DELIVER THE FOLLOWING OPERATING AND MAINTENANCE TOOLS TO THE CITY INSPECTOR WHEN WORK IS COMPLETED AND PRIOR TO FINAL ACCEPTANCE OF WORK:

(A) ONE (1) WRENCH FOR DISASSEMBLY AND ADJUSTMENT OF EACH TYPE OF SPRINKLER HEAD SUPPLIED.
(B) TWO (2) KEYS FOR EACH AUTOMATIC CONTROLLER AND/OR ENCLOSURE.
(C) TWO (2) QUICK COUPLER KEYS WITH SWIVEL HOSE BIBS.
(D) TWO (2) KEYS FOR OPENING VALVE BOXES.
(E) TWO (2) SPECIAL WRENCHES SUITABLE FOR OPERATING EACH TYPE OF SHUTOFF VALVE INSTALLED.

VIII. GUARANTEE

(A) THE GUARANTEE FOR THE SPRINKLER IRRIGATION SYSTEM SHALL BE MADE IN ACCORDANCE WITH THE CITY. THE GENERAL CONDITIONS AND SUPPLEMENTARY CONDITIONS OF THESE SPECIFICATIONS SHALL BE FILED WITH THE CITY INSPECTOR PRIOR TO ACCEPTANCE OF THE IRRIGATION SYSTEM.

(B) A COPY OF THE GUARANTEE FORM SHALL BE INCLUDED IN THE OPERATIONS AND MAINTENANCE MANUAL.

(C) THE GUARANTEE FORM SHALL BE RETYPED ONTO THE CONTRACTOR'S LETTERHEAD AND CONTAIN THE FOLLOWING INFORMATION:

GUARANTEE FOR SPRINKLER IRRIGATION SYSTEM

"WE HEREBY GUARANTEE THAT THE SPRINKLER IRRIGATION SYSTEM WE HAVE FURNISHED AND INSTALLED IS FREE FROM DEFECTS IN MATERIALS AND WORKMANSHIP, AND THE WORK HAS BEEN COMPLETED IN ACCORDANCE WITH THE DRAWINGS AND SPECIFICATIONS, ORDINARY WEAR AND TEAR AND UNUSUAL ABUSE, OR NEGLECT EXCEPTED. WE AGREE TO REPAIR OR REPLACE ANY DEFECTS IN MATERIAL OR WORKMANSHIP WHICH MAY DEVELOP DURING THE PERIOD OF ONE YEAR FROM DATE OF ACCEPTANCE AND ALSO TO REPAIR OR REPLACE ANY DAMAGE RESULTING FROM THE REPAIRING OR REPLACING OF SUCH DEFECTS AT NO ADDITIONAL COST TO THE DEVELOPER. WE SHALL MAKE SUCH REPAIRS OR REPLACEMENTS WITHIN A REASONABLE TIME, AS DETERMINED BY THE LANDSCAPE ARCHITECT, AFTER RECEIPT OF WRITTEN NOTICE. IN THE EVENT OF OUR FAILURE TO MAKE SUCH REPAIRS OR REPLACEMENTS WITHIN A REASONABLE TIME AFTER RECEIPT OF WRITTEN NOTICE FROM THE LANDSCAPE ARCHITECT, WE AUTHORIZE THE DEVELOPER TO PROCEED TO HAVE SAID REPAIRS OR REPLACEMENTS MADE AT OUR EXPENSE AND WE WILL PAY THE COSTS AND CHARGES THEREFORE UPON DEMAND."

REFERENCE ONLY!

LANGDON WILSON
ARCHITECTURE
PLANNING
INTERIORS
18800 VON KARMAN AVENUE, SUITE 200
IRVINE, CALIFORNIA 92612-1517
949 - 833 - 9193

FRANK RADMACHER ASSOCIATES, INC.
Landscape Architects
PHONE (714) 832-1774 FAX (714) 832-5721
14841 Yorba Street, Suite 204 · Tustin, CA 92780
EMAIL: F-R-A@PACBELL.NET

CITY OF FONTANA
CIVIC CENTER
8353 SIERRA AVENUE FONTANA, CALIFORNIA

REV.	DATE	ISSUED FOR	REV.	DATE	ISSUED FOR
				3-27-06	BID SET PERMIT SET
				4-17-06	BID SET PERMIT SET

Stamp
LICENSED LANDSCAPE ARCHITECT
Signature
Renewal Date
Date
STATE OF CALIFORNIA

IRRIGATION SPECIFICATIONS
N. T. S.

L007
OF

FRA JOB NO. 2791

PLAN CHECK SUBMITTAL 2-06-06 BID SET 4/17/06 PERMIT SET 4/17/06

\\Iridium\2700's\2791 Fontana City Hall\Irrig Specs.dwg, 4/13/2006 3:09:38 PM, HP800.pc3, 1:212.494, gp

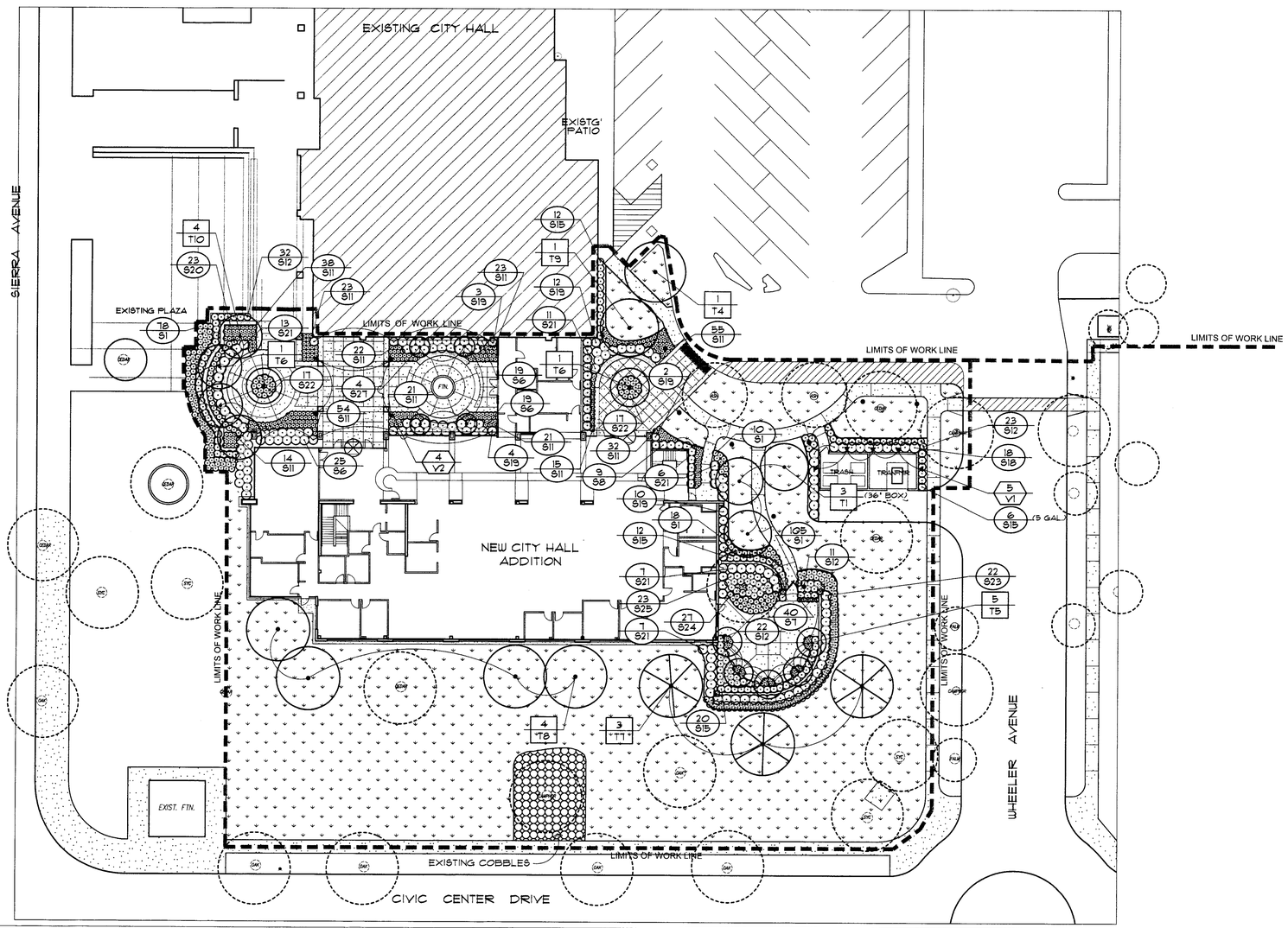

PLANT LEGEND

TREES

	BOTANICAL NAME	COMMON NAME	SIZE / COMMENTS
T1	PINUS CANARIENSIS	CANARY ISLAND PINE	48" BOX (36" NOTED) / 14'-16' (12'-14')
T2	---------- OMIT ----------		
T3	---------- OMIT ----------		
T4	CUPANIOPSIS ANACARDIOIDES	CARROTWOOD	36" BOX STD. / 12'-14' x 6'-7'
T5	ERIOBOTRYA DEFLEXA	BRONZE LOQUAT	36" BOX STD. / 11'-12' x 4'-5'
T6	PHOENIX CANARIENSIS	CANARY ISLAND DATE PALM	8'-18/20' BROWN TRUNK HT.
T7	CEDRUS DEODARA	DEODAR CEDAR	36" BOX / 12'-14' x 5'-6'
T8	PLATANUS ACERIFOLIA 'BLOODGOOD'	LONDON PLANE	36" BOX STD. / 14'-16' x 6'-7'
T9	FRAXINUS UHDEI	EVERGREEN ASH	36" BOX / 14'-16' x 6'-7'
T10	LAGERSTROEMIA INDICA 'CATAWBA'	CRAPE MYRTLE	36" BOX MULTI. / 9'-10' x 6'-7'

SHRUBS

S1	TRACHELOSPERMUM JASMINOIDES	STAR JASMINE	1 GAL. @ 24" O.C.
S2	PITTOSPORUM TOBIRA 'VARIEGATA'	VARIEGATED MOCK ORANGE	15 GAL. @ 4' O.C.
S3	AZALEA INDICA 'GEORGE TABOR'	GEORGE TABOR AZALEA	5 GAL. @ 30" O.C.
S4	PRUNUS LAUROCERASAS	ENGLISH LAUREL	15 GAL. @ 5' O.C.
S5	NANDINA DOMESTICA	HEAVENLY BAMBOO	15 GAL. @ 3' O.C.
S6	RAPHIOLEPIS INDICA 'SPRINGTIME'	INDIAN HAWTHORN	15 GAL. @ 42" O.C.
S7	LIRIOPE MUSCARI 'SILVERY SUNPROOF'	N. C. N.	1 GAL. @ 18" O.C.
S8	LIGUSTRUM JAPONICA 'TEXANUM'	TEXAS PRIVET	15 GAL. @ 3' O.C.
S9	RAPHIOLEPIS INDICA 'BALLERINA'	DWARF INDIAN HAWTHORN	5 GAL. @ 30" O.C.
S10	PHORMIUM TENAX 'MAORI MAIDEN'	FLAX	5 GAL. @ 3' O.C.
S11	AGAPANTHUS AFRICANUS 'QUEEN ANNE'	LILY OF THE NILE	1 GAL. @ 18" O.C.
S12	PITTOSPORUM TOBIRA 'WHEELER'S DWARF'	DWARF MOCK ORANGE	5 GAL. @ 30" O.C.
S13	BUXUS M. JAPONICA 'GREEN BEAUTY'	JAPANESE BOXWOOD	5 GAL. @ 24" O.C.
S14	TULBAGHIA VIOLACEA	SOCIETY GARLIC	1 GAL. @ 18" O.C.
S15	PRUNUS CAROLINIANA 'COMPACTA'	DWARF CAROLINA CHERRY	15 GAL. @ 30" O.C.
S16	ASPIDIUM CAPENSE	LEATHERLEAF FERN	5 GAL. @ 30" O.C.
S17	CLIVIA HYBRIDA	KAFFIR LILY	5 GAL. @ 24" O.C.
S18	ESCALLONIA FRADESII	PINK ESCALLONIA	15 GAL. @ 42" O.C.
S19	PODOCARPUS GRACILIOR	FERN PINE	15 GAL. COLUMN
S20	EUONYMUS JAPONICA MICROPHYLLA	DWARF EUONYMUS	5 GAL. @ 24" O.C.
S21	ARBUTUS UNEDO 'COMPACTA'	DWARF STRAWBERRY BUSH	15 GAL. @ 42" O.C.
S22	PHORMIUM TENAX 'TOM THUMB'	FLAX	5 GAL. @ 24" O.C.
S23	ROSA FLORIBUNDA 'ICEBERG'	WHITE ICEBERG ROSE	15 GAL. @ 42" O.C.
S24	CUPHEA HYSSOPIFOLIA	FALSE HEATHER	5 GAL. @ 24" O.C.
S25	MORAEA BICOLOR	FORTNIGHT LILY	5 GAL. @ 30" O.C.
S26	CYCAS REVOLUTA	SAGO PALM	48" HT. x 48" WIDE
S27	CERCIS OCCIDENTALIS	WESTERN REDBUD	24" BOX STD.

VINES

V1	BIGNONIA VIOLACEA	LAVENDER TRUMPET VINE	15 GALLON
V2	PANDOREA JASMINOIDES 'ROSEA'	PINK BOWER VINE	15 GALLON

SODDED DWARF FESCUE (MARATHON II) WITH 6" X 6" CONCRETE MOW STRIP

ALL PLANT BEDS — 3" COVER - FOREST FLOOR MULCH- 0-2" OR EQUAL
SOURCE: AGUNAGA FERTILIZER COMPANY
IRVINE, CA (949) 786-9958

EXISTING TREE - PROTECT IN PLACE & AVOID TRENCHING UNDER DRIP LINE

INSTALL PALM WITH SAND DRAINAGE SUMP PER PLANTING DETAIL

NOTE: REFER TO CIVIL ENGINEER'S PRECISE GRADE PLANS FOR ALL ELEVATIONS

TREE PLACEMENT / UTILITIES NOTE

THE LANDSCAPE CONTRACTOR SHALL NOTIFY THE LANDSCAPE ARCHITECT IMMEDIATELY WHEN ANY TREE TO BE INSTALLED IS WITHIN EIGHT FEET (8') OF AN ABOVE-GRADE OR SUBSURFACE UTILITY BOX, STRUCTURE OR CONNECTION. THE TREE SHALL NOT BE PLANTED UNTIL THE LANDSCAPE ARCHITECT HAS DETERMINED IF THIS TREE SHALL BE PLANTED, RELOCATED OR ELIMINATED.

ALL TREE PLACEMENT SHALL BE APPROVED BY LANDSCAPE ARCHITECT PRIOR TO PLANTING OF ANY TREE.

ALL TREES PLANTED WITHIN FIVE FEET (5') OF HARDSCAPE, PAVING OR STRUCTURES SHALL BE PLANTED WITH AN 'APPROVED' LINEAR ROOT GUARD BARRIER. BARRIERS SHALL BE INSTALLED AGAINST THE CURB/SIDEWALK OR WALL SIDE AS APPLICABLE. BARRIERS SHALL BE A MINIMUM OF .06 MIL THICKNESS WITH RAISED VERTICAL INSIDE RIBS 3' APART (24" X 10' LONG).

SHRUB PLANTING / UTILITES NOTE:

ALL SHRUB PLANTING ADJACENT TO UTILITY BOXES SHALL BE PLACED IN THE FIELD BY THE LANDSCAPE ARCHITECT AND THE EXACT PLACEMENT APPROVED PRIOR TO INSTALLATION.

REFERENCE ONLY

LANGDON WILSON
ARCHITECTURE
PLANNING
INTERIORS
18000 VON KARMAN AVENUE, SUITE 200
IRVINE, CALIFORNIA 92612-1517
949 • 833 • 9183

FRANK RADMACHER ASSOCIATES, INC.
Landscape Architects
PHONE (714) 832-1774 FAX (714) 832-5721
14841 Yorba Street, Suite 204 · Tustin, CA 92780
EMAIL: F-R-A@PACBELL.NET

CITY OF FONTANA
CIVIC CENTER
8353 SIERRA AVENUE
FONTANA, CALIFORNIA

REV.	DATE	ISSUED FOR	REV.	DATE	ISSUED FOR
				2-06-06	PLAN CHK CLCUB
				3-27-06	BID SET
				4-17-06	PERMIT SET
					BID SET
					PERMIT SET

Stamp

LICENSED LANDSCAPE ARCHITECT
Stephen Lettelleir
Date
STATE OF CALIFORNIA

PLAN CHECK SUBMITTAL 4-17-06 BID SET 4-17-06 PERMIT SET 4-17-06

PLANTING PLAN
1" = 20'

L008
OF

FRA JOB NO. 2791

\\fridium\2700\32791 Fontana City Hall\2791.20 Scale Plant Plan.dwg, 4/13/2006 3:13:00 PM, HP800.pc3, 1:240, gp

PLANTING DETAILS

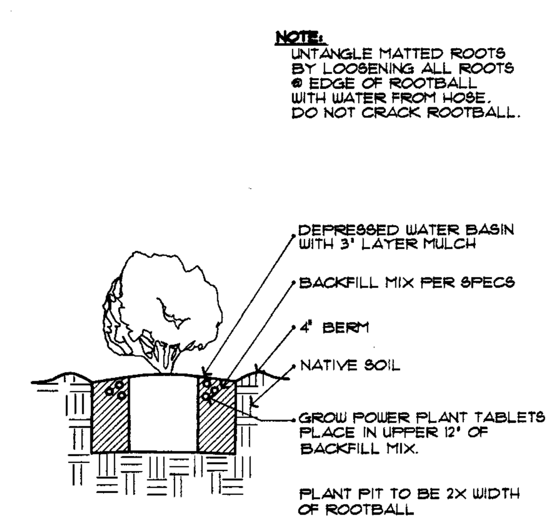

SHRUB PLANTING

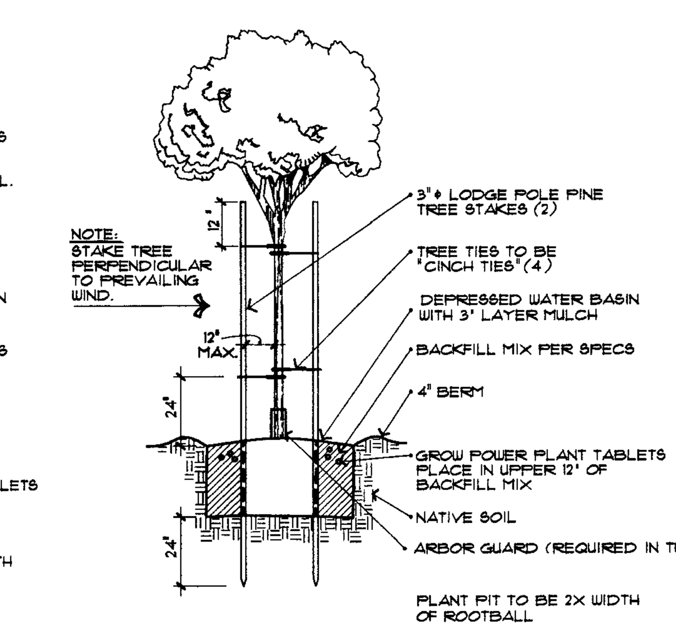

TREE PLANTING

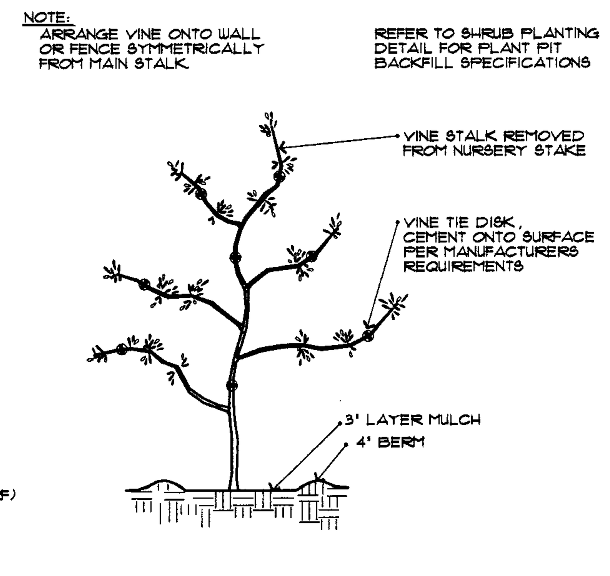

VINE DETAIL

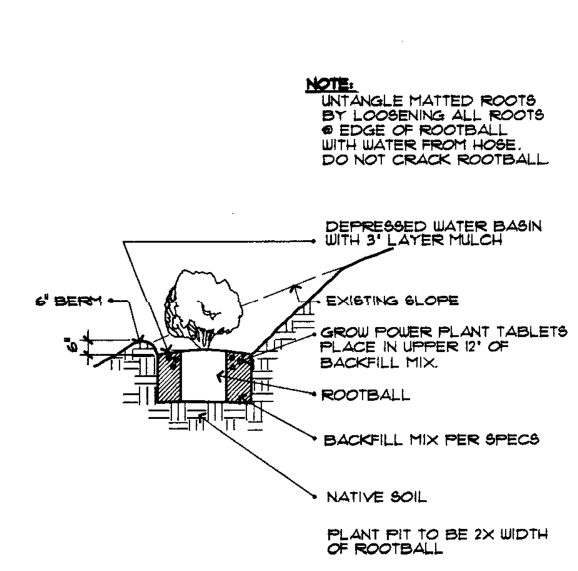

SHRUB PLANTING-SLOPE

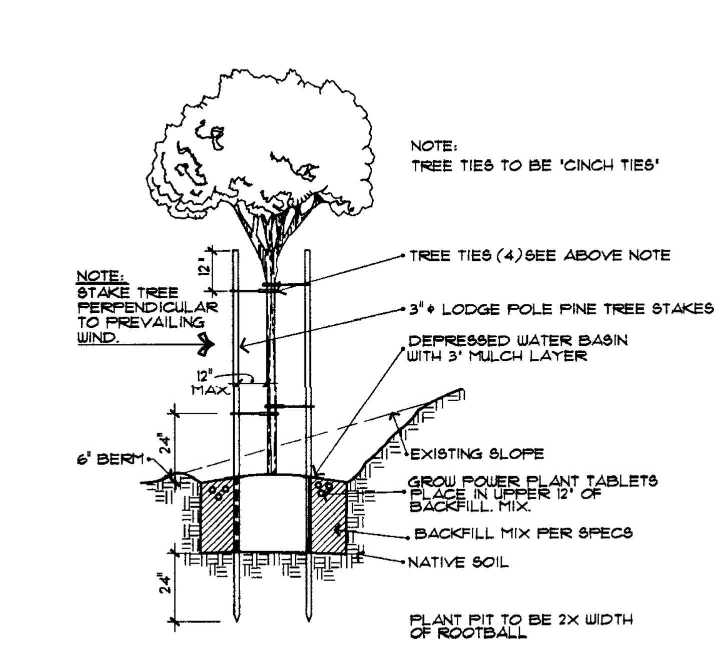

TREE PLANTING - SLOPE

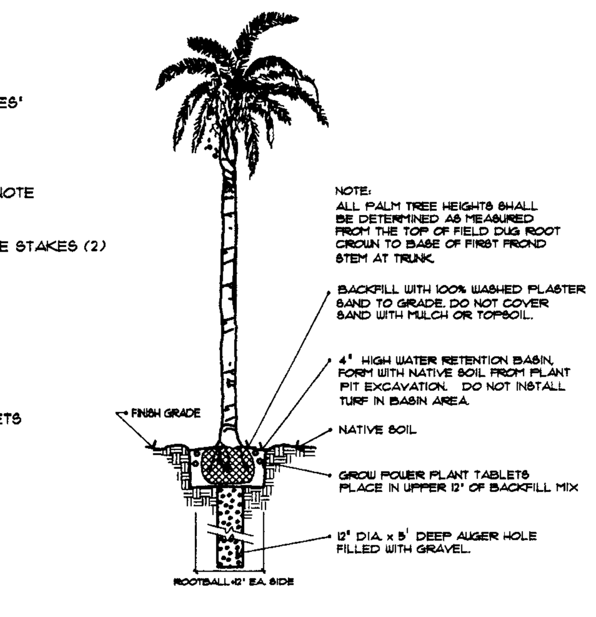

PALM PLANTING

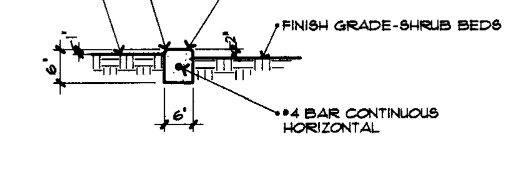

CONCRETE HEADER

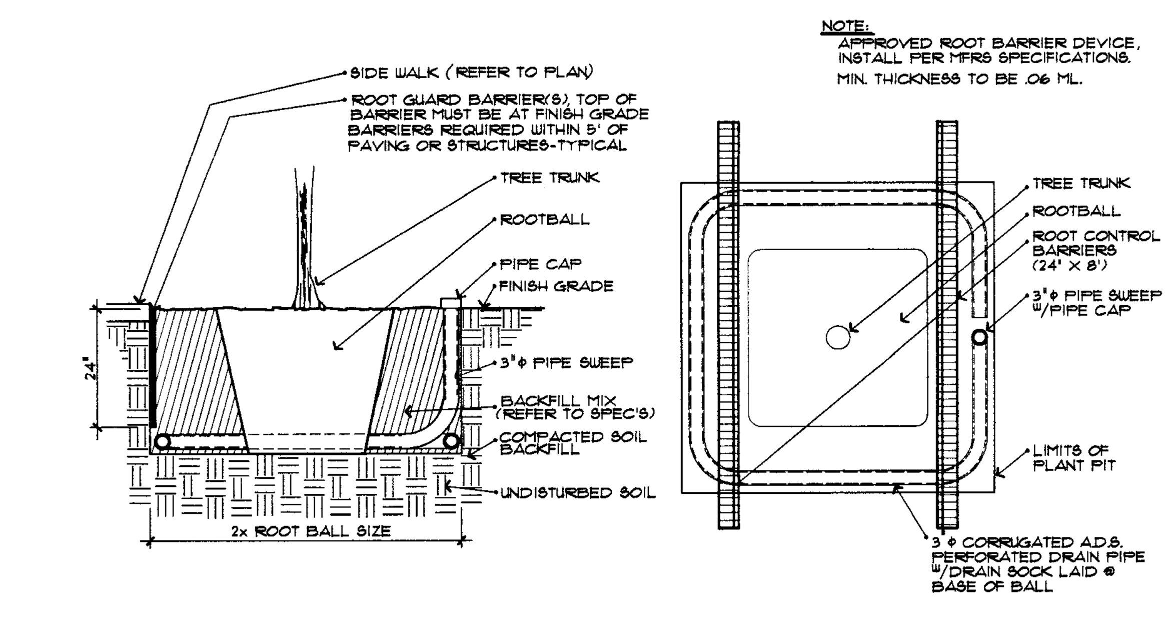

ROOT GUARD BARRIER WITH PIPE CLEAN-OUT
(REQUIRED FOR ALL TREES PLANTED WITHIN 5 FEET OF PAVING OR STRUCTURES)

PLANTING SPECIFICATIONS

I. SCOPE OF WORK
FURNISH ALL LABOR AND MATERIALS TO COMPLETE THE WORK AS SHOWN ON THE DRAWINGS OR HEREIN SPECIFIED.

II. VERIFICATION OF MATERIALS
OWNER'S REPRESENTATIVE MAY REQUEST INSPECTION OF DELIVERY SLIPS FOR MATERIALS TO VERIFY SPECIFIED QUANTITIES OF BULK DELIVERIES. ON-SITE SUPERVISION OF THESE ITEMS WILL BE CLOSELY ADHERED TO.

III. MATERIALS

(A) PLANTS

1) IDENTIFICATION – PLANTS SHALL BE THE VARIETY AND SIZE SHOWN ON THE PLANS AND SHALL CONFORM TO THE REQUIREMENTS HEREIN. ONE OF EACH BUNDLE OR LOT SHALL BE TAGGED WITH PLANT NAME IN ACCORDANCE WITH RECOMMENDATIONS OF THE AMERICAN ASSOCIATION OF NURSERYMEN.

2) SUBSTITUTION – SUBSTITUTIONS FOR THE INDICATED PLANT MATERIALS WILL BE PERMITTED, PROVIDED THE SUBSTITUTE MATERIALS ARE APPROVED IN ADVANCE BY THE LANDSCAPE ARCHITECT AND THE SUBSTITUTIONS ARE MADE AT NO ADDITIONAL COST. EXCEPT FOR THE VARIATIONS SO AUTHORIZED, ALL SUBSTITUTE PLANT MATERIAL SHALL CONFORM TO THE REQUIREMENTS OF THESE SPECIFICATIONS. IF ACCEPTED SUBSTITUTE MATERIALS ARE OF LESS VALUE THAN THOSE INDICATED OR SPECIFIED, THE CONTRACT PRICE WILL BE ADJUSTED IN ACCORDANCE WITH THE PROVISIONS OF THE CONTRACT.

3) QUALITY AND SIZE – ALL PLANTS SHALL HAVE A HABIT OF GROWTH THAT IS NORMAL TO THE SPECIES, BE SOUND, HEALTHY, VIGOROUS AND FREE FROM INSECT PESTS, PLANT DISEASES, SUN SCALDS, FRESH ABRASIONS OF THE BARK, EXCESSIVE ABRASIONS OR OTHER OBJECTIONABLE DISFIGUREMENTS. TREE TRUNKS SHALL BE STURDY, STRAIGHT AND WELL "HARDENED OFF". THE PLANTS SHALL HAVE NORMALLY WELL DEVELOPED BRANCH SYSTEMS AND VIGOROUS AND FIBROUS ROOT SYSTEMS WHICH ARE NOT COILED, ROOT BOUND OR POT BOUND. PLANTS SHALL BE GROWN IN NURSERIES WHICH HAVE BEEN INSPECTED BY THE STATE DEPARTMENT OF AGRICULTURE AND HAVE COMPLIED WITH ITS REGULATIONS.

4) REJECTION – THE OWNER/AND OR LANDSCAPE ARCHITECT SHALL HAVE THE RIGHT TO REJECT PLANTS THAT DO NOT MEET PLAN SPECIFICATIONS OR ACCEPTABLE STANDARDS OF THE TRADE.

(B) COMMERCIAL FERTILIZER

1) "GROW POWER" PLANT TABLETS WITH GUARANTEED ANALYSIS OF 12-8-8.

⊛ 2) PELLETIZED FORM FOR SOIL PREPARATION SHALL BE COMMERCIAL FERTILIZER HAVING A ____________ FORMULA. FERTILIZERS SHALL BE UNIFORM IN COMPOSITION, DRY AND FREE-FLOWING, DELIVERED TO THE SITE IN THE ORIGINAL, UNOPENED CONTAINERS, EACH BEARING THE MANUFACTURER'S GUARANTEED ANALYSIS. ANY FERTILIZER WHICH BECOMES CAKED OR OTHERWISE DAMAGED, MAKING IT UNSUITABLE FOR USE, WILL NOT BE ACCEPTED.

(C) SOIL AMENDMENTS

1) NITROGEN-STABILIZED FIR SHAVINGS – AS COMMONLY USED FOR LANDSCAPE SOIL PREPARATION AND SHALL CONTAIN FROM .5 TO 1% ACTUAL NITROGEN.

2) AGRICULTURAL GYPSUM – SHALL BE APPROVED STANDARD BRAND AGRICULTURAL CALCIUM SULFATE (CA S04) AS APPLIED TO SOILS AND SHALL CONTAIN 19% COMBINED SULFUR.

3) IRON SULFATE – SHALL BE AGRICULTURAL FERRIC SULFATE (FE.2 S04), GRANULAR IN COMPOSITION AND CONTAINING 20% METALLIC EQUIVALENT IRON AND 17% COMBINED SULFUR.

(D) TREE STAKES – SHALL BE 3" DIAMETER X 10' LONG TREATED LODGEPOLE PINE STAKES POINTED ON ONE END.

(E) TREE TIES – SHALL BE "CINCH TIE" BRAND PLASTIC TIES.

(F) VINE TIES – SHALL BE CLEAR PLASTIC DISCS WITH EYE TO RECEIVE GREEN PLASTIC COVERED WIRE TIE. DISC SHALL BE SECURED WITH ADHESIVE.

(G) PLASTIC HEADER BOARD – SHALL BE "BEND-A-BOARD" BRAND (BROWN) MANUFACTURED BY EPIC PLASTICS. 1880 HARDEN TRACT RD., RICHMOND, CA 94801 (510) 235-9339.

(H) LAWN SEED – SHALL BE THE SPECIFIC VARIETY LISTED ON THE PLANS/PLANT LEGEND.

(I) SOD – SHALL BE THE SPECIFIC VARIETY LISTED ON THE PLANS/PLANT LEGEND

(J) HYDROMULCH– FIBER SHALL BE PRODUCED FROM CELLULOSE SUCH AS WOOD PULP OR SIMILAR ORGANIC MATERIAL AND SHALL BE OF SIMILAR CHARACTER THAT IT WILL DISPERSE INTO A UNIFORM SLURRY WHEN MIXED WITH WATER. THE FIBER SHALL BE OF SUCH CHARACTER WHEN USED IN THE APPLIED MIXTURE, AN ABSORPTIVE OR POROUS MAT, BUT NOT A MEMBRANE, WILL RESULT ON THE SURFACE OF THE GROUND. MATERIALS WHICH INHIBIT GERMINATION SHALL NOT BE PRESENT IN THE HYDROSEED MIX.

⊛ (K) COMMERCIAL FERTILIZER–"PELLETIZED" FERTILIZER FOR HYDROMULCH SLURRY SHALL BE __________ (SLOW RELEASE).

(L) SOIL/MULCH BINDERS– CONWED TYPE 2000-TERRA TAC 3, "ECOLOGY CONTROL", FINN STIKPLUS OR APPROVED EQUAL.

(M) CHEMICAL GERMINATING ADDITIVES–"CATALYTIC" PRE-EMERGE, FINN "HYDROMAX" OR APPROVED EQUAL.

(N) MOISTURE RETENTION ADDITIVES – FINN "HST" OR APPROVED EQUAL.

(O) TOPDRESSING – SHALL CONSIST OF NITROLIZED FIR OR REDWOOD SHAVINGS IN PARTICLE SIZES RANGING FROM APPROXIMATELY 0 TO 2 INCHES. (REFER TO PLANTING LEGEND)

(P) SEED MIX: SLOPE AREAS
LANDSCAPE CONTRACTOR MUST FURNISH THE LANDSCAPE ARCHITECT WITH A SUPPLIER CERTIFIED COPY OF THE SEED MIX AND "PLS" (PURE LIVE SEED) RATINGS.

IV. GRADING

(A) MOISTURE CONTENT – THE SOIL SHALL NOT BE WORKED WHEN THE MOISTURE CONTENT IS SO GREAT THAT EXCESSIVE COMPACTION WILL OCCUR NOR WHEN IT IS SO DRY A DUST WILL FORM IN IN THE AIR OR THAT CLODS WILL NOT BREAK READILY. WATER SHALL BE APPLIED, IF NECESSARY TO PROVIDE IDEAL MOISTURE FOR FILLING AND FOR PLANTING AS HEREIN SPECIFIED.

(B) ALL AREAS WILL BE RECEIVED BY CONTRACTOR AT SUBSTANTIALLY (+/–) ONE FOOT OF FINISH GRADE.

(C) FINISH GRADING AND WEEDING– ALL AREAS SHALL A BE GRADED TO A SMOOTH, EVEN AND UNIFORM PLANE WITH NO ABRUPT CHANGE OF SURFACE. ALL WEEDS SHALL BE REMOVED AND DISPOSED OF BY LANDSCAPE CONTRACTOR.

(D) FINISHING – CONTRACTOR SHALL DISPOSE OF BURIED DEBRIS, FOUND UPON ANY EXCAVATION, TO ANY CONVENIENT DUMP OR OFF-SITE LOCATION AT NO EXPENSE TO OWNER.

V. SOIL PREPARATION

(A) CULTIVATE ALL AREAS TO BE PLANTED TO DEPTH OF AT LEAST SIX INCHES SO THE SOIL SHALL BE LOOSE AND FRIABLE.

(B) THE TOP TWO INCHES OF SOIL IN ALL CULTIVATED AREAS SHALL BE FREE OF STONES, ROOTS LARGER THAN ONE INCH IN DIAMETER AND OTHER DELETERIOUS MATTER WHICH MIGHT BE A HINDRANCE TO PLANTING AND MAINTENANCE.

(C) PLANTING AREAS SHALL HAVE THE FOLLOWING MATERIALS TILLED INTO THE TOP FOUR (4") INCHES OF SOIL AT A RATE PER 1,000 SQUARE FEET:

⊛ 5 CU. YDS. NITROLIZED FIR SHAVINGS
100 LBS. AGRICULTURAL GYPSUM
15 LBS. 10-10-10 COMMERCIAL FERTILIZER

VI. SODDING

(A) SOIL SHALL BE LEFT 1-1/2" BELOW FINISH GRADE AS THE SOD WILL BRING THE LEVEL UP TO THE PROPER HEIGHT.

(B) AFTER PREPARATION OF SOIL, THE AREA MUST BE PRE-IRRIGATED TO WET IT TO A DEPTH OF FOUR INCHES (4"). IT SHALL BE DAMP BUT NOT MUDDY AND WITHOUT DEPRESSIONS.

(C) INITIAL PLACEMENT OF SOD SHALL BE LAID ON THE SAME DAY IT IS DELIVERED. IT SHALL NOT BE LEFT IN THE HOT SUN NOR LEFT IN ROLLS OR STACKED OVER NIGHT.

(D) PRIOR TO PLACING OF SOD, BROADCAST 16-20-0 FERTILIZER AT A RATE OF 10 POUNDS PER 1,000 SQUARE FEET OVER SURFACE.

(E) SOD SHALL BE UNROLLED AND PLACED CAREFULLY IN A STAGGERED PATTERN. A PIECE OF 2X4 SHALL BE USED TO TAMP EACH ROLL AGAINST THE ADJACENT STRIPS TO ELIMINATE JOINTS AND EDGES.

(F) SOD SHALL BE TRIMMED TO CONFORM TO LAWN SHAPES DESIGNATED IN PLANTING PLAN.

(G) AFTER SOD IS LAID, IT SHALL BE IRRIGATED THOROUGHLY TO PROVIDE GOOD MOISTURE PENETRATION.

(H) ALL SOD AREAS SHALL BE ROLLED WITH A SOD ROLLER NOT LATER THAN FIVE (5) DAYS AFTER INSTALLATION. SOD SHALL CONFORM WITH FINISH GRADE AND CONTOURS. A SECOND ROLLING MAY BE REQUIRED.

(I) ALL PERIMETER AND BORDER AREAS SHALL NOT BE LAID WITH LESS THAN FULL WIDTH SOD NOR LESS THAN ONE-HALF LENGTH SOD. (SOD WIDTH=12", SOD LENGTH=48")

(J) ALL SOD IN SODDED AREAS SHALL BE HANDLED AND LAID IN A HIGH STANDARD WORKMANSHIP MANNER. ALL ENDS, JOINTS AND CUTS TO BE FIT AND TIGHTLY JOINED SO THERE ARE NO VOIDS AND THE FINAL APPEARANCE IS ONE OF A CONTINUOUS LAWN.

VII. SEEDING – LAWN AREAS (NOT APPLICABLE)

(A) SEED MIXTURE SHALL BE AS SPECIFIED ON PLANS.

(B) JUST PRIOR TO SOWING SEED, THE SURFACE OF THE AREA TO BE PLANTED SHALL BE SUFFICIENTLY LOOSE AND FRIABLE TO RECIEVE THE SEED. THE LAWN SHALL BE SOWN EVENLY AT THE RATE OF ________ POUNDS PER 1,000 SQ.FT. DURING THE SOWING, CARE SHALL BE EXERCISED TO KEEP THE SEED MIXTURE UNIFORM, AVOIDING UNEVEN DISTRIBUTION OF VARIETIES.

(C) SEED APPLICATION:
1. HAND BROADCAST (PUSH SPREADER OR MECHANICAL SEEDER.)
2. TRACTOR-SEEDER COMBINATION
3. HYDROMULCH APPLICATION: USING 2000 POUNDS OF HYDROMULCH AND ________ POUNDS OF FERTILIZER PER ACRE. (   )

(D) FOLLOWING THE SOWING OF SEED AND APPLICATION OF MULCH, WATER SHALL BE APPLIED BY A GENTLE SPRAY, AND THE AREAS KEPT MOIST, BUT NOT GLISTENING WET, UNTIL THE FINAL INSPECTION. ALL ADJACENT AREAS AND STRUCTURES SHALL RECEIVE A THOROUGH CLEANING TO REMOVE HYDROSEED OVERSPRAY.

(E) IF DEPRESSIONS DEVELOP IN LAWN SURFACE, THEY SHALL BE FILLED WITH APPROVED TOPSOIL, LIGHTLY COMPACTED AND BROUGHT UP TO SPECIFIED GRADE. FILLED AREAS SHALL THEN BE SEEDED AS PREVIOUSLY SPECIFIED.

(F) CONTRACTOR SHALL BE RESPONSIBLE FOR REPAIRING AND RESEEDING ANY LAWN AREAS DAMAGED DURING PLANTING.

VIII. ROOTED CUTTINGS

(A) ROOTED CUTTINGS SHALL BE PLANTED SUFFICIENTLY DEEP TO COVER ALL ROOTS AND SPACED AS SPECIFIED ON THE PLANS.

(B) ROOTED CUTTINGS SHALL HAVE BEEN GROWN IN FLATS AND SHALL REMAIN IN THOSE FLATS UNTIL TIME OF TRANSPLANTING. THEN, THE FLAT SOIL SHALL CONTAIN SUFFICIENT MOISTURE SO THAT THE SOIL DOES NOT FALL APART WHEN LIFTING PLANTS FROM THE FLAT. THE PLANT SHALL HAVE SUFFICIENT SOIL AROUND THE ROOTS TO AVOID DAMAGE OR DISTURBANCE TO ROOT SYSTEM.

(C) ROOTED CUTTINGS SHALL NOT BE ALLOWED TO DRY OUT BEFORE OR WHILE BEING PLANTED. WILTED PLANTS WILL NOT BE ACCEPTED.

(D) AT TIME OF PLANTING ALL GROUND COVER PLANTS, THE EARTH AROUND EACH PLANT SHALL BE FIRMLY TAMPED TO SUFFICIENTLY FORCE OUT ALL AIR POCKETS.

(E) ALL ROOTED CUTTINGS SHALL BE COVERED WITH NITROLIZED FIR OR REDWOOD SHAVINGS, REFER TO PLANTING PLAN AND/OR LEGEND FOR SPECIFIC DEPTH AND MANUFACTURER.

⊛ PENDING SOIL ANALYSIS REPORT

IX. TREE & SHRUB PLANTING

(A) SCHEDULING – PLANTING SHALL NOT COMMENCE UNTIL ALL CONSTRUCTION WORK, GRADING, SOIL IMPROVEMENTS AND SPRINKLER INSTALLATION HAVE BEEN COMPLETED.

(B) PLANT PITS – PLANT PITS SHALL BE DUG WITH LEVEL BOTTOMS, WIDTH TWICE THE DIAMETER OF ROOT BALL & THE DEPTH EQUAL TO THE ROOTBALL SO THAT THE TOP OF THE ROOTBALL IS SLIGHTLY ABOVE FINAL GRADE.

(C) REMOVAL FROM CANS – OPEN CANNED STOCK BY CUTTING CAN VERTICALLY ON TWO OPPOSITE SIDES OF CAN WITH APPROVED INSTRUMENT FOR THE PURPOSE. AN AXE OR SPADE WILL NOT BE PERMITTED.

(D) SPACING – WHEN PLANT MATERIAL IS SPACED IN ROWS, THE TOTAL DIMENSION SHALL BE VERIFIED AND THE PLANTS EQUALLY SPACED WITHIN THE DESIGNATED AREA. WHERE PLANT MATERIAL IS SHOWN IN A "LOOSE" PATTERN, THE CONTRACTOR SHALL SPACE THE PLANTS EXACTLY AS SHOWN PER PLAN, MAINTAINING AN UNEQUAL SPACING.

(E) SETTING – PLANTS SHALL BEAR SAME RELATION TO SOIL LEVEL WHEN PLANTED AS THEY DID WHEN IN CONTAINER. EACH PLANT SHALL BE PLACED IN CENTER OF PLANT PIT.

(F) ROOT GUARD BARRIERS SHALL BE INSTALLED PER DETAIL. GUARDS ARE REQUIRED FOR ALL TREES WITHIN 5 FEET OF PAVING OR STRUCTURES.

(G) PIT BACKFILL:

⊛ 1) EACH PLANT PIT SHALL BE BACKFILLED WITH THE FOLLOWING PREPARED SOIL MIX:
6 PARTS BY VOLUME ON-SITE SOIL
2 PARTS BY VOLUME NITROGEN STABILIZED ORGANIC AMENDMENT DERIVED FROM CEDAR OR REDWOOD (Place in upper 12" of backfill only)
1 LB. 16-20-0 PER CU. YD. OF MIX

2) "GROW POWER" TABLETS IN THE FOLLOWING PROPORTIONS: (Place in upper 12" of backfill)
1 PER ONE GALLON PLANT
3 PER FIVE GALLON PLANT
5 PER FIFTEEN GALLON PLANT
1 PER ½" OF TRUNK DIAMETER OF BOXED AND FIELD-GROWN TREES

(H) BACKFILL PROCEDURE – BACKFILL MATERIAL IN PLANT PITS SHALL BE TAMPED FIRM AND A SHALLOW BASIN FORMED AROUND THE PLANT TO HOLD ENOUGH WATER TO SATURATE THE ROOT BALL AND BACKFILL. WATER PLANTS IMMEDIATELY AFTER PLANTING. DO NOT RAISE BASIN RIM ABOVE SURROUNDING GRADE.

(I) HANDLING – NO MATERIAL SHALL BE PLANTED IF THE BALL IS BROKEN OR CRACKED EITHER BEFORE OR DURING THE PROCESS OF PLANTING.

(J) STAKING OF TREES – TREES SHALL BE SET IN THE PLANT PIT, WITH STAKES DRIVEN 30 INCHES INTO FIRM SOIL NEXT TO ROOT BALL, AND THE PIT BACKFILLED WITH PREPARED SOIL MIX. SECURE TREE TO STAKE WITH TIES PER DETAIL.

X. PREPARATION OF SLOPE (NOT APPLICABLE)

(A) THE LANDSCAPE CONTRACTOR SHALL RETAIN A STATE LICENSED "PEST-CONTROL OPERATOR/ADVISOR" TO EXAMINE THE SITE AND TO SPECIFY THE TYPE AND QUANTITIES TO OF WEED CONTROL MATERIALS REQUIRED. THE RECOMMENDATIONS SHALL BE SUBMITTED TO THE LANDSCAPE ARCHITECT FOR REVIEW. THE LANDSCAPE ARCHITECT WILL THEN SUBMIT THE DATA TO THE OWNER FOR REVIEW AND APPROVAL.

(B) NO MATERIALS OR METHOD SHALL EFFECT THE LANDSCAPE PLANTING OR HYDROSEEDING GERMINATION AND MUST CONFORMCONFORM TO FEDERAL, STATE AND LOCAL REGULATIONS.

(C) THE PEST CONTROL ADVISOR SHALL DETERMINE THE REMOVAL OR NON-REMOVAL OF PERENNIAL GRASSES AND WEEDS EXISTENT IN THE PLANTING AREAS PRIOR TO THE INSTALLATION OF THE IRRIGATION SYSTEM, AFTER WHICH ALL WEEDS SHALL BE REMOVED AND CLEARED FROM THE PLANTING AREAS.

(D) UPON COMPLETION OF THE IRRIGATION SYSTEM AND AFTER ALL EXISTING WEEDS HAVE BEEN REMOVED FROM THE PLANTING AREAS, THE FOLLOWING WEED PREVENTION SHALL BE USED: APPLY A MIXTURE BY SPRAY PER ACRE AS FOLLOWS:

300 LBS./ACRE OF COMMERCIAL FERTILIZER (16-8-8)
100 LBS/ACRE UREA FORMALDEHYDE

WATER ALL AREAS FOUR TIMES DAILY FOR 21 CONSECUTIVE DAYS UNTIL THE WEED SEEDS HAVE GERMINATED. CEASE WATERING FOR THREE DAYS. SPRAY PER PEST CONTROL ADVISOR'S RECOMMENDATIONS A NON-SELECTIVE SYSTEMIC SHALL HERBICIDE TO ERADICATE THE GERMINATING WEED SEEDS. WATER AFTER HERBICIDE APPLICATION ONLY TO PEST CONTROL ADVISOR'S RECOMMENDATIONS.

ALLOW HERBICIDE TO KILL ALL WEEDS. CONTINUE THE WATERING FOR AN ADDITIONAL SEVEN DAYS TO INSURE THAT MOST OF THE WEEDS HAVE DIED. IF PERENNIAL WEEDS OR GRASSES STILL EXIST, RE-WATER FOUR TIMES DAILY FOR AN ADDITIONAL 14 CONSECUTIVE DAYS, OR UNTIL NEW GROWTH APPEARS. RE-APPLY A NON-SELECTIVE HERBICIDE PER PEST CONTROL ADVISOR'S RECOMMENDATIONS REMOVE WEEDS AFTER HERBICIDE HAS HAD SUFFICIENT TIME TO KILL.

XI. SLOPE SEEDING (NOT APPLICABLE)

(A) ALL SEED SHALL BE PRE-SOAKED IN "CATALYTIC PR-MERGE" FOR THE PRESCRIBED AMOUNT OF TIME.

(B) PRIOR TO APPLYING HYDROMULCH/SEED SLURRY, ALL SLOPE AREAS SHALL BE CLEANED OF ALL WEEDS, ROCKS LARGER THAN 2" DIAMETER AND DEBRIS. ALL AREAS SHALL BE RACKED OR "DRAGGED" TO CREATE A ROUGHENED SURFACE TO BETTER RECEIVE THE SEED APPLICATION.

(C) THE SPECIFIED SEED MIX SHALL BE APPLIED AT THE RATE LISTED ON THE PLANS OR PLANT LEGEND.

(D) HYDROMULCH FIBER SHALL BE APPLIED AT 2,000 POUNDS. PER ACRE.

(E) SOIL AND FIBER MULCH BINDERS (TERRA TAC 3 OR ECOLOGY CONTROL) SHALL BE APPLIED WITH THE HYDROMULCH AT 130 POUNDS PER ACRE.

(F) FINN "HST" SHALL BE APPLIED WITH THE HYDROMULCH AT FOUR (4) GALLONS PER ACRE.

⊛ (G) 20-4-4 OR 25-4-8 "SLOW RELEASE" FERTILIZER SHALL BE APPLIED WITH HYDROMULCH SLURRY AT 500 POUNDS PER ACRE.

(H) ALL ADJACENT AREAS, CONCRETE SURFACES OR STRUCTURES SHALL RECEIVE A THOROUGH CLEANING TO REMOVE OVERSPRAY OF HYDROMULCH.

XII. PROTECTION
THE CONTRACTOR SHALL CAREFULLY AND CONTINUOUSLY PROTECT AND MAINTAIN ALL AREAS INCLUDED IN THE CONTRACT UNTIL FINAL ACCEPTANCE OF THE WORK BY THE CITY.

XIII. CLEAN-UP
AT THE COMPLETION OF EACH DAY'S WORK AND PRIOR TO THE CHECK INSPECTION, THE CONTRACTOR SHALL LEGALLY DISPOSE OF ALL TRASH, REFUSE, DEBRIS, CONTAINERS, ETC., OFF THE PREMISES. ALL SCARS, RUTS OR MARS IN THE AREA CAUSED BY HIS WORK SHALL BE REPAIRED AT CONTRACTOR'S EXPENSE.

XIV. MAINTENANCE

(A) AFTER ALL WORK INDICATED ON THE DRAWINGS OR HEREIN SPECIFIED HAS BEEN COMPLETED, INSPECTED AND APPROVED BY THE CITY, THE CONTRACTOR SHALL MAINTAIN ALL IRRIGATION SYSTEMS, AND PLANTED AREAS BY MEANS OF CONTINUOUS WATERING, WEEDING, MOWING, EDGING AND OR OTHER OPERATIONS NECESSARY FOR THE CARE AND UPKEEP FOR A PERIOD OF NINETY (90) DAYS. AT THE END OF THE MAINTENANCE PERIOD ALL PLANT MATERIALS SHALL BE IN A HEALTHY AND UPRIGHT GROWING CONDITION. ALL TREES SHALL BE IN A HEALTHY, UPRIGHT GROWING CONDITION.

(B) ALL PLANTED AREAS SHALL BE KEPT FREE OF DEBRIS AND WEEDS. WEEDS MAY BE CONTROLLED AND ELIMINATED BY EITHER MANUAL OR CHEMICAL MEANS. IN NO EVENT WILL THE PROJECT RECEIVE FINAL APPROVAL AND ACCEPTANCE UNTIL IT IS FREE OF ALL WEEDS AND/OR UNSPECIFIED PLANT MATERIALS.

(C) ALL PLANTED AREAS SHALL BE FERTILIZED AS FOLLOWS: APPLY 16-20-0 COMMERCIAL FERTILIZER AT 10 LBS. PER 1,000 SQUARE FEET ON THE 28TH AND 58TH DAY.

(D) GRASS WHEN THREE INCHES (3") HIGH SHALL BE IMMEDIATELY MOWED TO TWO INCH (2") HEIGHT. AT THE END OF THE MAINTENANCE PERIOD, ALL LAWN AREAS SHALL BE CUT TO SPECIFIED HEIGHT AND NEATLY TRIMMED AND EDGED.

(E) HOSES, MAINTENANCE EQUIPMENT AND MATERIALS SHALL BE NEATLY STORED WHEN NOT IN USE, IN AN AREA AUTHORIZED BY THE OWNER'S ON-SITE AN SUPERINTENDANT.

(F) MAINTENANCE FOREMAN ON THE JOB SHALL BE A COMPETENT ENGLISH-SPEAKING SUPERVISOR, EXPERIENCED IN LANDSCAPE MAINTENANCE AND CAPABLE OF DISCUSSING MATTERS WITH THE CITY INSPECTOR ON THE SITE.

(G) WORKMEN SHALL PRESENT A NEAT APPEARANCE AT ALL TIMES AND SHALL CONDUCT ALL WORK OPERATIONS AND DEALINGS WITH THE PUBLIC IN A DIPLOMATIC AND COURTEOUS MANNER. WORKMEN SHALL BE FULLY CLOTHED AT ALL TIMES IN DRESS SUITABLE FOR THE JOB.

(H) ALL SEEDED TURF AND/OR SLOPE AREAS MUST BE FULLY GERMINATED DISPLAYING VIGOROUS, HEALTHY COVER OF SPECIFIED SPECIES. THERE SHALL BE NO "BARE" AREAS LARGER THAN FOUR SQUARE FEET.

(I) AT THE END OF THE MAINTENANCE PERIOD ALL IRRIGATION EQUIPMENT SHALL BE IN COMPLETE OPERATIONAL CONDITION. THE CONTROLLER SHALL BE PROGRAMMED ACCORDING TO THE IRRIGATION PLANS. ALL "AS-BUILT" IRRIGATION DRAWINGS SHALL COMPLETED IN A LEGIBLE MANNER AND READY FOR TURN-OVER. ALL PLANT COUNTS SHALL BE VERIFIED FOR CONFORMANCE TO PLANTING PLANS.

XV. GUARANTEES

(A) GUARANTEES AFTER COMPLETION OF MAINTENANCE PERIOD AND FINAL ACCEPTANCE WILL BE CONTINGENT ON OWNER'S PROPER CONTINUATION OF MAINTENANCE PROGRAM.

(B) THE CONTRACTOR, IN PROTECTING HIS OWN INTERESTS, IS OBLIGATED TO PERIODICALLY CHECK WORK AREAS DURING HIS GUARANTEE PERIOD TO INSURE PROPER MAINTENANCE PROCEDURES ARE BEING IMPLEMENTED.

(C) IN CASE OF NEGLIGENT OR IMPROPER MAINTENANCE, THE CONTRACTOR SHALL STATE IN WRITING TO THE OWNER, HIS OBSERVATIONS AND RECOMMENDATIONS. ANY CLAIMS NOT IN WRITING WILL NOT BE CONSIDERED.

(D) TREES SHALL BE GUARANTEED BY THE CONTRACTOR TO "LIVE AND GROW" IN AN "ACCEPTABLE, UPRIGHT POSITION" FOR A PERIOD OF ONE (1) YEAR AFTER COMPLETION OF THE SPECIFIED MAINTENANCE PERIOD AND/OR FINAL ACCEPTANCE. DEFINITION OF "LIVE AND GROW" AND "ACCEPTABLE, UPRIGHT POSITION" SHALL MEAN THAT THE TREE MUST, DURING THE GUARANTEE PERIOD, SUSTAIN A HEALTHY, VIGOROUS APPEARANCE. IT SHALL NOT DEFOLIATE MORE THAN 30% NOR SHALL 30% OF THE FOLIAGE BE DRIED AND UNHEALTHY IN APPEARANCE. IF THE TREE, DURING THE GUARANTEE PERIOD DOES NOT SUSTAIN THIS SPECIFIED APPEARANCE, IT SHALL BE REMOVED AND REPLACED BY A TREE EQUAL TO THE ORIGINAL SPECIFICATION. ANY DAMAGE TO CONTIGUOUS PLANTING, STRUCTURES, LIGHTING OR SPRINKLERS DURING REPLACEMENT OPERATIONS SHALL BE REPLACED AND/OR REPAIRED AT THE CONTRACTOR'S EXPENSE.

(E) ALL CUTTINGS, SOD AND CONTAINER PLANTS UP TO AND AND INCLUDING 15 GALLON SIZE SHALL BE GUARANTEED BY THE CONTRACTOR AS TO GROWTH AND HEALTH FOR A PERIOD OF NINETY (90) DAYS AFTER COMPLETION OF MAINTENANCE PERIOD AND FINAL ACCEPTANCE.

(F) THE CONTRACTOR SHALL, WITHIN FIFTEEN (15) DAYS OF WRITTEN NOTIFICATION BY OWNER, REMOVE AND REPLACE ALL GUARANTEED PLANT MATERIALS WHICH FOR ANY REASON FAIL TO MEET THE REQUIREMENTS OF THE GUARANTEE. REPLACEMENT SHALL BE MADE WITH PLANT MATERIALS ORIGINALLY SPECIFIED AND SHALL MEET ORIGINAL GUARANTEES.

REFERENCE ONLY

LANGDON WILSON
ARCHITECTURE PLANNING INTERIORS
18800 VON KARMAN AVENUE, SUITE 200
IRVINE, CALIFORNIA 92612-1517
949 · 833 · 9193

FRANK RADMACHER ASSOCIATES, INC.
Landscape Architects
PHONE (714) 832-1774 FAX (714) 832-5721
14841 Yorba Street, Suite 204 · Tustin, CA 92780
EMAIL: F-R-A@PACBELL.NET

CITY OF FONTANA
CIVIC CENTER
8353 SIERRA AVENUE
FONTANA, CALIFORNIA

REV.	DATE	ISSUED FOR	REV.	DATE	ISSUED FOR
				2-06-06	PLAN CHK. RESUB.
				3-27-06	BID SET PERMIT SET
				4-17-06	BID SET PERMIT SET

Stamp
LICENSED LANDSCAPE ARCHITECT
STATE OF CALIFORNIA
Signature
Renewal Date
Date

PLAN CHECK SUBMITTAL 4/17/06 BID SET 4/17/06 PERMIT SET 4/17/06

PLANTING DETAILS & SPECIFICATIONS
N. T. S.

L009
OF

FRA JOB NO. 2791

\\Iridium\2700's\2791 Fontana City Hall\Plant Detail Specs.dwg, 4/13/2006 3:15:45 PM, HP800.pc3, 1:212.494, gp

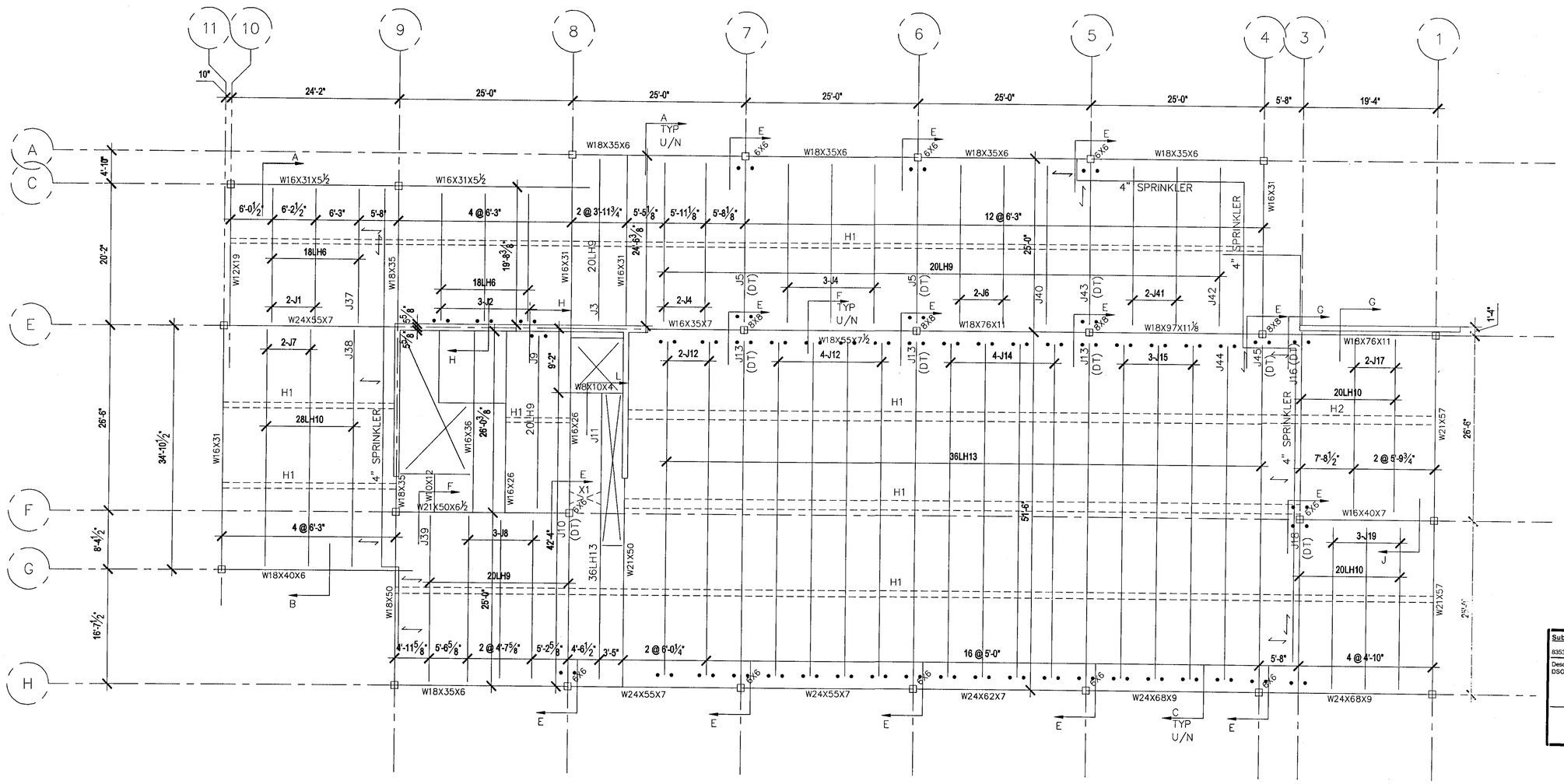

SPRINKLERS

4" SPRINKLER (TYP.) = 18 PLF
SEISMIC BRACE ⟷ = 1300LBS

A FALL CAUSING SERIOUS INJURY OR DEATH MAY RESULT FROM FAILURE TO FOLLOW ALL SAFETY PRECAUTIONS

- Column joists with this tag HAVE NOT been designed to support an employee without bridging installed.
- The Column joists with this tag ARE NOT OSHA COLUMN JOISTS DESIGNED FOR STABILITY per Subpart R 1926.757 (3).
- Special erection methods MUST be incorporated.
- DO NOT allow employees on joists with this tag until adequately stabilized.

2ND FLOOR JOISTS PLACEMENT PLAN

SCALE: NTS

Submittal Date: 04/18/2007 (BUILDING & SAFETY)
8353 SIERRA AVE 1st PC
Description: PLAN CHECK FOR ROOF AND FLOOR JOISTS FOR DSO BUILDING ADDITION

X-5

PC 07-02402

APPROVED
APR 23 2007
BUILDING & SAFETY
CITY OF FONTANA

THIS DOCUMENT HAS BEEN REVIEWED FOR COMPATIBILITY WITH DESIGN CONCEPT ONLY

KA 04/10/07

BUILDING PERMITS ARE NOT VALID FOR "OFF-SITE" IMPROVEMENTS SEPARATE CONSTRUCTION PERMITS ARE REQUIRED FROM THE PUBLIC WORKS DEPARTMENT.
THE ISSUANCE OR GRANTING OF A PERMIT BASED ON THE APPROVAL OF THESE PLANS SHALL NOT BE CONSTRUED TO PERMIT OR APPROVE ANY VIOLATION OF THE APPLICABLE CODES OR ORDINANCES. NO PERMIT PRESUMED TO GIVE AUTHORITY TO VIOLATE OR CANCEL THE PROVISIONS OF SUCH CODES SHALL BE VALID.
REVIEWED BY
APPROVED
REVIEWED BY
DATE
Approval of these plans shall not be construed to be a permit for, or an approval of any violation of any of the provisions of the state or local laws. One set of approved plans must be kept on the job until completion.
WILLDAN

Not to supersede the approved plans

Reviewed
Rejected
No exception taken
Revise and Resubmit
Approved as noted
Approved as submitted

Review is only for conformance with the design concept of the project and general compliance with information included in the contract documents.

Contractor is responsible for correlating and confirming dimensions at the job site, choice of fabrication processes and techniques of construction, coordination of his work with that of other trades and performing the work in a safe and satisfactory manner.

The consultant has not reviewed and is not responsible for substitutions and/or deviations from the contract documents not clearly noted by the contractor and specifically accepted by the consultant in writing.

Signature:
Date: 03-30-07
JCM Group/Heery International, Inc.
6420 Wilshire Blvd., 18th Floor • Los Angeles, CA 90048
909/350-65

RECEIVED
APR 16 2007
Heery International, Inc.

RECEIVED
APR 11 2007
Heery International, Inc.

RECEIVED
MAR 30 2007
Heery International, Inc

CITY OF FONTANA DSO BUILDING
Spec. Section 05215 Sub-Section 1.04.A
Steel Joists – Shop Drawings
Architect: Langdon Wilson C.M.: Heery International
Contractor: Earl Corporation Subcontractor: CraneVeyor
CHECKED AND REVIEWED BY GENERAL CONTRACTOR. APPROVAL SUBJECT TO ARCHITECTURAL APPROVAL. THIS REVIEW DOES NOT RELIEVE THE SUBCONTRACTOR AND/OR MANUAL SUPPLIER FROM STRICT COMPLIANCE WITH CONTRACT DOCUMENTS.

By Earl Corporation Submittal No. 31R2.1 Dated 3/29/07

FIELD USE

B&S APPROVED

REVISION	DESCRIPTION	DATE	BY

WELDS: 2 1/8" FILLET WELD U.N.O.
PAINT: GRAY OXIDE
PER SJI STANDARD

QUINCY JOIST COMPANY
QUINCY, FLORIDA
620 ROTH, 32653-0.551
PHONE: 850-875-1075
FAX: 850-875-1077
WWW.QUINCYJOIST.COM
BUCKEYE, AZ
2828 E. ALLEGHENY BLVD.
BUCKEYE, AZ 85326-9436
PHONE: 623-386-1880
FAX: 623-386-1883

NO. PRINTS	DATE
5	11/6
5	12/20
5	3/9/07
5	

PROJECT NAME & LOCATION
DEVELOPMENT SERVICES
FONTANA, CA

CUSTOMER :	CRANEVEYOR CORP.
JOB NO.	4254-06
DRAWN BY:	DL
DATE:	OCT 17/06
CHECKED BY:	JM/JT

SHEET 1 OF 4

J-1

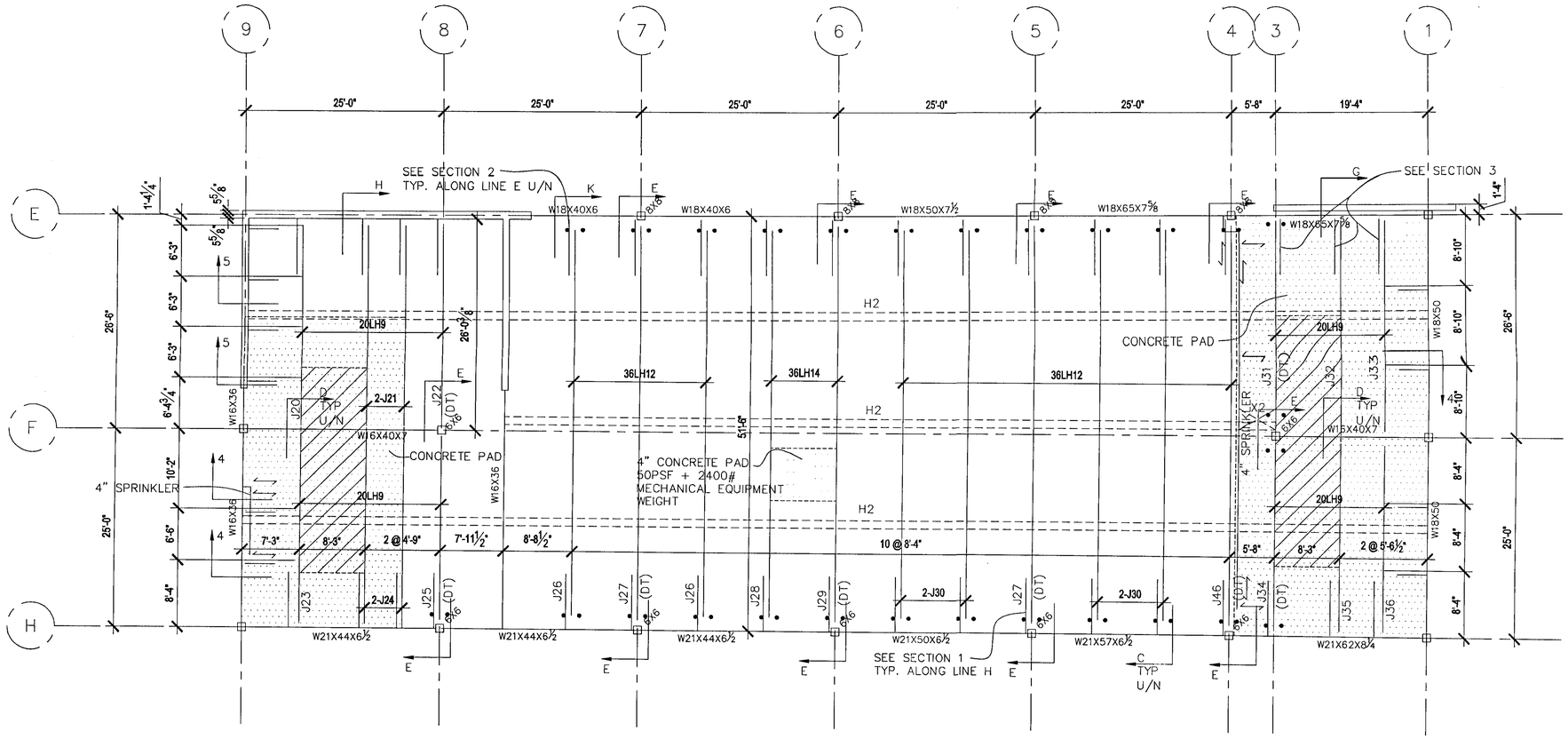

SPRINKLERS

4" SPRINKLER (TYP.) = 18 PLF
SEISMIC BRACE ⟷ = 1300LBS

UNITS & PAD LOADS ARE INCLUDED IN THE ADD'L VERTICAL LOADS UNLESS NOTED OTHERWISE

JOISTS ARE COVERED WITH CONCRETE SLAB

A FALL CAUSING SERIOUS INJURY OR DEATH MAY RESULT FROM FAILURE TO FOLLOW ALL SAFETY PRECAUTIONS.

- Column joists with this tag HAVE NOT been designed to support an employee without bridging installed.
- The Column joists with this tag ARE NOT OSHA COLUMN JOISTS DESIGNED FOR STABILITY per Subpart R 1926.757 (3).
- Special erection methods MUST be incorporated.
- DO NOT allow employees on joists with this tag until adequately stabilized.

ROOF JOISTS PLACEMENT PLAN

SCALE: NTS

THIS DOCUMENT HAS BEEN REVIEWED FOR GENERAL COMPATIBILITY WITH DESIGN CONCEPT AND COMPLIANCE WITH DESIGN DOCUMENTS IS NOTED.

X COMPLIANCE WITH DESIGN CONCEPT
SPECIFICATIONS AND DESIGN DOCUMENTS
NOT REVIEWED

KA 04/10/07

APPROVED
REVIEWED BY _____ DATE _____
Approval of these plans shall not be construed to be a permit for, or an approval of any violation of any of the provisions of the state or local laws. One set of approved pla must be kept on the job until completion
WILLDAN

APPROVED
APR 23 2007
BUILDING & SAFETY
CITY OF FONTANA

RECEIVED
APR 16 2007
Heery International, Inc

RECEIVED
MAR 30 2007
Heery International, Inc

FIELD USE

NO.	PRINTS	DATE
5	APP	11/8
5	RESUB	12/20
5	FIELD	3/8/07

REVISION	DESCRIPTION	DATE	BY

WELDSZ 1/8"
FILLET WELD U.N.O.
PAINTED
GRAY OXIDE
PER Sji STANDARD

QUINCY JOIST COMPANY
BUCKEYE, AZ
2250 N. 4th STREET
BUCKEYE, AZ 85326
PHONE: 623-386-1890
FAX: 623-386-1890
QUINCY, FLORIDA
2500 W. JEFFERSON ST.
QUINCY, FLORIDA 32351
PHONE: 850-875-1197
FAX: 850-875-1197
WWW.QUINCYJOIST.COM

PROJECT NAME & LOCATION
DEVELOPMENT SERVICES
FONTANA, CA

CUSTOMER :	CRANEVEYOR CORP.
JOB NO.	4-234-06
DRAWN BY:	CC
DATE:	OCT. 17/06
CHECKED BY:	JM/JT

SHEET 2 OF 4

J-2

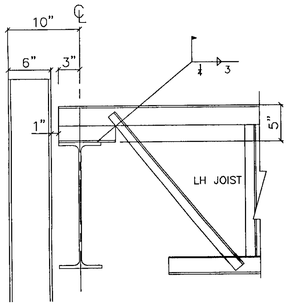

SECTION A

REF. 11/S7.1

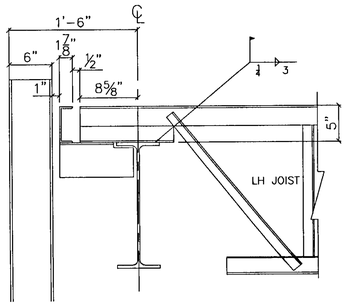

SECTION B

REF. 7/S7.1

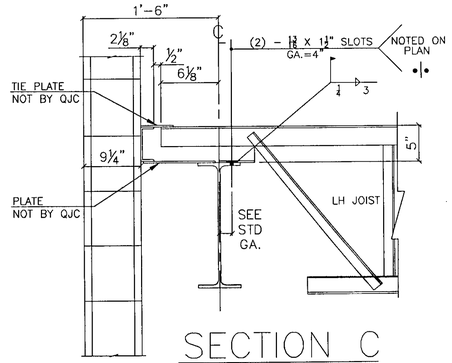

SECTION C

REF. 14/S5.4

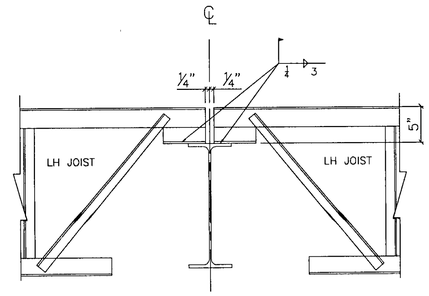

SECTION D

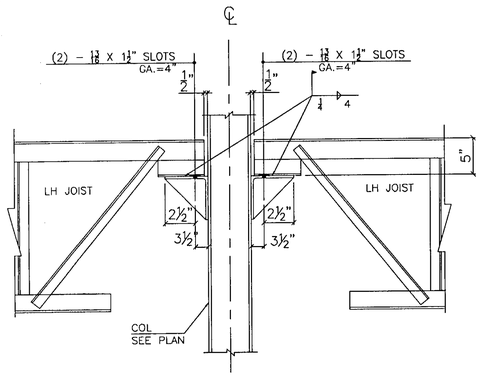

SECTION E

REF: SKS-9

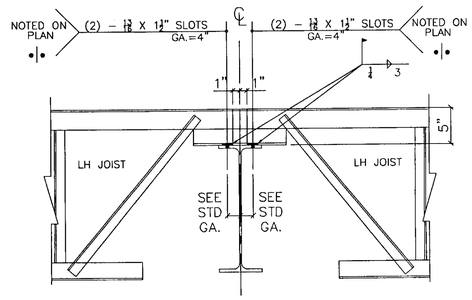

SECTION F

STAGGERED JOISTS

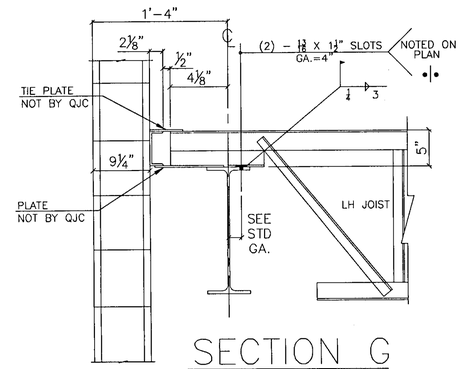

SECTION G

REF. 14/S5.4

GENERAL NOTES

1. ALL JOIST AND GIRDERS SUPPLIED BY QUINCY JOIST COMPANY (QJC) CONFORM TO STEEL JOIST INSTITUTE SPECIFICATIONS OF THE LATEST EDITION.
2. CAMBER STANDARD SJI
   ALL SUPPLIERS BE ADVISED CAMBER & DEFLECTION MUST BE CONSIDERED WHEN DETAILING FRAMING ADJACENT OR ATTACHING TO JOIST. SEE SJI SPECS. FOR STANDARD CAMBER.
3. QJC DOES NOT SUPPLY ANY MISC. FRAMING FOR FIELD ATTACHMENT TO JOISTS AND/OR GIRDERS. ONLY ITEMS SHOWN ON BILL OF MATERIALS ARE FURNISHED BY QJC.
4. QJC PRODUCTS SHALL NOT BE MODIFIED WITHOUT WRITTEN CONSENT FROM QJC.
5. TAG END OF JOIST OR GIRDER IS INDICATED BY LOCATION OF PIECE MARKS ON THE PLAN OR ←——E——→
6. DO NOT APPLY CONSTRUCTION LOADS TO JOIST UNTIL THEY ARE COMPLETELY ANCHORED AND BRIDGED.
7. THESE DWG'S TO BE USED ONLY FOR JOIST & GIRDER ERECTION.
8. LOADS–QUINCY JOIST CO. MAKES NO SPECIAL DESIGN PROVISIONS FOR ADDITIONAL LOADS OR CONCENTRATED LOADS SUCH AS MECHANICAL UNITS MOUNTED ON JOISTS, UNLESS NOTED ON THESE DRAWINGS
9. UNDER NO CIRCUMSTANCES ARE CONSTRUCTION LOADS OF ANY DESCRIPTION TO BE PLACED ON UNBRIDGED JOISTS. CONSULT THE ERECTION DRAWINGS FOR THE NUMBER OF ROWS AND TYPE OF BRIDGING REQUIRED. THE JOISTS ARE BRACED BY THE BRIDGING DURING THE CONSTRUCTION PERIOD. WITHOUT THIS BRIDGING BEING INSTALLED PRIOR TO THE APPLICATION OF ANY CONSTRUCTION LOADS, THE JOISTS MAY FAIL AND SERIOUS BODILY INJURY COULD RESULT.
10. BRIDGING:
    –WELDED HORIZONTAL TOP AND BOTTOM CHORDS NOTED– ====
    –WELDED HORIZONTAL FIRST BOTTOM CHORD PANEL POINTS FROM BOTH ENDS OF JOIST DUE TO UPLIFT NOTED– ----
    – X–WELDED DIAGONAL NOTED
    – X–BOLTED DIAGONAL NOTED
11. JOIST CHORDS ARE NOT DESIGNED FOR CONCENTRATED LOADS. EITHER PLACE LOADS AT PANEL POINTS OR FIELD WELD AN ADDITIONAL MEMBER FROM POINT OF LOAD TO NEAREST PANEL POINT ON OPPOSITE CHORD AT NO EXPENSE TO QJC.
12. ONE ROW OF BRIDGING AT FIRST AND LAST BOTTOM CHORD PANEL POINTS OF ROOF JOIST IS FURNISHED DUE TO UPLIFT.
    PLEASE NOTE: DO NOT INSTALL UPLIFT BRIDGING IN FLOOR OR MEZZANINE JOIST.

NET UPLIFT =0 PSF

13. QUINCY JOIST STANDARD GRAY OXIDE
    QUINCY JOIST STANDARD S.J.I. WELD.
14. STEEL DETAILER MUST COORDINATE HIS DRAWINGS WITH JOIST PLANS
15. ALL JOISTS SHALL BE DESIGNED, FABRICATED AND ERECTED IN ACCORD WITH 2006 CBC
16. ALL JOISTS TO BE DESIGNED FOR AN ADDITIONNAL 0.5K DEAD LOAD POINT LOAD AT ANY TOP OR BOTTOM CHORD PANEL POINT
17. ALL JOISTS TO BE DESIGNED FOR THE FOLLOWING :
    FLOOR : 36LH JOISTS TO BE DESIGNED FOR AN ADDITIONAL 5.6K TOP CHORD AXIIAL LOAD (SEISMIC) WITH 220PLF VERTICAL DEAD LOAD.
    20LH JOISTS TO BE DESIGNED FOR AN ADDITIONAL 6.2K TOP CHORD AXIAL LOAD (SEISMIC) WITH 242PLF VERTICAL DEAD LOAD.
    ROOF : 36LH JOISTS TO BE DESIGNED FOR AN ADDITIONAL 6.5K TOP CHORD AXIIAL LOAD (SEISMIC) WITH 333PLF VERTICAL DEAD LOAD.
    20LH JOISTS TO BE DESIGNED FOR AN ADDITIONAL 5.8K TOP CHORD AXIAL LOAD (SEISMIC) WITH 840PLF VERTICAL DEAD LOAD.
18. HORIZONTAL BRIDGING : H1–L 1¾"X1¾"X⅛"
    H2–L2¾"X2¾"
    X1–1¾"X1¾"X 3/64"
    X2–1¾"X1¾"X 3/64"

A FALL CAUSING SERIOUS INJURY OR DEATH MAY RESULT FROM FAILURE TO FOLLOW ALL SAFETY PRECAUTIONS

- Column joists with this tag HAVE NOT been designed to support an employee without bridging installed.
- The Column joists with this tag ARE NOT OSHA COLUMN JOISTS DESIGNED FOR STABILITY per Subpart R 1926.757 (3).
- Special erection methods MUST be incorporated.
- DO NOT allow employees on joists with this tag until adequately stabilized.

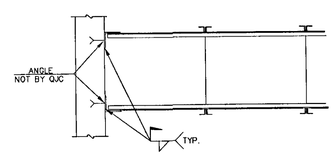

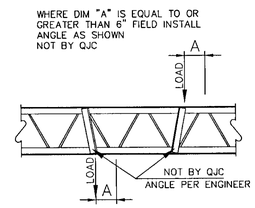

TYPICAL JOIST STRUT DETAIL

PLANS CONFORM TO THE CITY'S CODES AND THE FOLLOWING IS NOTED:
X CONFORM TO FIELD CONDITIONS
CONTAINS ... NON-CONFORMING REVISIONS
NON-CONFORMING REVISE & RESUBMIT
KA 04/10/07

APPROVED
APR 23 2007
BUILDING & SAFETY
CITY OF FONTANA

RECEIVED
APR 16 2007
Heery International, Inc.

RECEIVED
MAR 30 2007
Heery International, Inc.

APPROVED
REVIEWED BY ____ DATE
Approval of these plans shall not be construed to be a permit for, or an approval of any violation of any of the provisions of the state or local laws. One set of approved plans must be kept on the job until completion
WILLDAN

FIELD USE

NO.	PRINTS	DATE
5	APP	11/3
5	RESUB	12/20
5	FIELD	3/9/07

REVISION	DESCRIPTION	DATE	BY

WELDSZ 1/8"
FILLET WELD U.N.O.
PAINT:
GRAY OXIDE
PER SJI STANDARD

QUINCY JOIST COMPANY
QUINCY, FLORIDA
BUCKEYE, AZ

PROJECT NAME & LOCATION
DEVELOPMENT SERVICES
FONTANA, CA

CUSTOMER :	CRANEVEYOR CORP.
JOB NO.	4254-06
DRAWN BY:	DL
DATE:	OCT 17/06
CHECKED BY:	JM/JT

SHEET 3 OF 4

J-3

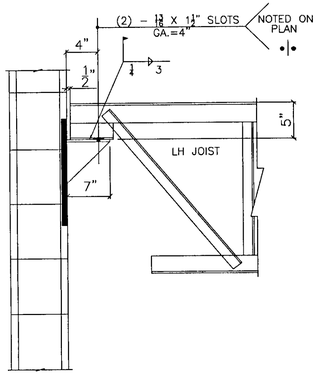

SECTION H
REF. SKS-11, 4/S5.4

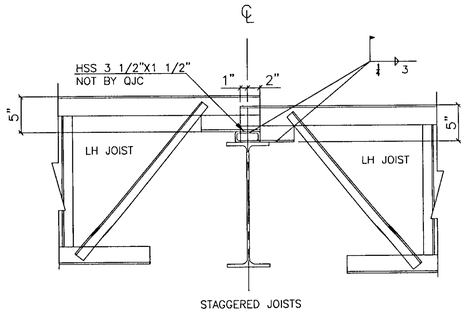

SECTION J
REF. 2/S5.2

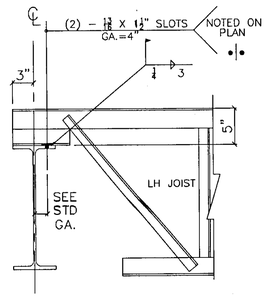

SECTION K
REF. 8/S5.5

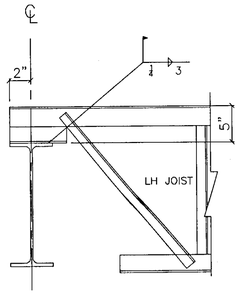

SECTION L

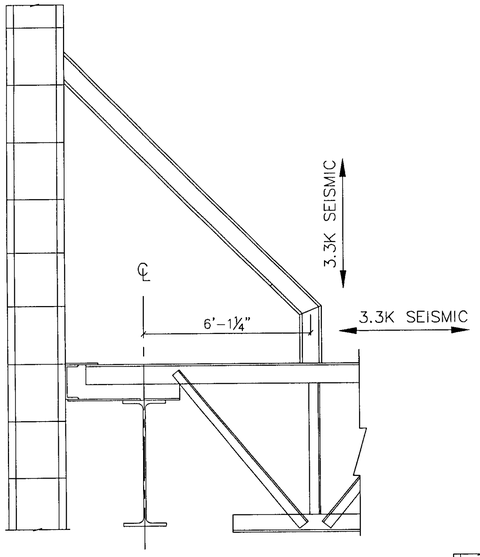

SECTION 1
REF. 10/S5.3

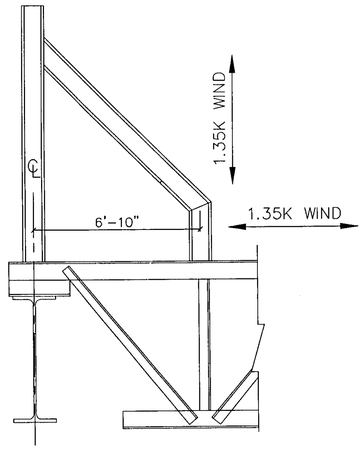

SECTION 2
REF. 8/S5.5

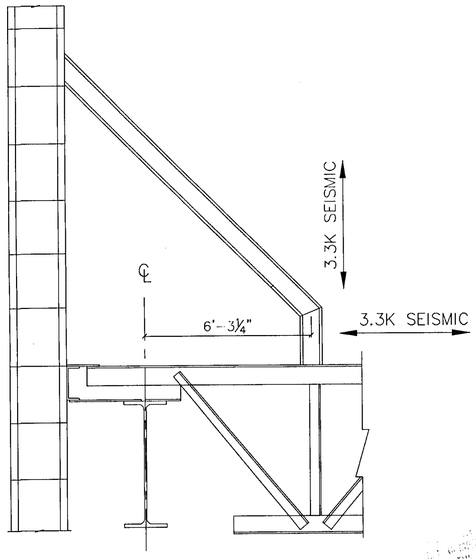

SECTION 3
REF. 10/S5.3

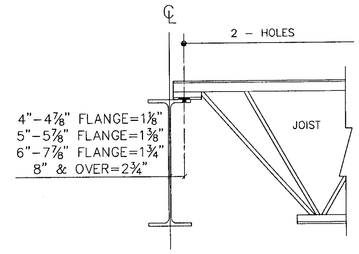

STANDARD GAUGES

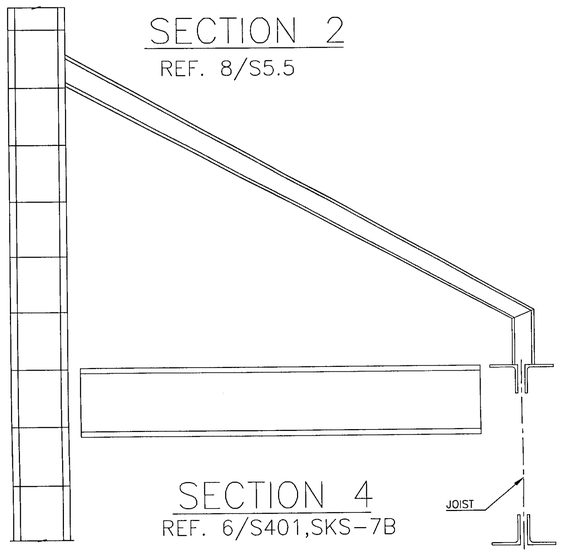

SECTION 4
REF. 6/S401,SKS-7B

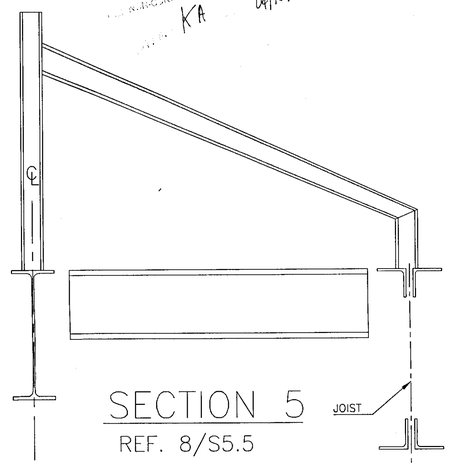

SECTION 5
REF. 8/S5.5

A FALL CAUSING SERIOUS INJURY OR DEATH MAY RESULT FROM FAILURE TO FOLLOW ALL SAFETY PRECAUTIONS

- Column joists with this tag HAVE NOT been designed to support an employee without bridging installed.
- The Column joists with this tag ARE NOT OSHA COLUMN JOISTS DESIGNED FOR STABILITY per Subpart R 1926.757 (3).
- Special erection methods MUST be incorporated.
- DO NOT allow employees on joists with this tag until adequately stabilized.

X KA 04/10/07

APPROVED
APR 23 2007
BUILDING & SAFETY
CITY OF FONTANA

APPROVED
REVIEWED BY _____ DATE
Approval of these plans shall not be construed to be a permit for, or an approval of any violation of any of the provisions of the state or local laws. One set of approved pla must be kept on the job until completion
WILLDAN

RECEIVED
APR 16 2007
Heery International, Inc.

RECEIVED
MAR 30 2007
Heery International, Inc.

FIELD USE

NO.	PRINTS	DATE
5	APP	11/3
5	RESUB	12/20
5	FIELD	3/9/07

REVISION	DESCRIPTION	DATE	BY

WELDSZ 1/8"
FILLET WELD U.N.O.
PAINT:
GRAY OXIDE
PER SJI STANDARD

QUINCY JOIST COMPANY
QUINCY, FLORIDA
BUCKEYE, AZ.
WWW.QUINCYJOIST.COM

PROJECT NAME & LOCATION
DEVELOPMENT SERVICES
FONTANA, CA

CUSTOMER :	CRANEVEYOR CORP.
JOB NO.	4254-06
DRAWN BY:	DL
DATE:	OCT 17/06
CHECKED BY:	JN/JT

SHEET 4 OF 4

J-4